TECHNICAL DATA

DesignMax DM2C-LP
in-ceiling loudspeaker

PROFESSIONAL

Product Overview

A complete loudspeaker assortment to enhance any space, DesignMax loudspeakers offer rich lows, and clear, intelligible highs — along with premium aesthetics that complement any commercial sound installation. The 20-watt DesignMax DM2C-LP loudspeaker makes it easy to bring great sound to tight spaces. Ideal for background music, the DM2C-LP loudspeaker features a 2.25-inch transducer and 85 Hz – 19 kHz frequency range. The in-ceiling DM2C-LP has a low-profile backcan and is installed easily via QuickHold mounting arms.



Key Features

Combine DesignMax models to complete any design, big or small — 12 loudspeakers to mix and match, from 2-inch, low-profile models to 8-inch, high-SPL compression-driver loudspeakers and outdoor-rated options.

Deliver instantly impressive sound with custom Bose drivers — no DSP or EQ required. For even better sound, use select Bose DSPs and amplifiers to enable Bose loudspeaker EQ and SmartBass processing, which expands performance and response at any listening level.

Blend with any room design with elegant form factors, minimum-bezel grilles available in black or white, and removable logos.

Reduce installation time with the patented QuickHold mounting system, which also reduces strain, hassle, and the chance of product damage.

Install easily with industry-standard accessories — all models include Euroblock connectors; in-ceiling models include plenum-rated backcans, tile bridges, and front-access audio wiring that makes installation and troubleshooting easier.

Install in confined ceiling spaces with low-profile backcan measuring just 10 centimeters (3.9 inches) high.

Technical Specifications

SINGLE LOUDSPEAKER PERFORMANCE		
Frequency Response (-3 dB) [1]	95 – 18,000 Hz	
Frequency Range (-10 dB) [1]	85 – 19,000 Hz	
Nominal Coverage Angle (1 - 4 kHz)	150° conical	
Nominal Coverage Angle (1 - 10 kHz)	140° conical	
	AES component test [4]	**Bose extended-lifecycle test [5]**
Power Handling, long-term continuous	20 W	16 W
Power Handling, peak	80 W	64 W
Sensitivity (SPL/ 1W @ 1 m) [2]	84 dB	84 dB
Calculated Maximum SPL @ 1 m [3]	97 dB	96 dB
Calculated Maximum SPL @ 1 m, peak	103 dB	102 dB
Loudspeaker EQ	Not Required, Bose EQ voicing and SmartBass processing available	
Recommended High-Pass Protection	85 Hz with recommended 24 dB / octave filter	
Transformer taps	70V: 1.2, 2.3, 4.5, 9 W, bypass 100V: 2.3, 4.5, 9 W, bypass	
TRANSDUCERS		
Full-Range Driver	1 x 2.25-inch woofer (57 mm)	
Nominal Impedance	16 ohms (transformer bypass)	

DesignMax DM2C-LP
in-ceiling loudspeaker

PHYSICAL	
Enclosure Material	Engineered plastics front baffle with integrated steel formed backcan
Grille	Magnetically attached perforated steel, powder-coated finish, paintable, with safety-tether
Logo	Rotatable, removable
Color	Black: RAL 9005, White: Bose Arctic White, similar to RAL 9003, Paintable
Environmental	Indoor only
Safety Agency	UL-1480A, S5591/ UL Listed, in compliance with UL2043 for plenum-space installation, NFPA70 & NFPA90-A, CE compliant
Operating Temperature Range	0 °C to 50 °C (52 °F to 122 °F)
Connectors	Euroblock 6-pin connector with loop-through, front-baffle mounted. Accepts 18 AWG ($0.8\ mm^2$) to 14 AWG ($2.5\ mm^2$) size wire
Wire / Conduit Entry	Top and side wire entry point knockouts allow for 9.5 mm (3/8 in) conduit
Suspension / Mounting	Two (2) QuickHold, spring-loaded mounting arms plus two (2) safety cable tabs
Product Dimensions (Grille Diameter × Depth)	198 × 110 mm (7.8 × 4.3 in)
Backcan Dimensions (Diameter × Depth)	155 × 99 mm (6.1 × 3.9 in), low-profile backcan
Cutout size (Diameter)	165 mm (6.5 in)
Maximum Ceiling Thickness	39 mm (1.5 in)
Net Weight, Loudspeaker with grille (single)	1.6 kg (3.6 lb)
Net Weight, Tile Bridge (single)	0.7 kg (1.6 lb)
Shipping Weight, Pair	5.9 kg (13.2 lb)
Included Accessories	Adjustable Tile-Bridge, template
Optional Accessories	Rough-in 6-pack for new construction
PRODUCT CODES	
815011-0110	DESIGNMAX DM2C-LP PAIR BLK
815011-0210	DESIGNMAX DM2C-LP PAIR WHT

Footnotes
(1) Frequency response and range measured on-axis in half-space environment with Bose EQ voicing
(2) Sensitivity measured on-axis in half-space environment averaged 100 Hz – 10 kHz using recommended High-Pass protection
(3) Maximum SPL calculated from sensitivity and power handling specifications, exclusive of power compression.
(4) AES standard 2-hour duration with IEC system noise
(5) Bose extended-lifecycle test using pink noise filtered to meet IEC268-5, 6-dB crest factor, 500-hour duration.
(6) Measured in whole-space conditions

For additional specifications and application information, please visit PRO.BOSE.COM.
Specifications subject to change without notice. 09/2020

DesignMax DM2C-LP
in-ceiling loudspeaker

On-Axis Frequency Response

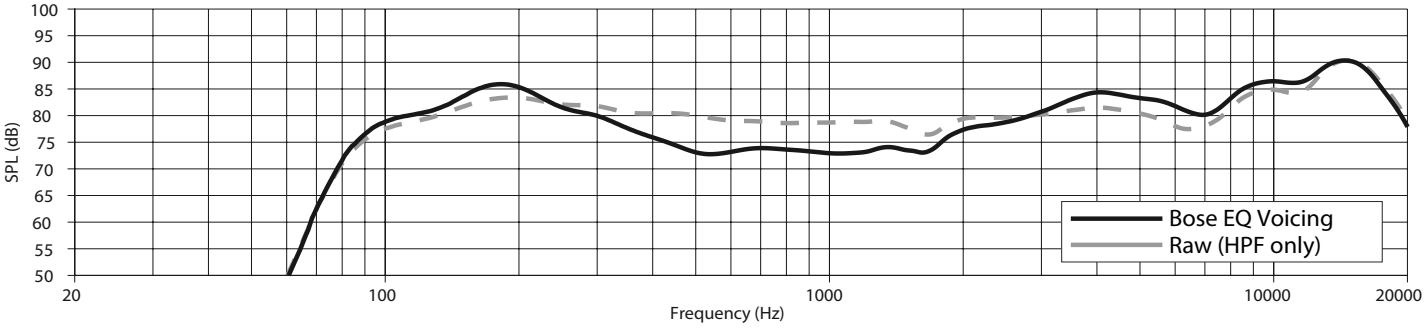

Impedance

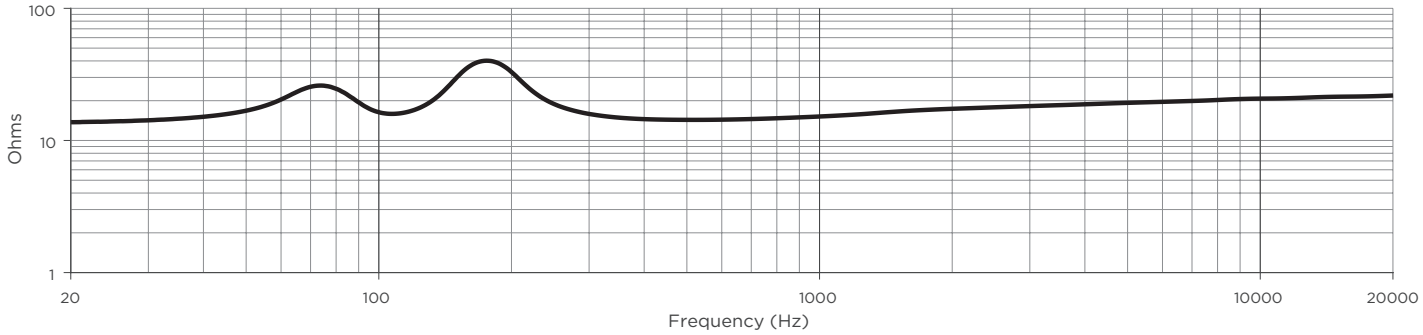

Beamwidth [6]

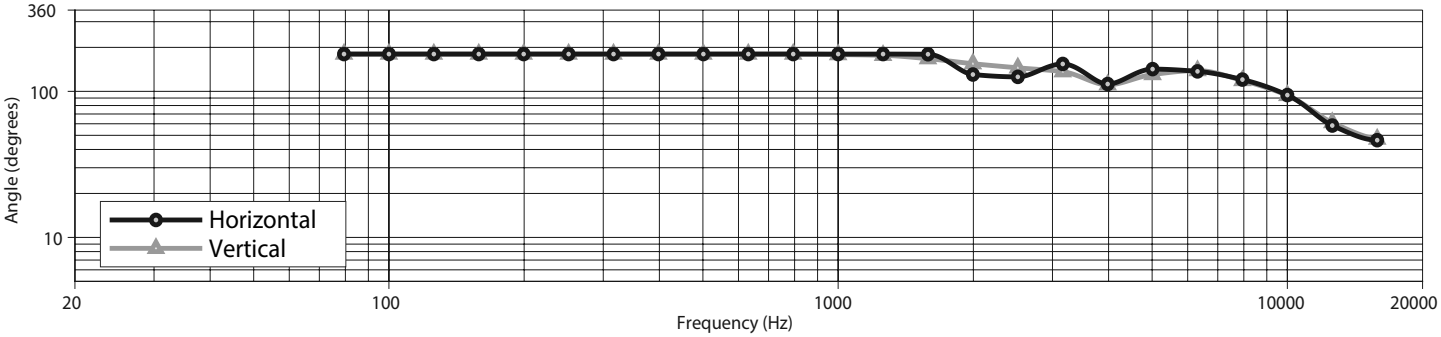

For additional specifications and application information, please visit PRO.BOSE.COM.
Specifications subject to change without notice. 09/2020

DesignMax DM2C-LP
in-ceiling loudspeaker

Dimensions

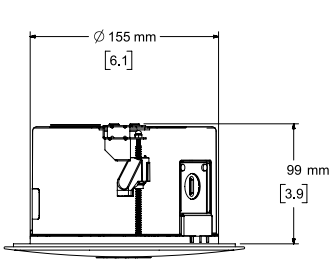

Side View

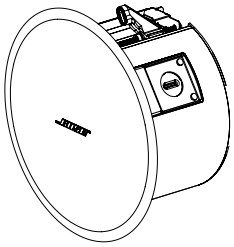

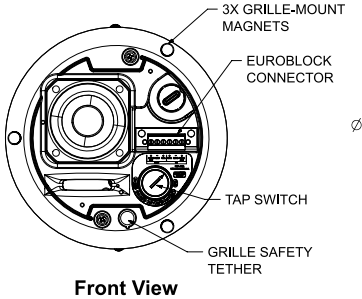

Front View
GRILLE REMOVED FOR CLARITY

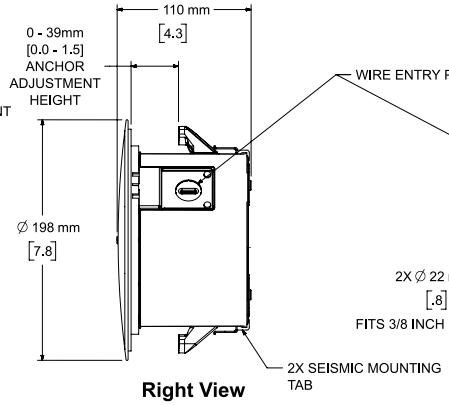

Right View
DIMENSIONS APPLY TO BOTH SIDES

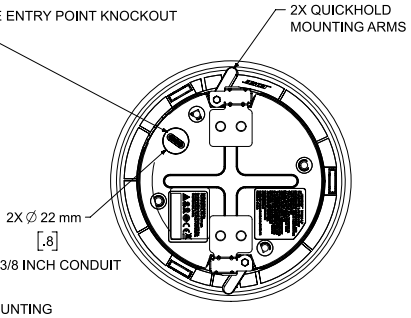

Rear View

NOTES:
1. DIMENSIONS ARE IN MILLIMETERS OVER INCHES
2. WEIGHT APPROX 1.63kg [3.6lbs]

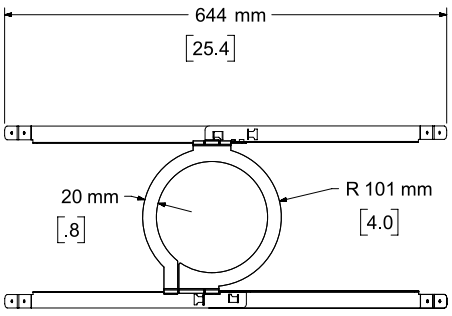

Top View

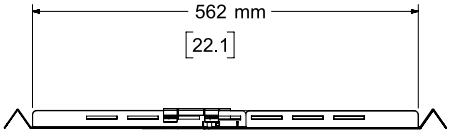

Front View

For additional specifications and application information, please visit PRO.BOSE.COM.
Specifications subject to change without notice. 09/2020