Brand of NTN corporation

Technical data

UCPLE208

Bearing units



Grey cast housing, radial insert ball bearing with socket set screws,seal with slinger

KIT CONTENT

UC.208.G2, PLE208

VISUAL (S)

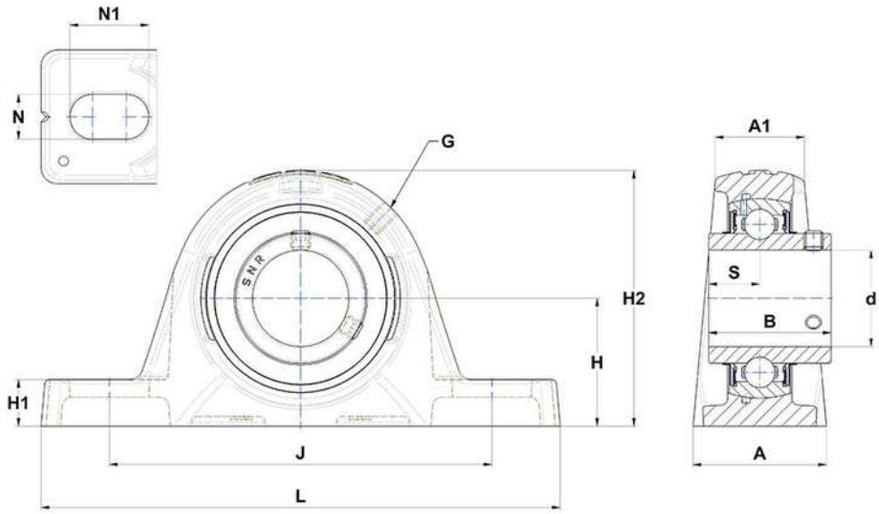

PRODUCT DEFINITION

Brand	SNR
A - Housing width	51 mm
A1 - Housing top width	34,5 mm
B - Width of Inner Ring	49,2 mm
d - Shaft diameter	40 mm
G - Grease fitting	M6x1

PRODUCT DEFINITION	
H - Distance mounting base to centerline spheric. seating diam.	49,2 mm
H1 - Housing foot height	18,5 mm
H2 - Housing height	98,5 mm
J - Mounting holes distance	137,5 mm
L - Housing length	180,5 mm
N - Mounting hole dimension	14 mm
N1 - Mounting hole length	24,5 mm
S - Distance front side/bearing centre	19 mm

PRODUCT PERFORMANCE	
C - Dynamic load rating	29600000 mN
C0 - Static load rating	18200000 mN
Operating temperature min.	253,15 °K
Operating temperature max.	373,15 °K

OTHER FEATURES	
Mass	1,94 kg
Recommended tightening torque for set screw	11.5 N-m