MOTOR PROTECTION CIRCUIT BREAKERS



Lovato electric

ENERGY AND AUTOMATION



MOTOR PROTECTION CIRCUIT BREAKERS

SM... SERIES

IE3 READY

LOVATO Electric motor protection circuit breakers are suitable for the new IE3 high-efficiency motors.

Lovato electric

ENERGY AND AUTOMATION

A COMPLETE RANGE FOR ALL REQUIREMENTS

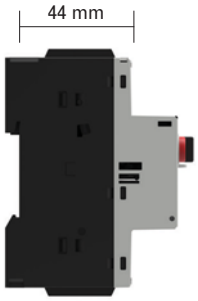

SM1P... MODULAR SIZES

Device profile of all sizes allows fitting in modular panels and distribution boards giving easy access to the buttons.
Auxiliary contacts, indicator contacts and trip releases are also of compatible dimensions for use in modular panels.



40A IN 45MM

16 adjustment ranges from 0.1A to 40A are available in a compact device just 45mm wide.

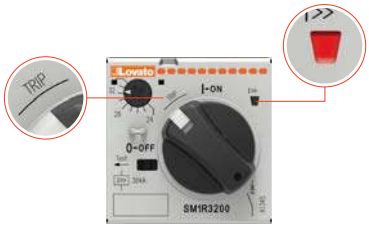

SM1R... TRIP INDICATION

Visible "trip" position of operator gives clear indication of short-circuit overload.
Red flag for magnetic trip only.



SM1RM... MAGNETIC ONLY VERSIONS

Magnetic-only versions are intended to protect starters which already feature overload protection.



SM1PF... VERSIONS FOR FUSE CONTROL

Devices that "open" in the event of tripping of one of the fuses connected to every phase.



UL TYPE E (self-protected combination motor controller)

Type E is a specific requirement of the UL standards for increased isolation distances and strict breaking capacity tests on short-circuit protection devices.
It permits the elimination of further short-circuit protection devices before the motor protection breaker.



AUXILIARY CONTACTS

Auxiliary contacts are also available with trip indication (ability to distinguish between overload and short-circuit tripping).



CONTACTOR MOTOR PROTECTION CONNECTIONS

The rigid connections between motor protection circuit breaker and contactor permit the creation of complete compact starters, quickly and using less space.

SM1... HIGH-PERFORMANCE PLASTICS

IEC/EN 60335-compliant plastics for domestic and similar applications. Can be in used in equipment for catering.
EN 45545-compliant plastics for railway applications, fire protection.



SM1Z... ENCLOSURES

Various types of enclosures are available for the button and rotary motor protection breakers up to 40A. Ideal for small machines and isolated motors. Protection rating IP65 and UL Type 4X and UV-ray resistant. Very strong plastics; IK07; even passes the severe UL "ball impact" test. UL-certified.



DOOR COUPLING HANDLES

Padlockable door coupling handles for the entire range with rotary control. Robust, easy and quick to install.
They allow the motor protection breaker to perform an additional door coupling disconnector function as well.
Protection rating IP65 and UL Type 4X.



PADLOCK COMPATIBILITY

The entire range of rotary and button control motor protection circuit breakers is padlockable as standard. For greater safety of operators during maintenance.

Lovato electric
ENERGY AND AUTOMATION

SM1P... up to 40A

> Push button control
> Up to 40A with width of just 45mm
> Suitable for modular panels
> UL508 certified (manual motor controller)
> Padlockable in OFF position
> EN 45545 compliant plastic materials (railway applications)
> IEC/EN 60335 compliant plastic materials (domestic applications).



PUSH BUTTON CONTROL

Operational characteristics

- IEC rated insulation voltage Ui 690V
- IEC rated impulse withstand voltage Uimp: 6kV
- IEC rated frequency 50/60Hz
- maximum rated current: 40A
- adjustment ranges: 16
- IEC breaking capacity Icu at 400V:
  - 100kA up to 10A
  - 25kA from 9 to 18A
  - 15kA from 17 to 25A
  - 10kA from 24 to 40A
- heat dissipation per phase: 0.7...3.3W
- magnetic tripping: 13In max.
- tripping class: 10A
- phase failure sensitive
- mechanical life: 100,000 cycles
- electrical life: 100,000 cycles
- mounting on 35mm DIN rail (IEC/EN 60715)
- mounting position: any
- IEC utilisation category: A
- padlockable in OFF: Ø4mm
- IEC degree of protection: IP20.

Certifications and compliance

Certifications obtained: cULus.
Compliant with standards: IEC/EN 60947-1, IEC/EN 60947-2, IEC/EN 60947-4-1, UL508, CSA C22.2 n° 14.
Plastic materials compliant with standards: EN 45545 and IEC/EN 60335.

SM1Z...P ENCLOSURES FOR **PUSH BUTTON CONTROL**

> SURFACE MOUNT VERSIONS WITH WIDTH OF 80mm OR 100mm WITH AND WITHOUT EMERGENCY STOP CONTROL
> FLUSH-MOUNT VERSION WITH WIDTH OF 87mm

- IEC degree of protection IP65 – UL Type 4X
- impact protection IK07
- UL certified
- very strong plastic material
- UV-ray resistant
- operating temperature -25...+60°C
- M25 threaded cable entry for 80mm versions
- breakable membranes for cable glands M20/M25 for 100mm versions.





Accessories for enclosures

Rubber membrane:
- IP65 (4X).

Emergency stop button:
- latching, twist to release
- Ø30mm red button.

Padlockable lock:
- prevents closing motion
- max. 3 Ø4...8mm padlocks.

SM1R... up to 40A

> Rotary control
> Up to 40A with width of just 45mm
> High breaking capacity
> UL508 certified (manual motor controller)
> UL Type E certified (self-protected combination motor controller)
> Trip indication position
> Magnetic trip indicator
> Padlockable in OFF position
> EN 45545 compliant plastic materials (railway applications)
> IEC/EN 60335 compliant plastic materials (domestic applications)
> Control with door coupling handle.



ROTARY KNOB TYPE

Operational characteristics

- IEC rated insulation voltage Ui 690V
- IEC rated impulse withstand voltage Uimp: 6kV
- IEC rated frequency 50/60Hz
- maximum rated current: 40A
- adjustment ranges: 16
- IEC breaking capacity Icu at 400V:
  - 100kA up to 18A
  - 50kA from 17 to 32A
  - 20kA from 30 to 40A
- heat dissipation per phase: 0.7...3.3W
- magnetic tripping: 13In max.
- tripping class: 10A
- phase failure sensitivity
- mechanical life: 100,000 cycles
- electrical life: 100,000 cycles
- mounting on 35mm DIN rail (IEC/EN 60715)
- mounting position: any
- IEC utilisation category: A
- padlockable in OFF: Ø4mm
- IEC degree of protection: IP20.

Certifications and compliance

Certifications obtained: cULus.
SM1R... breakers (only with accessory SM1X90 00R) are Type E certified (self-protected combination motor controller) according to UL508 (certification available for settings from 0.1 to 6.5A; remaining settings being certified).
Compliant with standards: IEC/EN 60947-1, IEC/EN 60947-2, IEC/EN 60947-4-1, UL508, CSA C22.2 n° 14.
Plastic materials compliant with standards: EN 45545 and IEC/EN 60335.

SM1Z...R ENCLOSURES FOR **ROTARY KNOB TYPE**

> SURFACE MOUNT VERSION WITH WIDTH OF 100mm WITH YELLOW/RED OR GREY/BLACK HANDLE



- IEC degree of protection IP65 – UL Type 4X
- impact protection IK07
- UL certified
- very strong plastic material
- UV-ray resistant
- operating temperature -25…+60°C
- breakable membranes for M20/M25 cable glands
- lockable with max. 3 Ø4...8mm padlocks.

SM2R... - SM3R from 34 to 100A

> Rotary control
> From 34 to 100A
> High breaking capacity
> UL508 certified (manual motor controller)
> UL TYPE E certified (self-protected combination motor controller)
> Double lug terminals
> Padlockable in OFF
> Control with door coupling handle.



ROTARY KNOB TYPE



Operational characteristics

- IEC rated insulation voltage Ui 1000V
- IEC rated impulse withstand voltage Uimp: 8kV
- IEC rated frequency 50/60Hz
- maximum rated current:
  63A (for SM2...); 100A (for SM3...)
- adjustment ranges: 2 (for SM2...); 3 (for SM3...)
- IEC breaking capacity Icu of 50kA at 400V
- max. heat dissipation per phase: 7W
- magnetic tripping: 13In max.
- tripping class: 10A
- phase failure sensitivity
- mechanical life: 50,000 cycles
- electrical life: 25,000 cycles
- mounting on 35mm DIN rail (IEC/EN 60715)
- mounting position: any
- IEC utilisation category: A
- padlockable in OFF: Ø4mm
- IEC degree of protection: IP20 front.

Certifications and compliance

Certifications obtained: cULus.
SM2... and SM3... breakers
(the latter with accessory SM3X90 00R) are
Type E certified (self-protected combination motor
controller) according to UL508.
Compliant with standards: IEC/EN 60947-1, IEC/EN 60947-2,
IEC/EN 60947-4-1, UL508, CSA C22.2 n° 14

ACCESSORIES



ADD-ON AUXILIARY CONTACTS



SHUNT TRIP RELEASES



UNDERVOLTAGE TRIP RELEASES

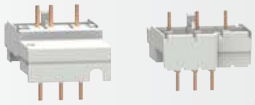

RIGID CONNECTIONS
SM1...



PADLOCKABLE DOOR COUPLING HANDLES
SM1R..., SM2R..., SM3R...

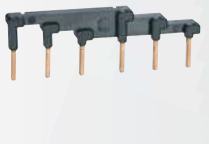

THREE-PHASE CONNECTION BUSBARS
SM1...

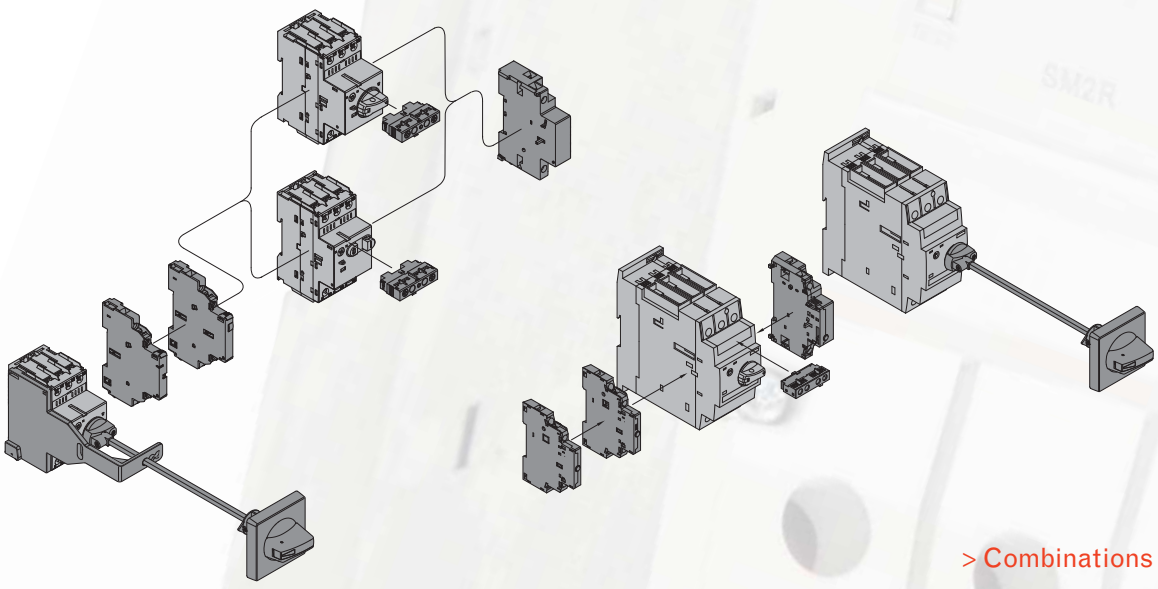

> Combinations

The products described in this document are subject to updates or modifications at any time. The descriptions, technical and functional information, illustrations and instructions in the leaflet are to be considered as purely illustrative, and consequently have no contractual relevance. Remember also that the products themselves must be used by qualified personnel, in compliance with current plant–engineering installation regulations, in order to avoid damage to persons or property.

Lovato electric

ENERGY AND AUTOMATION

www.LovatoElectric.com

LOVATO ELECTRIC S.P.A.

via Don E. Mazza, 12
24020 Gorle (Bergamo), Italy

tel. +39 035 4282111
fax + 39 035 4282200
info@LovatoElectric.com

Follow us

PD115 GB 06 16