TELEDYNE TEST TOOLS
Everywhereyoulook™

T3LCR1002, T3LCR1100, T3LCR1300

Precision LCR Meters

User Manual



This manual contains proprietary information, which is protected by copyright. All rights are reserved. No part of this manual may be photocopied, reproduced or translated to another language without prior written consent of the Teledyne LeCroy company.

The information in this manual was correct at the time of printing. However, Teledyne LeCroy continues to improve products and reserves the right to change specifications, equipment, and maintenance procedures at any time without notice.

Safety Summary

⚠Warning ⚠ Dangerous

When you notice any of the unusual conditions listed below, immediately terminate operation and disconnect the power cable.

Please contact the TELEDYNE service center representative for repair of the instrument. If you continue to operate without repairing the instrument, there is a potential fire or shock hazard for operators.

The instrument is operating abnormally if:

- The instrument emits abnormal noise, smell, smoke, or a spark-like light during the operation.
- The instrument generates high temperature or electrical shock during operation.
- The power cable, plug, or receptacle on the instrument is damaged.
- Foreign substances or liquid has fallen into the instrument.

The following general safety precautions must be observed during all phases of operation, service, and repair of this instrument. Failure to comply with these precautions or with specific WARNINGS elsewhere in this manual may impair the protection provided by the equipment. In addition it violates safety standards of design, manufacture, and intended use of the instrument.

Disclaimer	TELEDYNE assumes no liability for the customer's failure to comply with these requirements.
Ground The Instrument	To avoid electric shock hazards, the instrument chassis and cabinet must be connected to a safety earth ground by the supplied power cable with earth blade.
DO NOT Operate In An Explosive Atmosphere	Do not operate the instrument in the presence of inflammable gasses or fumes. Operation of any electrical instrument in such an environment constitutes a definite safety hazard.

Keep Away From Live Circuits	Operating personnel must not remove instrument covers. Component replacement and internal adjustments must be made by qualified maintenance personnel. Do not replace components with the power cable connected. Under certain conditions, dangerous voltages may exist even with the power cable is removed. To avoid injuries, always disconnect the power and discharge the circuits before touching them.
DO NOT Service Or Adjust Alone	Do not attempt internal service or adjustment unless another person, capable of rendering first aid and resuscitation, is present.
DO NOT Substitute Parts Or Modify Instrument	Because of the danger of introducing additional hazards, do not install substitute parts or perform unauthorized modifications to the instrument. Return the instrument to a TELEDYNE authorized service center for service and repair to ensure that safety features are maintained.

Table of Contents

1. UNPACKING AND PREPERATION 10
1.1 Incoming Inspection 10
1.2 Environmental Requirements 11
1.3 Cleaning 11
1.4 How to Remove the Handle 12
2. OVERVIEW 13
2.1 Introduction 13
2.2 Main Specifications and Features 14
2.2.1 Test Function 14
2.2.2 Equivalent Circuit 14
2.2.3 Ranging 14
2.2.4 Measurement Speed 14
2.2.5 Trigger Mode 15
2.2.6 Basic Accuracy 15
2.2.7 Display Range 15
2.3 Test Signal 15
2.3.1 Test Signal Frequency 15
2.3.2 Test Signal Level 16
2.3.3 Output impedance 16
2.4 Main Functions 16
2.4.1 Correction Function 16
2.4.2 Comparator Function (Sorting) 16
2.4.3 List Sweep 17
2.5 Measurement Assistance Functions 17
2.5.1 Files 17
2.5.2 Key Lock 17
2.5.3 RS-232/USB 17
2.6 Options 17
2.6.1 USB host port 17
2.6.2 DC Bias Voltage 19

3. STARTUP.....20
3.1 Front panel 20
3.2 Rear Panel 21
3.3 Power On/Off 21
3.3.1 Power On 21
3.3.2 Power Off 21
3.4 Warm-up Time 22
3.5 Connect to the Device Under Test (DUT) 22
4. MEASURE KEY.....23
4.1 [MEAS DISPLAY] Page 23
4.1.1 Measurement Function [FUNC] 24
4.1.2 Impedance Range [RANGE] 26
4.1.3 Test Frequency [FREQ] 28
4.1.4 Trigger Mode [TRIG] 29
4.1.5 Test Signal Voltage/Current Level [LEVEL] 30
4.1.6 Measurement Speed [SPEED] 31
4.1.7 Measurement log [LOG] 32
4.2 [OPEN/SHORT] Page 34
4.2.1 Open Correction [OPEN] 35
4.2.2 Short Correction [SHORT] 36
4.2.3 SPOT Correction 37
4.3 [LIST SETUP] Page 39
4.3.1 Measurement Function [FUNC] 40
4.3.2 Test Mode [MODE] 40
4.3.3 List Measurement Parameters 41
4.3.4 List Point and Limit Modes 42
4.4 [LIST MEAS] Page 43
4.4.1 Trigger Mode [TRIG] 43
4.4.2 Test Mode [MODE] 44
4.4.3 Range Mode [RANGE] 45
4.4.4 Measurement log [LOG] 45
4.5 [ENLARGE DISPLAY] Page 47

4.5.1 Enlarge Display 47
4.5.2 Direct Comparison Function 48
5. SETUP KEY 49
5.1 [MEAS SETUP] Page 49
5.1.1 Source Output Impedance [SRC RES] 50
5.1.2 Averaging Factor [AVG] 51
5.1.3 DC Bias Voltage [BIAS] 51
5.1.4 Auto LCZ Function [AUTO LCZ] 52
5.1.5 Monitor 1 and Monitor 2 [MON 1][MON 2] 52
5.1.6 Measurement Delay [DELAY] 53
5.1.7 AUTO LEVEL CONTROL [ALC] 53
5.1.8 Nominal Value [NOMINAL] 54
5.2 [BIN SETUP] Page 55
5.2.1 Measurement Function [FUNC] 56
5.2.2 Comparator Function ON/OFF 56
5.2.3 Auxiliary Bin [AUX] 58
5.2.4 Primary Parameter Comparator limit mode [MODE] 58
5.2.5 Nominal value for tolerance mode 61
5.2.6 Beep feature 61
5.2.7 Total Number of Bins [#-BINS] 61
5.2.8 Lower and Upper Limits 62
5.3 [BIN MEAS] Page 62
5.3.1 Comparator Function ON/OFF 63
5.3.2 Auxiliary Bin [AUX] 64
5.4 [BIN COUNT] Page 64
5.4.1 Counter Function [COUNT] 65
6. SYSTEM CONFIGURATIONS 66
6.1 [SYSTEM CONFIG] Page 66
6.1.1 Setting the system date and time 67
6.1.2 Account Setting 68
6.1.3 KEY BEEP Setting 69
6.1.4 Baud rate 69

6.1.5 Remote control interface 70
6.1.6 TERMINATOR 70
6.1.7 Hand Shake 71
6.1.8 Error Code 71
6.1.9 Result 73
6.1.10 DATA BUFFER 73
6.1.11 DEFAULT SET 74
6.2 [SYSTEM INFO] Page 75
7. FILE OPERATION 76
7.1 [FILE] Page 76
7.1.1 [MEDIA] 77
7.1.2 Recall a File at Startup [AUTO RECALL] 77
7.1.3 Auto save data to last file [AUTO SAVE] 78
7.1.4 File operation 78
8. HANDLER INTERFACE 79
8.1 Pin Assignment 80
8.2 Connection 82
8.3 Timing Chart for Handler Interface 83
9. EXAMPLES 84
9.1 Basic Measurement Procedure 84
9.2 Example 85
10 REMOTE CONTROL 89
10.1 RS-232 Interface 89
10.2 USB Interface 90
10.3 Install USB Driver 92
11. COMMAND REFERENCE 95
11.1 Terminator 95
11.2 Notation Conventions and Definitions 95
11.3 Command Structure 95
11.4 Header and Parameters 98
11.5 Command Reference 99
11.6 DISPlay Subsystem 100

11.6.1 DISP:LINE 100
11.6.2 DISP:PAGE 100
11.7 FUNCtion Subsystem 102
11.7.1 FUNCtion 102
11.7.2 FUNCtion:IMPedance:AUTO 103
11.7.3 FUNCtion:IMPedance:RANGe 103
11.7.4 FUNCtion:DCR:RANGe 103
11.7.5 FUNCtion:RANGe:AUTO 104
11.7.6 FUNCtion:MONitor 1 /2 104
11.8 LEVel Subsystem 106
11.8.1 LEVel:VOLTage (=VOLTage[:LEVel]) 106
11.8.2 LEVel:CURRent (=CURRent[:LEVel]) 107
11.8.3 LEVel:SRESistance (= VOLTage:SRESistance) 107
11.8.4 LEVel:ALC (=AMPlitude:ALC) 108
11.8.5 LEVel:MODe? 108
11.9 APERture Subsystem 109
11.9.1 APERture:RATE? 109
11.9.2 APERture:AVG? 109
11.10 FETCh Subsystem 110
11.10.1 FETCh? 110
11.10.2 FETCh:IMPedance? 111
11.10.3 FETCh:MAIN? 111
11.10.4 FETCh:MONitor1? /2? 111
11.10.5 FETCh:MONitor? 111
11.10.6 FETCh:LIST? 112
11.11 COMParator Subsystem 113
11.11.1 COMParator:STATe 113
11.11.2 COMParator:MODE 114
11.11.3 COMParator:AUX 114
11.11.4 COMParator:BINS 114
11.11.5 COMParator:TOLerance:NOMinal 115
11.11.6 COMParator:TOLerance:BIN 115

11.11.7 COMParator:SLIM 115
11.11.8 COMParator:BEEP 116
11.11.9 COMParator:OPEN 116
11.12 LIST Subsystem 117
11.12.1 LIST:PARAmeter 117
11.12.2 LIST:STAT 117
11.12.3 LIST:BAND 118
11.13 CORRection Subsystem 119
11.13.1 CORRection:OPEN 119
11.13.2 CORRection:OPEN:STATe 120
11.13.3 CORRection:OPEN:LCR 120
11.13.4 CORRection:OPEN:DCR 120
11.13.5 CORRection:SHORt 120
11.13.6 CORRection:SHORt:STATe 121
11.13.7 CORRection:SHORt:LCR 121
11.13.8 CORRection:SHORt:DCR 121
11.13.9 CORRection:SPOT:STATe 121
11.13.10 CORRection:SPOT:FREQuency 122
11.13.11 CORRection:SPOT:OPEN 122
11.13.12 CORRection:SPOT:SHORt 122
11.14 TRIGger Subsystem 123
11.14.1 TRIGger[:IMMediate] 123
11.14.2 TRIGger:SOURce 123
11.14.3 TRIGger:DELAY 123
11.15 BIAS Subsystem 124
11.16 FILE Subsystem 125
11.16.1 FILE? 125
11.16.2 FILE:SAVE 125
11.16.3 FILE:LOAD 125
11.16.4 FILE:DELete 126
11.17 ERRor Subsystem 126
11.17.1 ERRor? 126

11.18 SYSTEM Subsystem 126
11.18.1 SYSTem:SHAKehand 126
11.18.2 SYSTem:CODE 126
11.18.3 SYSTem:KEYLock 127
11.18.4 SYSTem:RESult 127
11.19 Common Commands 127
11.19.1 *IDN? 127
11.19.2 *TRG 127
11.19.3 *SAV 128
11.19.4 *RCL 128
12. SPECIFICATION 129
12.1 General Specification 129
12.2 Dimensions 133
13. ACCURACY 134
13.1 Accuracy 135
13.1.1 L, C, R |Z| Measurement Accuracy 135
13.1.2 Accuracy for D 135
13.1.3 Accuracy for Q 136
13.1.4 Accuracy for θ 136
13.1.5 Accuracy for Rp 136
13.1.6 Accuracy for Rs 137
13.2 Correction factors that affect measurement accuracy 137
Certifications 141
EMC Compliance 141
Safety Compliance 143
Environmental Compliance 143
RESTRICTION OF HAZARDOUS SUBSTANCES (RoHS) 144

1. UNPACKING AND PREPERATION

This chapter describes how to set up and start the T3LCR Series LCR Meter.

- Incoming Inspection
- Environmental Requirements
- Cleaning
- How to Remove the Handle

1.1 Incoming Inspection

After you receive the instrument, perform the following checks during unpacking according to the following procedure:



WARNING

If the external face of the instrument (such as the cover, front/rear panel, VFD screen, power switch, and port connectors) appears to have been damaged during transport, do not turn on the power switch. Otherwise, you may get an electrical shock.

Make sure that the packing box or shock-absorbing material used to package the instrument has not been damaged.

Check that all packaged items supplied with the meter have been provided as specified:
LCR
Test Lead
Power Cord
D-sub

Note

If an abnormality is detected, contact the company and transport the meter to your nearest TELEDYNE sales or service office. Save the packing box, shock-absorbing material, and packaged items as you received them in case you need to mail the instrument to an authorized TELEDYNE distributor or service center.

1.2 Environmental Requirements

Set up the T3LCR Series where the following environmental requirements are satisfied.

Operating Environment

Ensure that the operating environment meets the following requirements:

Temperature:	0ºC to 50ºC
Temperature range at calibration:	23ºC±5ºC (<1ºC deviation from the temperature when performing calibration)
Humidity:	<70% at wet bulb temperature ≤40ºC (non-condensation)
Altitude:	0 to 2000m

1.3 Cleaning

To prevent electrical shock, disconnect the T3LCR Series power cable from the receptacle before cleaning. Use a dry cloth or a cloth slightly dipped in water to clean the casing. Do not attempt to clean the T3LCR Series internally.



WARNING

Don't Use Organic Solvents (such as alcohol or gasoline) to clean the Instrument.

1.4 How to Remove the Handle

A handle kit is attached to the T3LCR Series:

Figure 1-1 How to remove the handle



1 Retracted



2 Extended

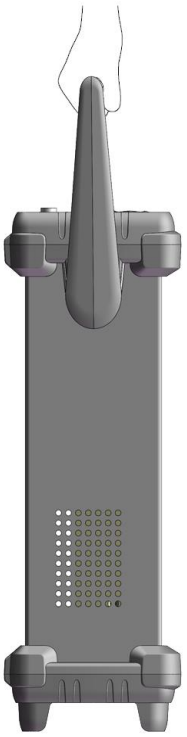

3 Carrying Position

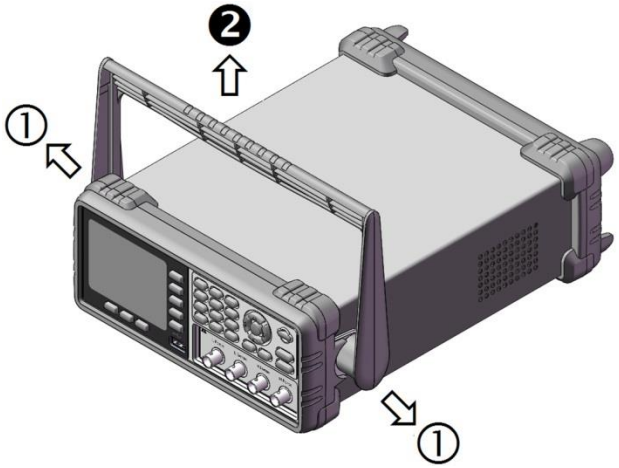

Remove Handle

(Lift the handle perpendicular to the unit while pulling it in the direction of 1.)

2. OVERVIEW

This chapter contains general information about T3LCR Series .The information is organized as follows.

- Introduction
- Main Specifications
- Feature overview

2.1 Introduction

Thank you for purchasing an T3LCR Series LCR meter.

The TELEDYNE T3LCR Series is a general-purpose LCR meter for incoming inspection of components, quality control, and laboratory use.

The T3LCR Series is used for evaluating LCR components, materials, and semiconductor devices over a wide range of frequencies (10 Hz to 300 kHz) and test signal levels (10.00mV to 2.00V & 100.0uA to 20.00mA).

With its built-in comparator, the T3LCR Series can output comparison/decision results for sorting components into a maximum of ten bins. Furthermore, by using the handler interface, the T3LCR Series can be easily combined with a component handler, and a system controller to fully automate component testing, sorting, and quality-control data processing.

The list measure function permits entry of up to 10 frequencies or test signal levels points to be automatically measured.

2.2 Main Specifications and Features

2.2.1 Test Function

Cs-Rs, Cs-D, Cp-Rp, Cp-D, Lp-Rp, Lp-Q, Ls-Rs, Ls-Q, Rs-Q, Rp-Q, R-X, DCR, Z-θr, Z-θd, Z-D, Z-Q

2.2.2 Equivalent Circuit

Serial and Parallel

Table 2-1 Equivalent Circuit

Circuit		Dissipation Factor	Conversion
L	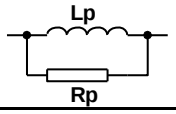	D=2π FLp/Rp=1/Q	Ls=Lp/(1+D^2) Rs=RpD^2/(1+D^2)
	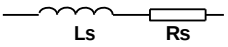	D=Rs/2π FLs=1/Q	Lp=(1+D^2)Ls Rp=(1+D^2)Rs/D^2
C	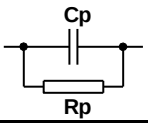	D=1/2π FCpRp=1/Q	Cs=(1+D^2)Cp Rs=RpD^2/(1+D^2)
	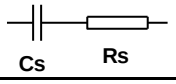	D=2π FCsRs=1/Q	Cp=Cs/(1+D^2) Rp=Rs(1+D^2)/D^2

Q=Xs/Rs, D=Rs/Xs, Xs=1/2πFCs=2πFLs

2.2.3 Ranging

Auto, Hold and Nominal range. Total 9 Ranges.

About Nominal ranges: The T3LCR Series will automatically select the best range according to the nominal value.

2.2.4 Measurement Speed

Fast: 40 readings per second; 25ms/per reading[*1]

Medium: 10 readings per second; 100ms/per reading[*1]

Slow: 3 readings per second; 333ms/per reading[*1]

You can also specify the averaging factor within the range of 1 to 256 in steps of 1 to improve performance.

NOTE *1. Measurement speed in 300kHz, typical.

2.2.5 Trigger Mode

Includes Internal, Manual, External and Bus Trigger.

2.2.6 Basic Accuracy

0.05%@SLOW/MED

0.1%@FAST

2.2.7 Display Range

Table 2-2 Display Range

Parameter	Display Range
L	0.00001uH-9999.99H
C	0.00001pF-9999.99mF
R, X, |Z|	0.00001Ω-99.9999MΩ
G, B, |Y|	0.01nS-999.999S
D	0.00001-9.99999
Q	0.00001-99999.9
θd	-179.999°-179.999°
θr	-3.14159-3.14159
DCR	0.00001Ω-99.9999MΩ
Δ%	-999999%-999999%

2.3 Test Signal

2.3.1 Test Signal Frequency

T3LCR1300: 10Hz-300kHz

T3LCR1100: 10Hz-100kHz

T3LCR1002: 10Hz-2kHz

Frequency Accuracy: ±0.01%

2.3.2 Test Signal Level

AC: 10.00mV-2.00V (±10%)
CV mode:10.00mV-2.00V(±6%)

100.0uA-20.00mA (±10%)
CC mode:100.0uA-20.00mA(±6%) @2VMax

DCR: +2V, 0.066A(Max.), Output impedance fixed 30Ω

2.3.3 Output impedance

30Ω, 50Ω and 100Ω

2.4 Main Functions

2.4.1 Correction Function

OPEN/SHORT correction:

Eliminates measurement errors due to stray parasitic impedance in the test fixtures.

2.4.2 Comparator Function (Sorting)

Bin sort

The primary parameter can be sorted into BIN1-BIN9, AUX, OUT and HI/IN/LO for each of the primary measurement parameters.

The sequential mode or tolerance mode can be selected as the sorting mode.

Limit Setup

Absolute value, deviation value, and % deviation value can be used for setup.

BIN count

Countable from 0 to 999999

2.4.3 List Sweep

Points

There is a maximum of 10 points.

Sweep parameters

Test frequency, test voltage, test current.

Comparator function of list sweep

The comparator function enables you to set one pair of lower and upper limits for each measurement point.

You can select from:
Judge with the first sweep parameter/Judge with the second parameter/Not used for each pair of limits.

2.5 Measurement Assistance Functions

2.5.1 Files

Up to 10 setup conditions can be written to/read from the built-in non-volatile memory.

2.5.2 Key Lock

The front panel keys can be locked.

2.5.3 RS-232/USB

Complies with SCPI.

2.6 Options

2.6.1 USB host port

Universal serial bus jack, type-A (4 contact positions, contact 1 is on your left); female; for connection to USB memory devices only.

USB disk type: Flash disk only.

Format: FAT / FAT32 / exFAT.

Max memory size: 128GB.

Save Screen

After a USB disk has been inserted into the USB host port of the LCR meter and if the meter detects that the USB disk is usable, the meter will show "USB Disk Ready. Press <Enter> to save screen." on the lower part of the LCD screen.

Figure 2-1 Disk Ready

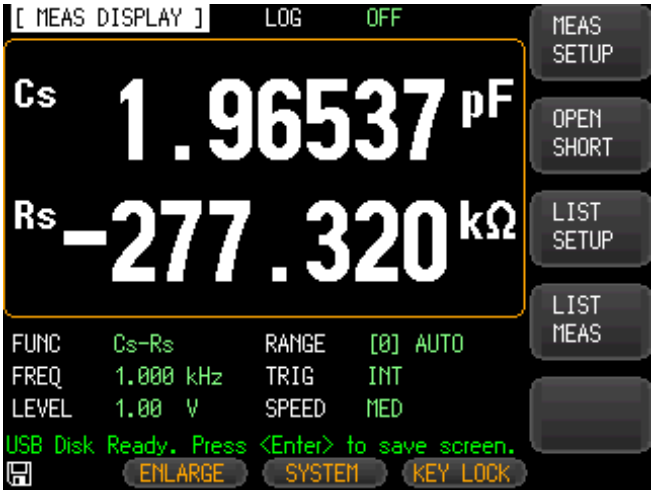

If the keypad is not needed to enter a numeric value, a screenshot of the meter's LCD display can be captured and saved to the USB disk by depressing the Enter key. If the screen shot is saved successfully, "Screen saved." will be shown in the message area at the bottom of the screen. The location and name of the screenshot will also be shown, for example: F:\T3LCR1300\Screen\ScreenShot001.bmp.

Figure 2-2 Screen Saved

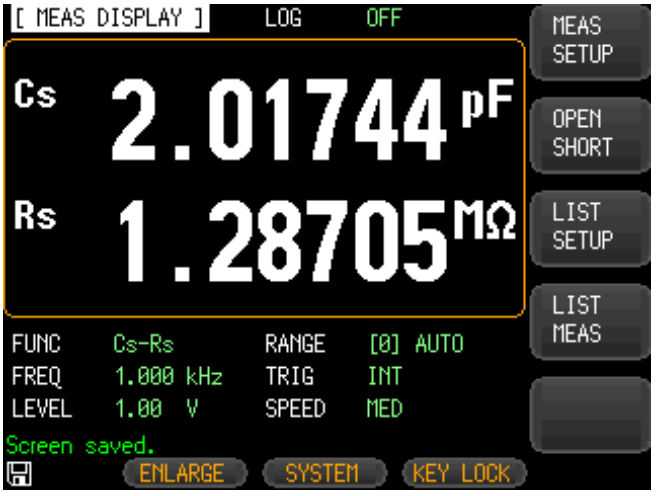

2.6.2 DC Bias Voltage

0V-±2.5V

Accuracy: ±0.5%+0.005V

3. STARTUP

This chapter describes names and functions of the front panel, rear panel, and screen display and provides the basic procedures for operating the T3LCR Series.

- Front panel summary
- Rear panel summary
- Power On/Off
- Connect to Device under test

3.1 Front panel

Figure 3-1 Front panel

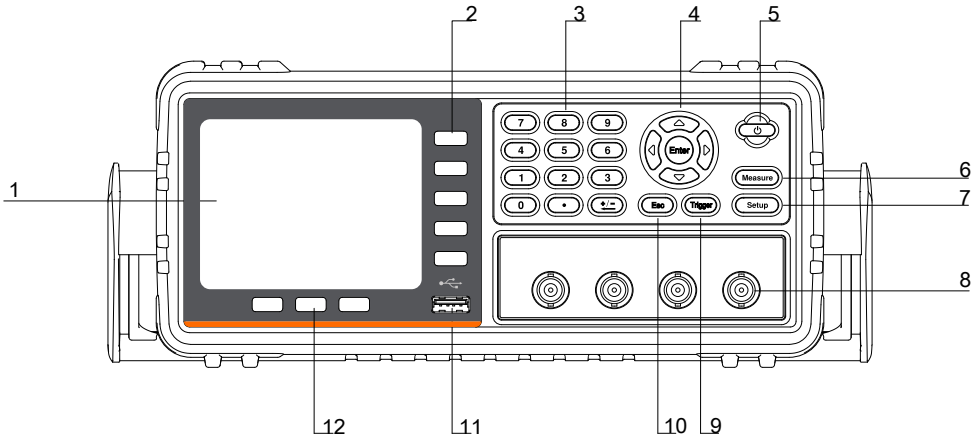

Table 3-1 Front panel description

No.	Description
1	LCD Display
2	Soft-key
3	Number Key
4	Cursor Key
5	Power Switch
6	Measure key
7	Setup Key
8	BNC Terminal

9	Trigger Key
10	ESC Key
11	USB Disk Port (USB-Host)
12	System Soft-key

3.2 Rear Panel

Figure 3-2 Rear Panel

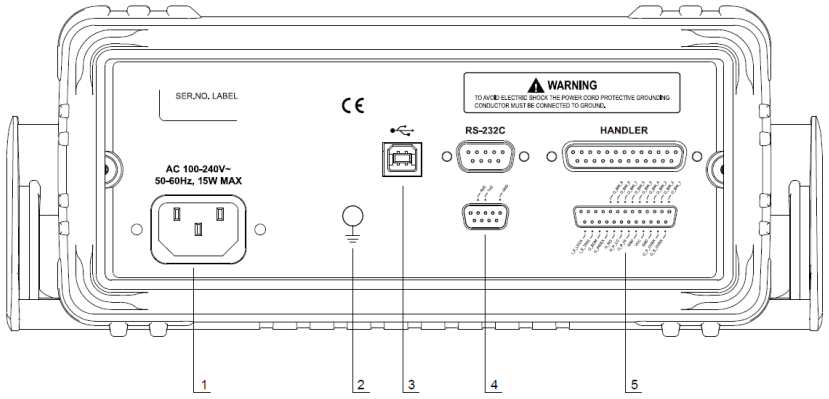

Table 3-2 Rear panel description

No.	Description
1	Power Cable Receptacle(Outlet)
2	Frame Terminal
3	USB Interface(Type B)
4	RS-232 Interface
5	Handler Interface

3.3 Power On/Off

3.3.1 Power On

Press the power key for at least 1 second. Release power key when the POWER LED turns green.

3.3.2 Power Off

Press the power key at least 1 second. T3LCR Series will shut down when you release the power key after the POWERLED turns red.

If the AUTOSAVE option of the File Operation menu is set to ON (see page 76), the POWER LED will flash twice and the AUTOSAVE function will be executed during the power-off sequence.

3.4 Warm-up Time

T3LCR Series is ready to be used as soon as the power-up sequence has completed. However, to achieve the specification accuracy, first warm up the instrument for 30 minutes.

3.5 Connect to the Device Under Test (DUT)

The T3LCR Series uses a four terminal measurement configuration that provides easy, accurate and stable measurements and avoids mutual inductance, interference from measurement signals, noise and other factors inherent with other types of connections.

Figure 3-3 Connect to DUT

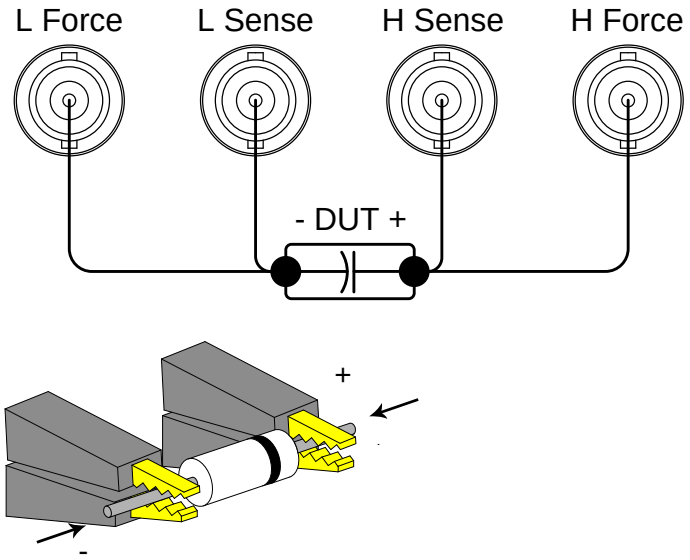

WARNING

Do not apply DC voltage or current to the UNKNOWN terminals. Applying a DC voltage or current may lead to device failure. Connect the measurement sample (DUT) to the test port (or the test fixture, cables, etc. after the DUT has been completely discharged.

4. MEASURE KEY

This section includes the following information:

- MEAS DISPLAY page
- OPEN/SHORT page
- LIST SETUP page
- LIST MEAS page

4.1 [MEAS DISPLAY] Page

When the [Measure] key is pressed, the [MEAS DISPLAY] page appears. The following measurement controls can be set.

- FUNC – Measurement Function
- RANGE – Impedance range
- FREQ – Test Frequency
- TRIG – Trigger Mode
- LEVEL – Test Signal Level
- SPEED –Measurement Speed

Figure 4-1 [MEAS DISPLAY] Page

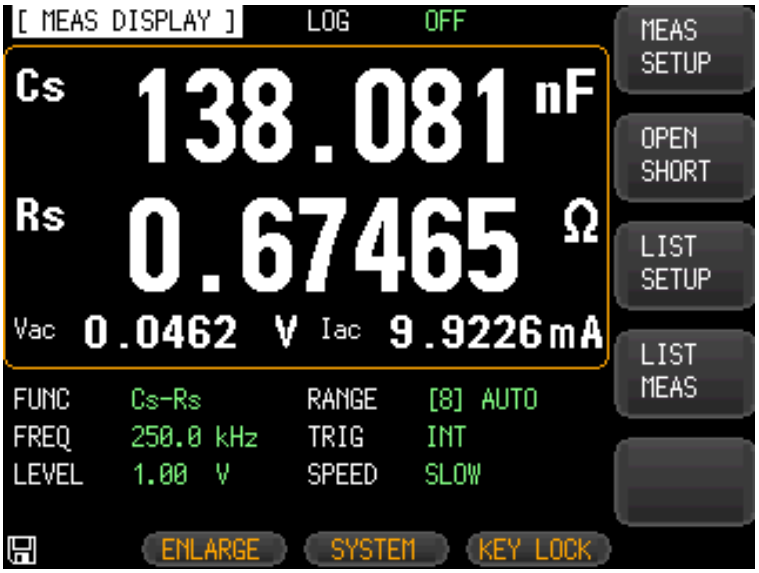

4.1.1 Measurement Function [FUNC]

The T3LCR Series simultaneously measures four components of complex impedance (parameters) in a measurement cycle. These include a primary parameter, a secondary parameter and two monitor parameters.

NOTE The monitor parameters can be set in the [SETUP] page. The monitor parameters are initially set to OFF.

Types of measurement parameters

Table 4-1 Measurement parameter combinations

Cs-Rs	Cs-D	Cp-Rp	Cp-D
Lp-Rp	Lp-Q	Ls-Rs	Ls-Q
Rs-Q	Rp-Q	R-X	DCR
Z-θr	Z-θd	Z-D	Z-Q

Monitor parameters

Table 4-2 Monitor parameters

Z	D	Q	
Vac	Iac	Δ	Δ%
θr	θd	R	X
G	B	Y	

Table 4-3 Measurement and Monitor parameter descriptions

Parameter	Description
Cs	Capacitance value measured using the series equivalent circuit model
Cp	Capacitance value measured using the parallel equivalent circuit model
Ls	Inductance value measured using the series equivalent circuit model
Lp	Inductance value measured using the parallel equivalent circuit model
Rs	Equivalent series resistance measured using the series equivalent circuit model (ESR)
Rp	Equivalent parallel resistance measured using the parallel equivalent circuit model
Z	Absolute value of impedance
Y	Absolute value of admittance
G	Conductance
B	Susceptance
R	Resistance (=Rs)
X	Reactance
D	Dissipation factor
Q	Quality factor(=1/D)
θr	Phase radian
θd	Phase angle
Vac	Test signal Voltage
Iac	Test signal Current
Δ	Absolute deviation value
Δ%	Relative deviation value
DCR	Direct Current Resistance

Procedure for setting the measurement function [FUNC]

Step 1. Press the [Measure] key.

Step 2. Press the [MEAS DISPLAY] soft-key if [MEAS DISPLAY] is not already the active mode.

Step 3. Use the cursor key to select [FUNC] field.

Step 4. Use the soft-keys to select measurement function.

4.1.2 Impedance Range [RANGE]

Impedance range mode

To achieve the best measurement result, it is recommended to set the impedance range mode to "Auto range". When using "Hold range", errors in measurement results may occur if the measured value exceeds the full scale of the selected range.

Table 4-4 Impedance range mode

Mode	Function overview	Advantage	Disadvantage
Auto Range	T3LCR Series sets the optimum impedance range for the impedance of the DUT	You don't need to select range	The measurement time is longer due to the ranging time
Hold Range	Measurement	No ranging time is required	You need to select a proper range depending on the value of the DUT.
Nominal Range	T3LCR Series sets the optimum range depending on the nominal value	You don't need to select range. No ranging time is required	Valid only in the sorting mode

Available impedance range

The hold range has nine impedance ranges: 10, 30, 100, 300, 1k, 3k, 10k, 30k and 100k.

The impedance range is selected according to the DUT's impedance even if the measurement parameter is capacitance or inductance.

Table 4-5 Effective measurement range for the impedance range when in HOLD state.

Range	Impedance	Effective measurement range
8	10Ω	0-10Ω
7	30Ω	10Ω-100Ω
6	100Ω	100Ω-316Ω
5	300Ω	316Ω-1kΩ
4	1kΩ	1kΩ-3.16kΩ
3	3kΩ	3.16kΩ-10kΩ
2	10kΩ	10kΩ-31.6kΩ
1	30kΩ	31.6kΩ-100kΩ (∞)
0	100kΩ	100kΩ-∞ (This range is available only when the test frequency< 20kHz.)

Table 4-6 DCR FUNC best measurement range for the impedance range when in HOLD state.

When the measured value exceeds 150% of the full scale for the selected range, "OVERLOAD" will be displayed.

Range No.	Impedance range	Best measurement range	Overload
7	100mΩ	0Ω-0.33Ω	0.495Ω
6	1Ω	0.32Ω-3.3Ω	4.95Ω
5	10Ω	3.2Ω-99Ω	148.5Ω
4	100Ω	90Ω-990Ω	1.485kΩ
3	1kΩ	900Ω-9.9kΩ	14.85kΩ
2	10kΩ	9kΩ-33kΩ	49.5kΩ
1	100kΩ	32kΩ-990kΩ	1.485MΩ
0	1MΩ	900kΩ-10MΩ	100MΩ

DCR accuracy: ±0.05% with 0.1Ω-312kΩ measurement range.

Procedure for setting the impedance range [RANGE]

Step 1. Press the [Measure] key.

Step 2. Use the cursor key to select the [RANGE] field.

Step 3. Use the soft-keys to select the impedance range mode or impedance range.

Soft-key	Function
AUTO RANGE	Sets to AUTO range
HOLD RANGE	Sets to HOLD range
NOMINAL RANGE	Sets to NOMINAL range
INCR +	Increments the impedance range in the HOLD mode
DECR -	Decrements the impedance range in the HOLD mode

4.1.3 Test Frequency [FREQ]

T3LCR1300: 10Hz～300kHz

T3LCR1100: 10Hz～100kHz

T3LCR1002: 10Hz～2kHz

Table 4-7 Frequency range and resolution

Frequency range(F)	Resolution
10.00Hz ≦ F ≦ 99.99Hz	0.01Hz
100.0Hz ≦ F ≦ 999.9Hz	0.1Hz
1.000kHz ≦ F ≦ 9.999kHz	1Hz
10.00kHz ≦ F ≦ 99.99kHz	10Hz
100.0kHz ≦F ≦ 300.0kHz	100Hz

Frequency Accuracy: ±0.01% with 4-digit resolution

Procedure for setting test frequency [FREQ]

Step 1. Press the [Measure] key.

Step 2. Use the cursor key to select the [FREQ] field.

Step 3. Use the soft-keys or numeric entry keys to enter the test frequency.

When data is entered with the numeric keys, the soft-keys change to unit labels (Hz, kHz).

Soft-key	Function
INCR +	Be used to select between predefined measuring frequencies.
DECR -	

Table 4-8 T3LCR1300's predefined test frequencies that can be selected by using INCR+/DECR-

INCR+/DECR-				
10Hz	50Hz	60Hz	100Hz	120Hz
1kHz	2kHz	10kHz	20kHz	40kHz
50kHz	100kHz	200kHz	250kHz	300kHz

Table 4-9 T3LCR1100's predefined test frequencies that can be selected by using INCR+/DECR-

INCR+/DECR-				
10Hz	50Hz	60Hz	100Hz	120Hz
1kHz	2kHz	10kHz	20kHz	40kHz
50kHz	100kHz			

Table 4-10 T3LCR1002's predefined test frequencies that can be selected by using INCR+/DECR-

INCR+/DECR-				
10Hz	50Hz	60Hz	100Hz	120Hz
1kHz	2kHz			

4.1.4 Trigger Mode [TRIG]

T3LCR Series supports four trigger modes: INT (internal), EXT (external), MAN (manual) and BUS (RS-232/USB).

Trigger	Description
INT	T3LCR Series continuously repeats the measurement cycle.
MAN	T3LCR Series performs one cycle of measurement each time you press the [Trig] key.
EXT	T3LCR Series performs one cycle of measurement each time a rising pulse is input to the handler external trigger input pin on the rear panel.
BUS	T3LCR Series performs one cycle of measurement each time it receives a trigger command sent via RS-232/USB.

Procedure for choosing trigger mode [TRIG]

Step 1. Press the [Measure] key.

Step 2. Use the cursor key to select the [TRIG] field.

Step 3. Use the soft-keys to select desired trigger mode.

Soft-key	Function
INT	Internal Trigger Mode
MAN	Manual Trigger Mode
EXT	External Trigger Mode
BUS	BUS Trigger Mode

4.1.5 Test Signal Voltage/Current Level [LEVEL]

The T3LCR Series' test signal voltage/current level can be set as the effective value (RMS value) of a sine wave of the test frequency from the unit's internal oscillator.

When a constant voltage or current level measurement is performed, an asterisk mark (*) appears at the end of the LEVEL display.

Test signal level setting procedure

Step 1. Press the [Measure] key

Step 2. Use the cursor key to select [LEVEL] field

Step 3. Use the soft-keys or numeric entry keys to enter the test signal voltage/current level.

Soft-key	Function
INCR +	Refer to Table 4-11
DECR -	
ALC ON	Auto Level Control ON
ALC OFF	Auto Level Control OFF

Table 4-11 Test voltage/current level that can be selected with INCR+/DECR-

INCR+/DECR-					
10.00mV	100.0mV	300.0mV	500.0mV		
1.00V	1.50V	2.00V			
INCR+/DECR-					
100.0uA	500.0uA	1.00mA	5.00mA	10.00mA	20.00mA

Voltage range	Resolution
10.00mV ≦ LEVEL ≦ 99.99mV	0.01mV
100.0mV ≦ LEVEL ≦ 999.9mV	0.1mV
1.00V ≦ LEVEL ≦ 2.00V	0.01V

Current range	Resolution
100.0uA ≦ LEVEL ≦ 999.9uA	0.1uA
1.00mA ≦ LEVEL ≦ 20.00mA	0.01mA

4.1.6 Measurement Speed [SPEED]

SLOW, MED and FAST can be selected for T3LCR Series.

SLOW mode will result in more stable and accurate measurement results.

Procedure for setting measurement speed mode

Step 1. Press the [Measure] key.

Step 2. Use the cursor key to select the [SPEED] field.

Step 3. Use the soft-keys to set measurement speed.

Soft-key	Function
FAST	40 times/sec*1
MED	10 times/sec*1
SLOW	3 times/sec*1

NOTE

*1. Measurement speed in 300kHz, typical. The Measurement Speed time is the trigger to the end of measurement (EOM) output on the Handler.

Display: [BIN MEAS] Page

[RANGE]: HOLD RANGE

[AVG]: 1

[BIAS]: OFF

[AUTO LCZ]: OFF

[MON 1] [MON 2]: OFF

[DELAY]: 0 ms

[ALC]: OFF

Measurement speed [ms]

	Speed		
Test Frequency(Hz)	SLOW	MED	FAST
10	1600	1600	1600
20	800	800	800
100	483	160	160

1k	342	94	30
2k	336	91	26.5
10k	332	88.5	24.5
100k	332	88.5	24.5
300k	332	88.5	24.5
DCR	333	171	48

4.1.7 Measurement log [LOG]

The T3LCR has an internal data buffer that record up to 10000 measurement readings. These readings can be saved to an external USB drive in a .csv file format. These readings can then be opened on a PC using software such as Windows Excel. When the LOG function is active, the display is fixed to the [MEAS DISPLAY] screen. The [FUNC], [FREQ] and [LEVEL] settings are also fixed and cannot be changed.

Procedure for setting Log

Step 1. Press the [Measure] key.

Step 2. Use the left/right cursor keys to select the LOG status field.

Step 3. Use the [START LOG] soft-keys to start a new log.

Soft-key	Function
START LOG	To start a new measurement log.

Step 4. After a new log has started, the measurement readings will be recorded into the meter's internal buffer. The options in the following table are available during this recording process:

Soft-key	Function
STOP	Stops the recording and temporarily saves the logs into the buffer. An exclamation mark will be added after the record counts (in the [LOG] status field) to remind you that there are recorded readings in the buffer that have not yet been processed.

SAVE TO USB	Saves the recorded readings in the buffer to an external USB flash drive. The internal buffer is cleared after this operation.
CLEAR BUFFER	Clears the internal buffer.
SAVE & STOP	Stops the recording and saves the recorded readings in the internal buffer to an external USB flash drive. The internal buffer will be cleared after the save operation. If an external USB flash drive is not plugged in, the meter will not stop the ongoing recording.
CLEAR & STOP	Stop recording and clears the internal buffer.

Step 5. When the internal buffer is full, "!FULL" will be added after the number of recorded counts(in the [LOG] status field). The following two operations are available in this situation:

Soft-key	Function
SAVE TO USB	Saves the recorded readings in the buffer to an external USB flash drive. The internal buffer is cleared after this operation.
CLEAR BUFFER	Clears the internal buffer.

Before saving the recorded readings in the internal buffer to the external USB flash drive, remember to plug the external USB drive into the USB port on the front panel.

The recorded readings will be saved in a subdirectory named MEAS DATA, whose parent directory will have the same name as the T3LCR model being used. See the example in below:

Example:
F:\T3LCR1300\MEAS DATE\ MEAS0000.CSV

Up to 9999 recording files can be saved, with their file names from 0001.csv-9999.csv.

The size of the internal buffer can be adjusted in SYSTEM→SYSTEM CONFIG→DATA BUFFER setting field. The maximum data buffer size is 10000.

4.2 [OPEN/SHORT] Page

When you press the [Measure] key and the [OPEN SHORT] soft-key, the [OPEN SHORT] page appears.

In this page, the OPEN/SHORT/SPOT correction for correcting the stray admittance and residual impedances can be performed.

The OPEN and SHORT function performs open or short correction over a range of fixed trimming points. The correction for all other frequencies are interpolated from those fixed trimming points. Please refer to the 12.1 Specification page to see what the trimming frequency points are for each T3LCR model.

The SPOT function will perform open, or short correction at a user-defined "spot" frequency.

In the [OPEN SHORT] page, you can configure each of the following controls with the cursor placed in the corresponding field:

- Open correction [OPEN]
- Short correction [SHORT]
- SPOT correction [SPOT]

Figure 4-2 [OPEN/SHORT] Page



4.2.1 Open Correction [OPEN]

The T3LCR Series' OPEN correction capability cancels errors due to the stray admittance (G, B) in parallel with the device under test (Refer to Figure 4-3).

Figure 4-3 Stray Admittance

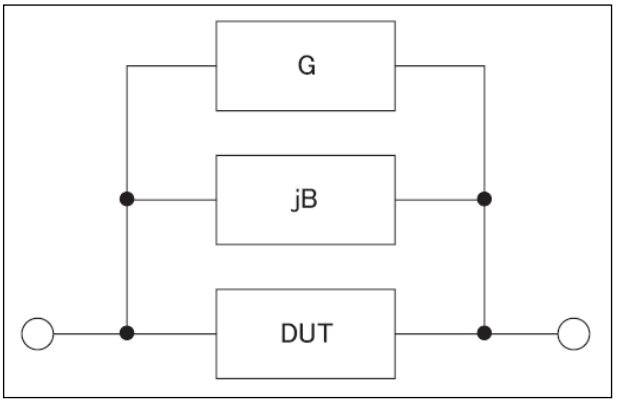

The OPEN correction data is taken at all preset frequency points, independent of the test frequency you set. Refer to the tables on page 130 for the trimming frequency point lists for each model.

To perform open correction

Step 1. Press the [Measure] key.

Step 2. Press the [OPEN SHORT] soft-key.

Step 3. Use the cursor key to select the [OPEN] field.

Soft-key	Function
ON	Enables open correction.

OFF	Disables open correction.
MEAS OPEN	Starts open correction (AC).
DCR OPEN	Starts open correction (DC).

Step 4. Press the [MEAS OPEN] or [DCR OPEN] soft-key. A dialog message, "Open-circuit the test terminals" will appear.

Step 5. Connect the test fixture to the BNC terminals. Do not connect the DUT to the fixture.

Step 6. Press the [OK] soft-key. The T3LCR will then measure the open admittances (capacitance and conductance) at the all test frequency points.

During the measurement, an "LCR OPEN measurement in progress" dialog message is shown on the display.

When the measurement has finished, "Correction finished" is displayed. During the measurement, you can press the [ABORT] soft-key to abort the OPEN correction.

Step 7. After the OPEN measurement has finished, the meter will enable OPEN correction automatically. You can, however, still choose to manually enable or disable OPEN correction by depressing the ON or OFF soft-keys.

4.2.2 Short Correction [SHORT]

The short correction feature of the T3LCR Series compensates for any residual impedances (R,X) that may exist outside of calibration, such as the impedance of the cables and the DUT connection points.

See Figure 4-4 Residual Impedances.

Figure 4-4 Residual Impedances

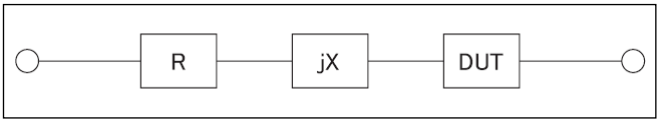

To perform short correction

Step 1. Press the [Measure] key.

Step 2. Press the [OPEN SHORT] soft-key.

Step 3. Use the cursor key to select the [SHORT] field.

Soft-key	Function
ON	Enables short correction.
OFF	Disables short correction.
MEAS SHORT	Starts short correction (AC).
DCR SHORT	Starts short correction (DC).

Step 4. Press the [MEAS SHORT] or [DCR SHORT] soft-key, a dialog message, "Short-circuit the test terminals", will appear.

Step 5. Connect the test fixture to the BNC terminals and short-circuit the test terminals.

Step 6. Press the [OK] soft-key. The T3LCR measures the short impedances (inductances and resistance) at the all test frequency points.

During the measurement, an "LCR SHORT measurement in progress" dialog message is shown on the display.

When the measurement has finished, "Correction finished" is displayed. During the measurement, you can press the [ABORT] soft-key to abort the SHORT correction.

Step 7. After the SHORT measurement has finished, the meter will enable SHORT correction automatically. You can, however, still choose to manually enable or disable SHORT correction by depressing the ON or OFF soft-keys.

4.2.3 SPOT Correction

The spot correction function involves performing open/short correction at user-specified frequency points. You can specify 1 frequency point.

To specify frequency points and perform open correction

Step 1. Press the [Measure] key.

Step 3. Press the [OPEN SHORT] soft-key.

Step 3. Use the cursor key to select the [SPOT] field.

Step 4. Enter the frequency using the numeric entry keys.

Soft-key	Function
ON	Enable this point.
OFF	Disables this point.
CURRENT FREQ	Use current frequency
MEAS OPEN	Starts open correction.
MEAS SHORT	Starts short correction

Step 4. Press the [MEAS OPEN] soft-key. A dialog message, "Open-circuit the test terminals", will appear.

Step 5. Connect the test fixture to the BNC terminals. Do not connect the DUT to the test fixture.

Step 6. Press the [OK] soft-key. The T3LCR measures the open admittances (capacitance and conductance) at this frequency point.

During the measurement, an "OPEN measurement in progress" dialog message will be shown on the display.

When the measurement has finished, "Correction finished", will be displayed. During the measurement, you can press the [ABORT] soft-key to abort open correction.

To specify frequency points and perform short correction

Step 1. Press the [MEAS SHORT] soft key, a dialog message, "Short-circuit the test terminals", will be displayed.

Step 2. Connect the test fixture to the BNC terminals and short-circuit the test terminals.

Step 3. Press the [OK] soft-key. The T3LCR measures the short impedances (inductances and resistance) at this frequency point.

During the measurement, a "SHORT measurement in progress" dialog message will be shown on the display.

When the measurement has finished, "Correction finished" is displayed on the screen. During the measurement, you can press the [ABORT] soft-key to abort short correction.

4.3 [LIST SETUP] Page

Press the [Measure] key and press the [LIST SETUP] soft-key to open the [LIST SETUP] page. The List Measure feature can perform automatic sweep measurements by sweeping the frequency or signal level through a maximum 10 list points.

Before using the List Measure feature, you have to configure the list setup.

In the [LIST SETUP] page, you can configure each of the following list measurement controls with the cursor placed in the corresponding field.

- Function mode [FUNC]
- Test mode [MODE]
- Parameter selection [FREQ[Hz], VOLT[V], CURR[A]]
- Limit parameter selection [LMT]
- Lower and upper limits [LOWER] [UPPER]

Figure 4-5 [LIST SETUP] Page

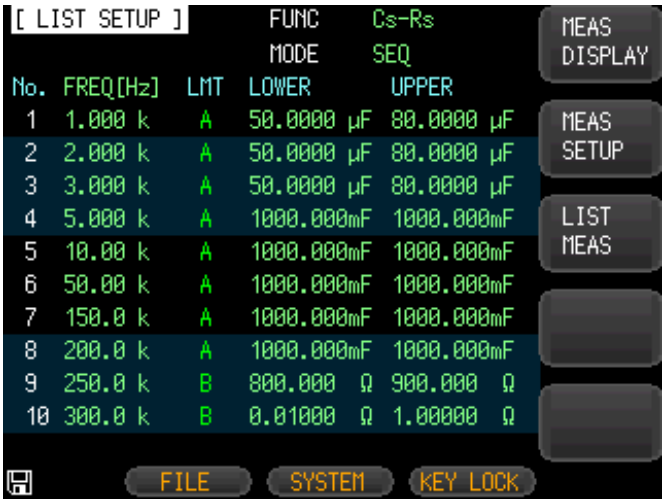

4.3.1 Measurement Function [FUNC]

Select the primary and the secondary measurement here.

4.3.2 Test Mode [MODE]

The [LIST MEAS] page will execute a list of up to 10 swept frequency or amplitude tests.

When [MODE] is set to SEQ and [TRIG] is set to MAN, the [LIST MEAS] function will automatically execute each test step on the list in sequence until the last step is executed. The meter will then wait for the trigger button to be depressed before repeating the process.

When [MODE] is set to STEP and [TRIG] is set to MAN, the [LIST MEAS] function will automatically execute the first test step. The meter will then wait for the trigger button to be depressed before executing the next step. This process is repeated for each step on the list.

Soft-key	Function
SEQ	Sequence measure all step by one trigger.
STEP	Measure one step by one trigger.

There are 4 available trigger modes in the [LIST MEAS] page.

Trigger Mode	Function
INT	Trigger by the meter's internal trigger source.
MAN	Trigger by pressing the trigger button.
EXT	Trigger by sending a signal to the trigger pin on the handler interface.
BUS	Trigger by the RS-232/USB port.

4.3.3 List Measurement Parameters

The list parameter used for the list measurement can be the measurement frequency or the signal level [V/A]. Use the list point field to specify the list measurement parameter.

To specify the list sweep measurement parameter

Step 1. Press the [Measure] key.

Step 2. Press the [LIST SETUP] soft-key.

Step 3. Use the cursor key to select FREQ or VOLT or CURR field.

Step 4. Use the soft-keys to select list measurement parameter.

Soft-key	Function
FREQ	Uses frequency as the list measurement parameter
VOLT	Uses voltage as the list measurement parameter
CURR	Uses current as the list measurement parameter

4.3.4 List Point and Limit Modes

The List measurement feature supports up to 10 list points as well as measurement limit values. Each list point can be turned on or off.

To configure the list points:

Step 1. Press the [Measure] key.

Step 2. Press the [LIST SETUP] soft-key.

Step 3. Use the cursor key to select one of the list point field (1 through 10)

Step 4. Use the soft-keys to turn on/off the current point.

Soft-key	Function
ON	Turn on current point
OFF	Turn off current point

Step 5. Enter the list point value (maybe the frequency value or the signal level voltage/current value). When you enter the frequency value, the soft-key labels change to unit labels (Hz, kHz). When you enter the signal level voltage value, you don't need to enter units. When you enter the signal level current value, the soft-key labels change to unit labels (uA, mA).

Step 6. Using the cursor keys, select the LMT field.

Step 7. Configure the limit parameter by pressing the appropriate soft-key.

Soft-key	Function
PRIMARY A	Uses the primary parameter as the limit parameter.
2NDARY B	Uses the secondary parameter as the limit parameter.
OFF	Turns OFF the limit feature.

Step 8. Using the cursor keys, select the LOWER field.

Step 9. Enter the lower limit value.

Step 10. Using the cursor keys, select the UPPER field and enter the higher limit value.

Step 11. Repeat Step 4 to Step 10.

4.4 [LIST MEAS] Page

The [LIST MEAS] page will appear when you press the [Measure] key and then the [LIST MEAS] soft-key.

Figure 4-6 [LIST MEAS] Page

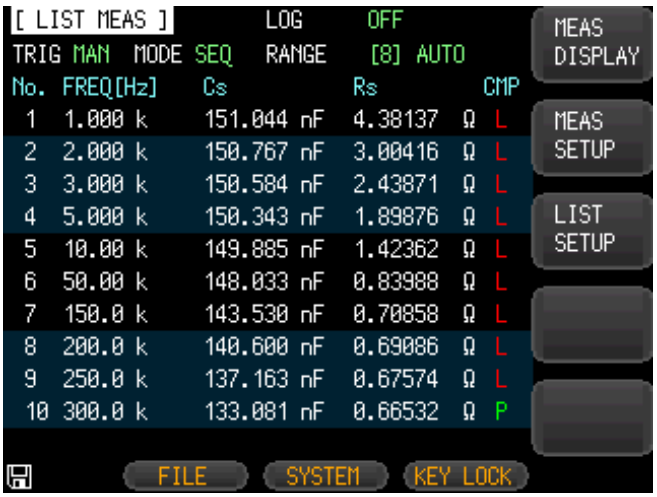

On the [LIST MEAS] page, the list points are swept and the measurement results are compared to the limits. During a sweep, an asterisk mark (*) will appear on the left side of the list point currently being measured.

This page provides the following information:

- Trigger mode [TRIG].
- Test mode [MODE].
- Range mode [RANGE].
- Measurement recording [LOG].

These conditions can be set from [MEAS DISPLAY] page and [SETUP] page.

4.4.1 Trigger Mode [TRIG]

Select the trigger mode for LIST MEAS here; manual trigger is generally used for LIST MEAS.

When entering the LIST MEAS function, the default trigger mode is the manual trigger mode.

You can use the cursor button to highlight the TRIG source field and select the other available trigger sources.

Trigger mode

When entering LIST MEAS for the first time, the system will set Trig Mode to MAN.

Trig Mode	Function
INT	Internal Trigger. All ten list points are swept continuous.
MAN	Manual Trigger. Each time the instrument is triggered by [Trig] key, the list points are swept one by one.
EXT	External Trigger. Each time the instrument is triggered by the handler trigger pin, the list points are swept one by one.
BUS	BUS Trigger. Each time the instrument is triggered by SCPI command, the list points are swept one by one.

4.4.2 Test Mode [MODE]

The [LIST MEAS] page will execute a list of up to 10 swept frequency or amplitude tests.

When [MODE] is set to SEQ and [TRIG] is set to MAN, the [LIST MEAS] function will automatically execute each test step on the list in sequence until the last step is executed. The meter will then wait for the trigger button to be depressed before repeating the process.

When [MODE] is set to STEP and [TRIG] is set to MAN, the [LIST MEAS] function will automatically execute the first test step. The meter will then wait for the trigger button to be depressed before executing the next step. This process is repeated for each step on the list.

Test Mode

Soft-key	Function
SEQ	Sequence measure all step by one trigger.
STEP	Measure one step by one trigger.

There are 4 available trigger modes in the [LIST MEAS] page.

Trigger Modes	Function
INT	Trigger by the meter's internal trigger source.
MAN	Trigger by pressing the trigger button.
EXT	Trigger by sending a signal to the trigger pin on the handler interface.
BUS	Trigger by the RS-232/USB port.

4.4.3 Range Mode [RANGE]

Displays the selected measurement range for each measurement step; this field is here only for display, its content can't be changed here. If you need to change the measurement range; it can be done in the [MEAS DISPLAY] or [MEAS SETUP] function.

4.4.4 Measurement log [LOG]

The T3LCR has an internal data buffer that record up to 10000 measurement readings. These readings can be saved to an external USB drive in a .csv file format. These readings can then be opened on a PC using software such as Windows Excel. When the LOG function is active, the display is fixed to the [MEAS DISPLAY] screen. The [FUNC], [FREQ] and [LEVEL] settings are also fixed and cannot be changed.

Procedure for setting Log

Step 1. Press the [LIST MEAS] soft-key.

Step 2. Use the cursor keys to select the [LOG] status field.

Step 3. Use the [START LOG] soft-keys to start a new log.

Soft-key	Function
START LOG	To start a new measurement log.

Step 4. After a new log has started, the measurement readings will be recorded into the meter's internal buffer. The options in the following table are available during this recording process:

Soft-key	Function
SAVE & STOP	Stops the recording and saves the recorded readings in the internal buffer to an external USB flash drive. The internal buffer will be cleared after the save operation. If an external USB flash drive is not plugged in, the meter will not stop the ongoing recording.
CLEAR & STOP	Stop recording and clears the internal buffer.

Step 5. When the internal buffer is full, "!FULL" will be added after the number of recorded counts(in the [LOG] status field). The following two operations are available in this situation:

Soft-key	Function
SAVE TO USB	Saves the recorded readings in the buffer to an external USB flash drive. The internal buffer is cleared after this operation.
CLEAR BUFFER	Clears the internal buffer.

Before saving the recorded readings in the internal buffer to the external USB flash drive, remember to plug the external USB drive into the USB port on the front panel.

The recorded readings will be saved in a subdirectory named LIST DATA, whose parent directory will have the same name as the T3LCR model being used. See the example in below:

Example: F:\T3LCR1300\LIST DATE\LIST0000.CSV

Up to 9999 recording files can be saved, with their file names from 0001.csv-9999.csv.

The size of the internal buffer can be adjusted in SYSTEM→SYSTEM CONFIG→DATA BUFFER setting field. The maximum data buffer size is 10000.

4.5 [ENLARGE DISPLAY] Page

Only four measurement values will be shown in this simplified display mode: The primary measurement parameters, the secondary measurement parameters and two monitored parameters such as Δ, Δ%, Iac or Vac, etc.

4.5.1 Enlarge Display

Press the ENLARGE soft-key in the [MEAS DISPLAY] to enter the [ENLARGE DISPLAY] mode (simplified display mode); on the contrary, press the NORMAL soft-key in the [ENLARGE DISPLAY] mode to quit the [ENLARGE DISPLAY] mode and return to the regular [MEAS DISPLAY] mode.

Two biggest readings you see in the upper part of the [ENLARGE DISPLAY] mode are the primary and the secondary measurement parameters while the two other smaller readings in the lower part of the display are the monitored parameters you chose to be displayed. The PASS/FAIL result of the Direct Comparison function (see 4.5.2 Direct Comparison Function) for the DUT currently being measured will be displayed in the bottom right corner of the enlarged display.

The Direct Comparison function allows you to see whether the currently measured DUT is within the acceptable tolerance range without the complexity of the BIN sorting function.

Figure 4-7 [ENLARGE DISPLAY] Page

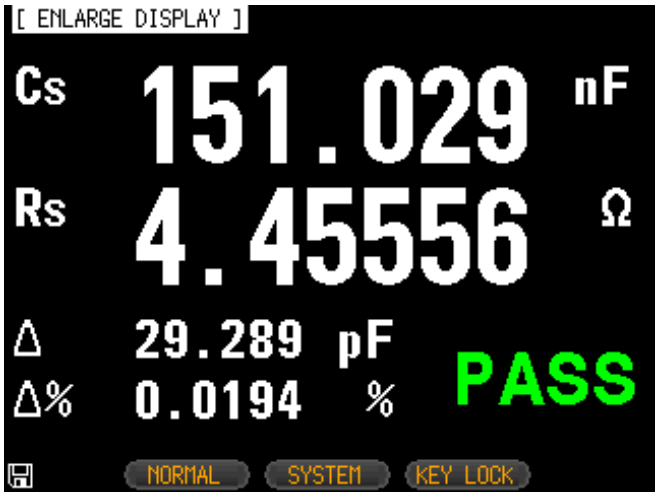

4.5.2 Direct Comparison Function

The Direct Comparison function can be turned on in the [BIN SETUP] page. When the number of bins is set to 1 in the [BIN SETUP] page, the Direct Comparison function will be activated for the [ENLARGE DISPLAY] mode. To activate Direct Comparison, choose "1-BINS" in the [BIN SETUP] page. Please refer to the Total Number of Bins [#-BINS] chapter on page 61 on how to choose "1-BINS".

Figure 4-8 Direct Comparison setting



5. SETUP KEY

This section includes the following information:

- MEAS SETUP page
- BIN SETUP page
- BIN MEAS page
- BIN COUNT page

Every time or everywhere you can press the [Setup] key to open the [MEAS SETUP] page.

5.1 [MEAS SETUP] Page

NOTE In [MEAS SETUP] page, the Instrument does not display test result and sorting result, but testing still in progress.

Figure 5-1 [MEAS SETUP] Page

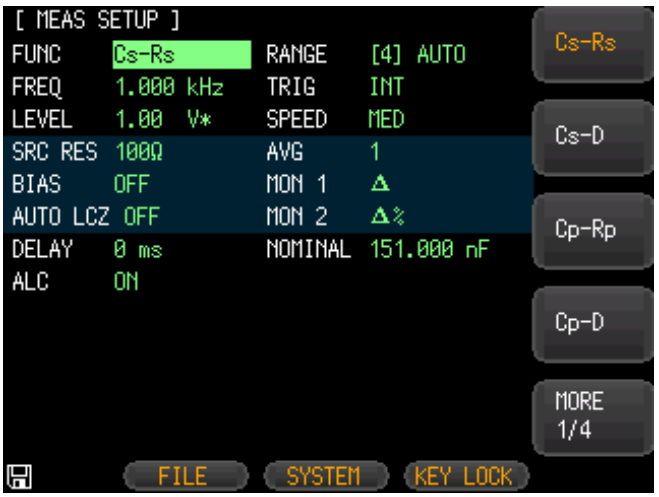

In the [MEAS SETUP] Page, you can configure each of the following measurement controls with the cursor placed in the corresponding field.

- Measurement Function [FUNC] *1
- Impedance range [RANGE] *1
- Test Frequency [FREQ] *1
- Trigger Mode [TRIG] *1
- Test Signal Voltage Level [LEVEL] *1
- Measurement Speed [SPEED] *1
- Source Output Impedance [SRC RES]
- Averaging Factor [AVG]
- DC Bias Voltage [BIAS]
- Auto LCZ Function [AUTO LCZ]
- Monitor 1 and Monitor 2 Parameter Select [MON 1] [MON 2]
- Measurement Delay Time [DELAY]
- Auto Level Control [ALC]

NOTE *1. These six settings can be set in the [MEAS DISPLAY] page and the [BIN COUNT] page. Please refer to section 4.1 [MEAS DISPLAY] Page on page 23 for details.

5.1.1 Source Output Impedance [SRC RES]

The Source output impedance can be set to 30Ω, 50Ω or 100Ω.

If you use T3LCR Series to test a smaller inductor, please use 30Ω.

If you need to compare test results with Keysight E4980A, select 100Ω.

Procedure for setting source output impedance

Step 1. Press the [Setup] key.

Step 2. Use the cursor key to select the [SRC RES] field.

Step 3. Use the soft-keys to set the source output impedance.

Soft-key	Function
30Ω	30Ω
50Ω	50Ω
100Ω	100Ω

5.1.2 Averaging Factor [AVG]

The averaging feature allows you to obtain moving average values of successive measurement results.

You can specify the averaging factor from integer 1 to integer 256.

To set up the averaging factor

Step 1. Press the [Setup] key.

Step 2. Use the cursor key to select [AVG] field.

Step 3. Use the soft-keys or number keys to enter averaging factor.

Soft-key	Function
INCR +	Increments the averaging factor in steps of 1, 2, 4, 8, 16, 32, 64, 128 and 256.
DECR -	Decrements the averaging factor in steps of 1, 2, 4, 8, 16, 32, 64, 128 and 256.

5.1.3 DC Bias Voltage [BIAS]

This function will apply a DC bias voltage onto the DUT while LCR meter is performing its AC measurement on the DUT. The settable DC bias voltage range is from -2.5V-2.5V.

Procedure for setting DC bias voltage

Step 1. Press the [Setup] key.

Step 2. Use the cursor key to select [BIAS] field.

Step 3. Use the soft-keys to select DC bias voltage.

Soft-key	Function
OFF	Turn off the DC bias voltage
2V	2V voltage is applied to the device under test.
1.5V	1.5V voltage is applied to the device under test.
-1.5V	-1.5V voltage is applied to the device under test.
-2V	-2V voltage is applied to the device under test.

Bias Voltage range	Resolution
0.01V ≦ DC BIAS ≦ 2.50V	0.01V
-2.50V≦ DC BIAS ≦ -0.01V	0.01V

5.1.4 Auto LCZ Function [AUTO LCZ]

Auto LCZ Function can help you to select a proper measurement parameter.

NOTE Auto LCZ Function cannot judge complex components, please do not rely entirely on this function to measure.

To set up the Auto LCZ Function

Step 1. Press the [Setup] key

Step 2. Use the cursor key to select [AUTO LCZ] field

Step 3. Use the soft-keys to turn on/off the Auto LCZ Function.

Soft-key	Function
OFF	Turn off the Auto LCZ Function
ON	Turn on the Auto LCZ Function. When Auto LCZ Function is set to ON, "AUTO-LCZ" will display on [FUNC] field.

NOTE The Auto LCZ Function will be turned off after you set the measurement function.

5.1.5 Monitor 1 and Monitor 2 [MON 1][MON 2]

The T3LCR Series can monitor the other two parameters.

NOTE Additional monitoring parameters **do not** increase the instrument measurement time. Monitor parameter display in [MEAS DISPLAY] page and [ENLARGE] page.

Procedure for setting monitor parameters (monitor 1 and monitor 2)

Step 1. Press the [Setup] key.

Step 2. Use the cursor key to select [MON 1] or [MON 2] field.

Step 3. Use the soft-keys to select DC bias voltage.

Soft-key	Function
OFF	Turn off the monitor
Z	Absolute value of impedance
D	Dissipation factor
Q	Quality factor(=1/D)
Vac	Test signal Voltage
Iac	Test signal Current
Δ	Absolute deviation value
Δ%	Relative deviation value
θr	Phase radian
θd	Phase angle
R	Resistance (=Rs)
X	Reactance
G	Conductance
B	Sustenance
Y	Absolute value of admittance

5.1.6 Measurement Delay [DELAY]

This setting decides how long the meter will wait to commence a measurement after the trigger signal is received. Settable range: 0ms to 60s.

5.1.7 AUTO LEVEL CONTROL [ALC]

The automatic level control (ALC) feature adjusts the voltage across the DUT or the current through the DUT to match the voltage/current level setting. Using this feature, you can try to ensure a constant signal level (voltage or current) is applied to the DUT.

NOTE

In situations when the actual measuring Vac or Iac goes beyond the extent that the ALC can regulate, a warning message, "Failed! ALC can't regulate!", will be shown at the bottom of the screen to indicate to the operator that the ALC can no longer regulate Vac/Iac.

An asterisk will be shown beside the LEVEL V or A unit when the ALC is turned on.

Soft-key	Function
OFF	Turn off the Auto Level Control Function
ON	Turn on the Auto Level Control Function

5.1.8 Nominal Value [NOMINAL]

The Nominal Value parameter becomes displayed and settable only when MON1 and MON2 are set in either Δ or Δ% modes. The Nominal Value and the measured main parameter will then be used to perform the Δ or Δ% calculations.

5.2 [BIN SETUP] Page

Press [Setup] key and press the [BIN SETUP] soft-key to open [BIN SETUP] page.

This page allows you to configure the T3LCR Series' built-in comparator. The built-in comparator can sort DUTs into a maximum of 10 levels (BIN1 through BIN9 and OUT) using up to nine sets of primary parameter limits along with one set of secondary parameter limits.

In addition, DUTs that fall within the primary parameter limits but are out of the secondary parameter limits can be sorted into an auxiliary bin.

To take full advantage of the comparator, T3LCR Series is equipped with a handler interface for use in conjunction with the comparator. All 10 bin signals can output to your PLC via the handler interface.

In the [BIN SETUP] page, you can configure each of the following controls with the cursor placed in the corresponding field.

- Measurement Function [FUNC]
- Comparator ON/OFF [COMP] *1
- Auxiliary bin ON/OFF [AUX] *1
- Nominal value [NOM]
- Primary parameter comparator limit mode [MODE]
- Beep feature [BEEP]
- Primary parameter total bins [BINS]

NOTE

*1. These two settings can also be set in the [BIN MEAS] page.

Figure 5-2 [BIN SETUP] Page

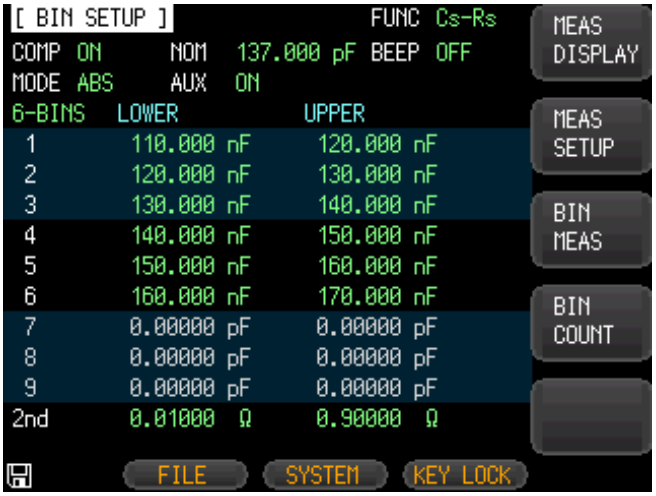

5.2.1 Measurement Function [FUNC]

The T3LCR Series simultaneously measures four components of the complex impedance (parameters) in a measurement cycle. These include primary parameter, secondary parameter and two monitor parameters. Please refer to the 4.1 [MEAS DISPLAY] Page section on 23 for details.

5.2.2 Comparator Function ON/OFF

T3LCR Series' built-in comparator can sort DUTs into a maximum of 10 bins (BIN1 to BIN9 and OUT), using a maximum of nine pairs of primary parameter limits and one pair of secondary parameter limits.

A DUT can be sorted into the auxiliary BIN (AUX) when the primary parameter is within the limits but the secondary parameter is not.

Figure 5-3 Page Comparator Workflow

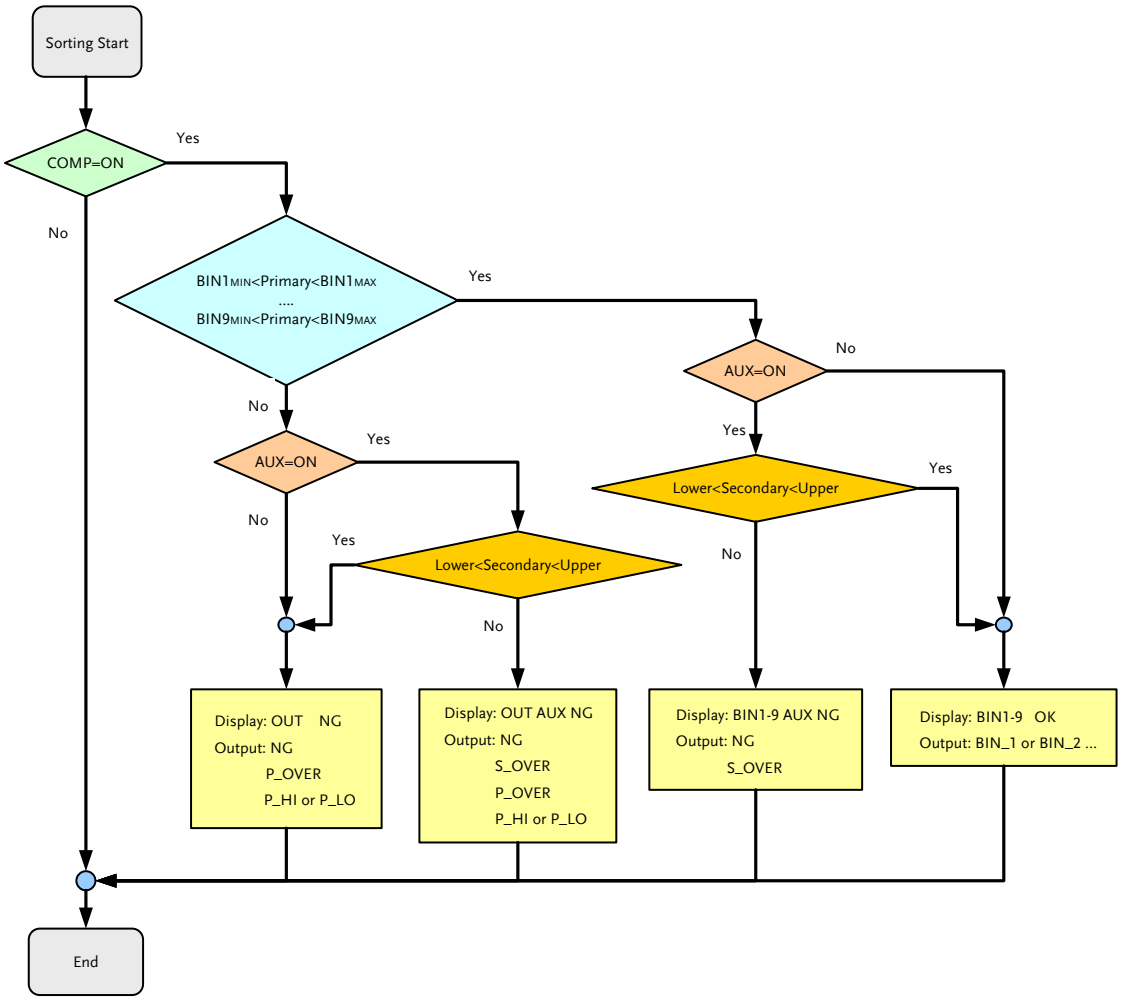

Procedure for setting the comparator function [COMP]

Step 1. Press the [Setup] key.

Step 2. Press the [BIN SETUP] soft-key.

Step 3. Use the cursor key to select [COMP] field.

Step 4. Use the soft-keys to turn on/off the comparator.

Soft-key	Function
OFF	Turns OFF the COMP function
ON	Turns ON the COMP function

5.2.3 Auxiliary Bin [AUX]

After AUX is turned on, DUTs that do not fall within the primary parameter limit values are sorted as OUT. In addition, DUTs that fall within the primary parameter limits but are out of the secondary parameter limits are sorted into the auxiliary (AUX) bin.

Procedure for turning ON/OFF the auxiliary bin [AUX]

Step 1. Press the [Setup] key.

Step 2. Press the [BIN SETUP] soft-key.

Step 3. Use the cursor key to select [AUX] field.

Step 4. Use the soft-keys to turn on/off the auxiliary bin.

Soft-key	Function
ON	Turns ON the auxiliary bin
OFF	Turns OFF the auxiliary bin

5.2.4 Primary Parameter Comparator limit mode [MODE]

You can specify the primary parameter limit values in one of the following 3 ways:

- Tolerance mode [%][Δ]
  In tolerance mode, the comparison limit values are based on the deviations from the specified nominal value, which can be specified in the [NOM] field. You configure the tolerance mode limit values as a deviation percentage (%) or absolute (Δ) parameter value.
- Sequential mode [SEQ]
  In sequential mode, the comparison limit values are based on the absolute value of the measurement. When you configure these limit values, you have to first define the minimum value and then the maximum value.
- Nominal Value [NOM]
  Sets the nominal value (reference value) for the ABS and PER compare modes. Use the number keys to enter the value and the unit.

Absolute mode[ABS]

Absolute value (Δ) = UNKNOWN value – nominal value

Figure 5-4 Absolute mode

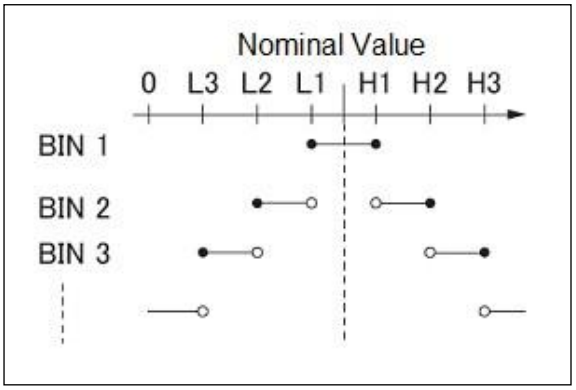

- • Includes the point
- ○ Excludes the point

Percentage mode [PER]

Deviation percentages (%) = Absolute value (Δ)/nominal value × 100%

Figure 5-5 Percentage mode

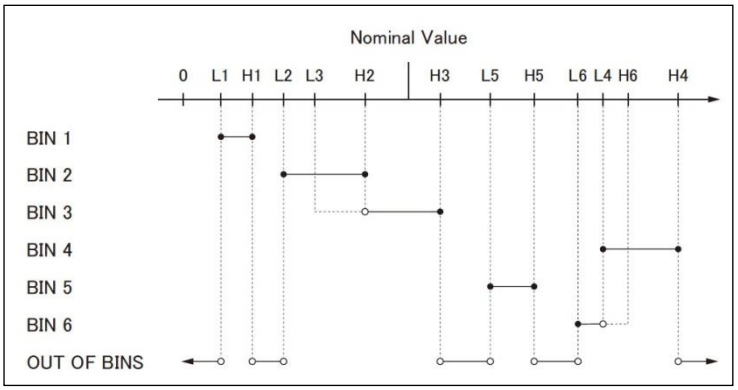

- • Includes the point
- ○ Excludes the point

Sequential mode[SEQ]

Figure 5-6 Sequential mode

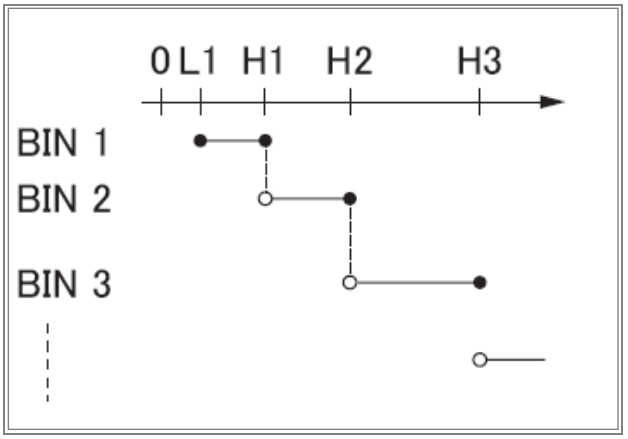

- • Includes the point
- ○ Excludes the point

In Sequential mode, the comparison limit values are based on the absolute value of the measurement. The nominal value does not need to participate in operation.

To set up the comparator limit mode

Step 1. Press the [Setup] key.

Step 2. Press the [BIN SETUP] soft-key.

Step 3. Use the cursor key to select [MODE] field.

Step 4. Use the soft-keys to select comparator mode.

Soft-key	Function
ABS	Absolute parameter values
PER	Deviation percentages
SEQ	Sequential mode

5.2.5 Nominal value for tolerance mode

You must configure the nominal value when you use tolerance mode as the limit mode for the primary parameter.

In sequential mode the nominal value does not affect sorting. In sequential mode, you do not need to configure the nominal value.

To enter the nominal value

Step 1. Press the [Setup] key.

Step 2. Press the [BIN SETUP] soft-key.

Step 3. Use the cursor key to select [NOM] field.

Step 4. Enter the nominal value using the entry keys. Use the soft-key to select the unit.

5.2.6 Beep feature

The beep feature behaves differently depending on which beep mode is in effect.

To set up the beep feature

Step 1. Press the [Setup] key.

Step 2. Press the [BIN SETUP] soft-key.

Step 3. Use the cursor key to select [BEEP] field.

Step 4. Use the soft-keys to set beep feature.

Soft-key	Function
OFF	Turns the beep feature off
PASS	Beep when the comparator sorting result is OK
FAIL	Beep when the comparator sorting result is NG

5.2.7 Total Number of Bins [#- BINS]

T3LCR series specify nine bins (1-BINS to 9-BINS).

To choose total number of the bins

Step 1. Press the [Setup] key.

Step 2. Press the [BIN SETUP] soft-key.

Step 3. Use the cursor key to select [#-BINS] field.

Step 4. Use the soft-keys to select beep tone.

Soft-key	Function
1-BINS	Set to 1 bin
2-BINS	Set to 2 bins
3-BINS	Set to 3 bins
4-BINS	Set to 4 bins
5-BINS	Set to 5 bins
6-BINS	Set to 6 bins
7-BINS	Set to 7 bins
8-BINS	Set to 8 bins
9-BINS	Set to 9 bins

5.2.8 Lower and Upper Limits

T3LCR Series built-in comparator can sort DUTs into a maximum 10 levels (Bin1 through Bin9 and OUT) using up to nine sets of primary parameter limits along with one set of secondary parameter limits.

To enter the limit values for tolerance mode

Step 1. Press the [Setup] key.

Step 2. Press the [BIN SETUP] soft-key.

Step 3. Use the cursor key to select [BIN 1 LOWER] field

Step 4. Enter the limit value using the entry keys.

When in the ABS and SEQ mode, please enter the unit using the soft-keys. When in the PER mode, the unit is %.

Step 5. Repeat Step 4 using the cursor keys until you have entered all limit values.

Step 6. Use the cursor key to select [2nd LOWER] field and enter the lower limit value for the secondary parameter.

Step 7. Select [2nd UPPER] field to enter the upper limit value.

5.3 [BIN MEAS] Page

When the [Setup] key and the [BIN MEAS] soft-key is pressed, the [BIN MEAS] page appears. The bin sorting results are displayed in larger characters while the measurement results are shown in normal characters.

Figure 5-7 [BIN MEAS] Page



This page provides the following information:

- FUNC, RANGE, FREQ, LEVEL, TRIG, LEVEL, SPEED: These conditions can be set from [MEAS DISPLAY] page.
- Comparator function ON/OFF [COMP].
- Auxiliary bin ON/OFF [AUX].

5.3.1 Comparator Function ON/OFF

T3LCR built-in comparator can sort DUTs into a maximum of 10 bins (BIN1 to BIN9 and OUT) using a maximum of nine pairs of primary parameter limits and one pair of secondary parameter limits.

A DUT which has the primary parameter within the limits, but secondary parameter is not, can be sorted into an auxiliary BIN (AUX).

See Figure 5-3 on page 57 for the Comparator Workflow.

Procedure for setting the comparator function [COMP]

Step 1. Press the [Setup] key.

Step 2. Press the [BIN MEAS] soft-key.

Step 3. Use the cursor key to select [COMP] field.

Step 4. Use the soft-keys to turn on/off the comparator.

Soft-key	Function
OFF	Turns OFF the COMP function
ON	Turns ON the COMP function

5.3.2 Auxiliary Bin [AUX]

After AUX is turned on, DUTs that do not fall within the primary parameter limit values are sorted as OUT. In addition, DUTs that fall within the primary parameter limits but out of the secondary parameter limits are sorted into the auxiliary (AUX) bin.

Procedure for turning ON/OFF the auxiliary bin [AUX]

Step 1. Press the [Setup] key.

Step 2. Press the [BIN MEAS] soft-key.

Step 3. Use the cursor key to select [AUX] field.

Step 4. Use the soft-keys to turn on/off the auxiliary bin.

Soft-key	Function
ON	Turns ON the auxiliary bin
OFF	Turns OFF the auxiliary bin

5.4 [BIN COUNT] Page

When the [Setup] key and the [BIN COUNT] soft-key is pressed, the [BIN COUNT] page appears.

This page provides the following information:

- Counter function [COUNT]

Figure 5-8 [BIN COUNT] Page

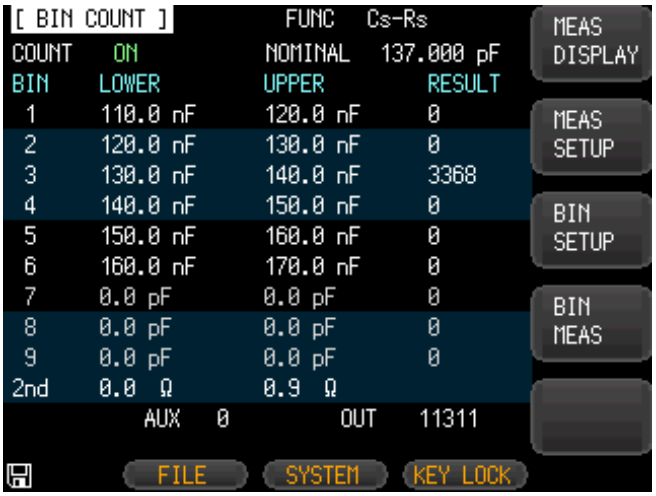

5.4.1 Counter Function [COUNT]

The number of DUTs sorted into each bin is counted while the unit sorts the DUTs into the appropriate bins using the comparator function.

When the maximum count of 99999999 is reached, the counting operation stops and the overflow message "--------" appears.

Set the Counter:

Step 1. Press the [Setup] key.

Step 2. Press the [BIN COUNT] soft-key.

Step 3. Use the cursor key to select [COUNT] field.

Step 4. Use the soft-keys to set counter function.

Soft-key	Function
COUNT ON	Turns the counter function on
COUNT OFF	Turns the counter function off
RESET COUNT	The counter is reset when this key pressed.

6. SYSTEM CONFIGURATIONS

This section includes the following information:

- SYSTEM CONFIG page
- SYSTEM INFO page
- SYSTEM SERVICE page

6.1 [SYSTEM CONFIG] Page

When the [Measure] or [Setup] key is pressed, followed by the [SYSTEM] bottom soft-key, the [SYSTEM CONFIG] page appears.

The following information can be configured in the [SYSTEM CONFIG] page.

- System Information
- System date and time configuration [DATE/TIME]
- Account settings [ACCOUNT]
- Key Beep setting [KEY BEEP]
- Baud rate setting [BAUD]
- Remote control interface [REMOTE]
- [HAND SHAKE]
- [ERROR CODE]
- [RESULT]
- [DATA BUFFER]
- [DEFAULT SET]

Figure 6-1 [SYSTEM CONFIG] Page

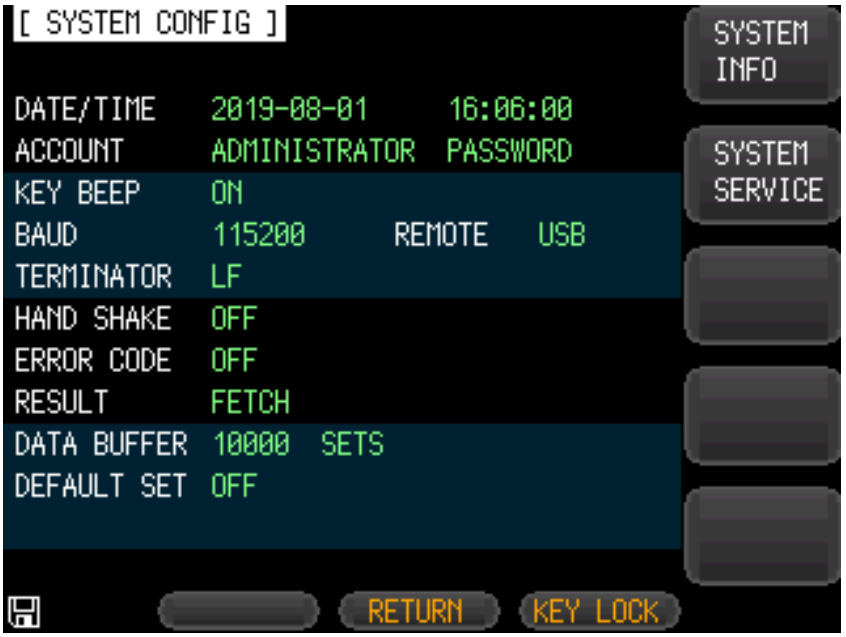

6.1.1 Setting the system date and time

T3LCR Series features a built-in 24-hour clock.

To change the date

Step 1. Press the [Measure] or [Setup] key.

Step 2. Press the [SYSTEM] bottom soft-key.

Step 3. Use the cursor key to select date field.

Step 4. Use the soft-keys to edit date.

Soft-key	Function
YEAR INCR+	Increases the year in steps of 1.
YEAR DECR-	Decreases the year in steps of 1.
MONTH INCR+	Increases the month in steps of 1.
DAY INCR+	Increases the day in steps of 1.
DAY DECR-	Decreases the day in steps of 1.

To change the time

Step 1. Press the [Measure] or [Setup] key.

Step 2. Press the [SYSTEM] bottom soft-key.

Step 3. Use the cursor key to select time field.

Step 4. Use the soft-keys to edit time.

Soft-key	Function
HOUR INCR+	Increases the hour in steps of 1.
HOUR DECR-	Decreases the hour in steps of 1.
MINUTE INCR+	Increases the minute in steps of 1.
MINUTE INCR-	Decreases the minute in steps of 1.
SECOND DECR+	Increases the second in steps of 1.
SECOND DECR-	Decreases the second in steps of 1.

6.1.2 Account Setting

The T3LCR Series has two accounts, administrator and user.

Administrator: All functions can be configured by the administrator except [SYSTEM SERVICE] page.

User: All functions can be configured by user except the [SYSTEM SERVICE] page and the [FILE] page.

To Change Account

Step 1. Press the [Measure] or [Setup] key.

Step 2. Press the [SYSTEM] bottom soft-key.

Step 3. Use the cursor key to select ACCOUNT field.

Step 4. Use the soft-keys to change account.

Soft-key	Function
ADMIN	Administrator
USER	User

Switch user mode to administrator mode, you must input a correct password.

To Change Administrator's Password

Step 1. Press the [Measure] or [Setup] key.

Step 2. Press the [SYSTEM] bottom soft-key.

Step 3. Use the cursor key to select [ADMINISTRATOR] field. When the ACCOUNT field is [USER], you should change to [ADMINISTRATOR].

Step 4. Use the soft-keys to change the password or delete the password.

Soft-key	Function
CHANGE PASSWORD	Input password (less than 9 numbers).
DELETE PASSWORD	The password will be removed.

NOTE	If you forget your password, please contact your local TELEDYNE distributor or TELEDYNE http://teledynelecroy.com.

6.1.3 KEY BEEP Setting

Key tone settings.

To set up the beep feature

Step 1. Press the [Measure] or [Setup] key.

Step 2. Press the [SYSTEM] bottom soft-key.

Step 3. Use the cursor key to select the [KEY BEEP] field.

Step 4. Use the soft-keys to set the beep settings.

Soft-key	Function
ON	Turn on the key beep feature.
OFF	Turn off the key beep feature.

6.1.4 Baud rate

Before you can control the T3LCR Series remotely via the built-in RS-232/USB controller, you have to configure the RS-232 RS-232/USB baud rate.

The T3LCR built-in RS-232/USB interface uses the SCPI language.

RS-232/USB configuration is as follows:

Data bits: 8-bit

Stop bits: 1-bit

Parity: none

To set up the baud rate

Step 1. Press the [Measure] or [Setup] key.

Step 2. Press the [SYSTEM] bottom soft-key.

Step 3. Use the cursor key to select the [BAUD] field.

Step 4. Use the soft-keys to select the baud rate.

Soft-key	Function
1200	Sets the baud rate to 1200.
9600	Sets the baud rate to 9600.
38400	Sets the baud rate to 38400.
57600	Sets the baud rate to 57600.
115200	Sets the baud rate to 115200.

6.1.5 Remote control interface

Selection the interface for PC/PLC remote control.

Soft-key	Function
RS232	Select RS-232 port as remote control
USB	Select USB port as remote control



Note

Only one mode is supported. Before selecting either a remote control mode, please connect its corresponding cable to appropriate port on the rear panel of the device.

For other setting items about remote control mode, please refer to chapter "Remote control" on page 89.

After the device detects the signal change on RS-232 or USB interface, the device will immediately communicate with the host at the setting serial transmission rate, and the keyboard will be locked as well.

In order to be able to communicate correctly, please confirm whether the setting serial transmission rate and stop bit are set correctly. Otherwise the device won't be able to communicate with host computer correctly.

6.1.6 TERMINATOR

The command terminator EOL uses the ASCII Line Feed character by default. (LF, Decimal 10, Hex 0x0A, or ASCII '\n')

The EOL of the command and the EOL of the command return data are the same.

The terminator (EOL) can change the three types:

1. LF (Line feed, Hex 0x0A).
2. CR (Carriage Return, Hex 0x0D).
3. CR+LF.

The T3LCR PC software only supports LF types.

Soft-key	Function
LF	Set up the EOL to LF(0Ah).
CR	Set up the EOL to CR(0Dh).
CR+LF	Set up the EOL to CR+LF(0D 0Ah).

6.1.7 Hand Shake

If handshaking is turned on, the meter will return the commands it received from the PC first before returning the result string of the command.

Example: PC sends idn?

The meter returns:

idn? T3LCR1300 RevC1.0

To set up the Hand Shake feature

Step 1. Press the [Measure] or [Setup] key.

Step 2. Press the [SYSTEM] bottom soft-key.

Step 3. Use the cursor key to select the [HAND SHAKE] field.

Step 4. Use the soft-keys to set the handshake setting.

Soft-key	Function
OFF	Turn off the Hand Shake feature.
ON	Turn on the Hand Shake feature.

6.1.8 Error Code

If the error code setting is set to on, the meter will return error codes if the wrong command or an invalid command is received to help you to debug your control program.

"*E00", //No error

"*E01", //"Bad command",

"*E02", //"Parameter error",

"*E03", //"Missing parameter",

"*E04", //"buffer overrun",

"*E05", //"Syntax error",

"*E06", //Invalid separator",

"*E07", //"Invalid multiplier",

"*E08", //"Numeric data error",

"*E09", //"Value too long",

"*E10", //"Invalid command"

"*E11", //"Unknown error"

To set up the Error Code feature

Step 1. Press the [Measure] or [Setup] key.

Step 2. Press the [SYSTEM] bottom soft-key.

Step 3. Use the cursor key to select the [ERROR CODE] field.

Step 4. Use the soft-keys to set the error code setting.

Soft-key	Function
OFF	Turn off the Error Code feature.
ON	Turn on the Error Code feature.

6.1.9 Result

If the Result setting it set to Auto, the meter will automatically send out the measurement results each time a test is finished; this setting is convenient especially when the meter is working with a sorting machine. The meter will start a test after receiving the trigger signal and then returns the test result to the sorting machine without the need to receive a 'fetch?' command from either the sorting machine or the control PC.

To set up the Result feature

Step 1. Press the [Measure] or [Setup] key.

Step 2. Press the [SYSTEM] bottom soft-key.

Step 3. Use the cursor key to select the [RESULT] field.

Step 4. Use the soft-keys to set.

Soft-key	Function
FETCH	The meter will not send out the test result after the test.
AUTO	The meter will send out the test result after the test.

6.1.10 DATA BUFFER

The data buffer setting sets the maximum number of record counts that the internal buffers can store; Settable range 1-10000.

To set up the Data Buffer feature

Step 1. Press the [Measure] or [Setup] key.

Step 2. Press the [SYSTEM] bottom soft-key.

Step 3. Use the cursor key to select the [DATA BUFFER] field.

Step 4. Enter the number of sets using the entry keys or use the soft-key to select the maximum number of sets.

Soft-key	Function
MAX	Sets the maximum record counts to be 10000 directly.

6.1.11 DEFAULT SET

To reset setting values (MEAS SETUP) and offset values (OPEN SHORT) to factory default, use the DEFAULT SET setting. The device can be quickly restored to its factory settings.

Default settings:

(MEAS SETUP):
- FUNC: Cp-D
- FREQ: 1kHz
- LEVEL: 1V
- RANGE: AUTO
- TRIG: INT
- SPEED: SLOW
- SRC RES: 100Ω
- BIAS: OFF
- AUTO LCZ: OFF
- DELAY: 0ms
- ALC: OFF
- AVG: 1
- MON1: OFF
- MON2: OFF

(OPEN SHORT):
- OPEN TEST: ON
- SHORT TEST: ON
- SPOT: OFF

To reset setting values to factory default:

Step 1. Press the [Measure] or [Setup] key.

Step 2. Press the [SYSTEM] bottom soft-key.

Step 3. Use the cursor key to select the [DEFAULT SET] field.

Step 4. Use the soft-keys to set.

Soft-key	Function
ON	To reset to default factory settings
OFF	No reset to factory default settings

6.2 [SYSTEM INFO] Page

When the [Measure] or [Setup] key is pressed followed by [SYSTEM] bottom soft-key, and then the [SYSTEM INFO] soft-key, the [SYSTEM INFO] page appears.

There are no configurable options in the [SYSTEM INFO] page.

Figure 6-2 [SYSTEM INFO] Page



7. FILE OPERATION

This chapter provides information on the file operation of the T3LCR Series.

You can save up to 10 files into the internal non-volatile memory.

7.1 [FILE] Page

When the [Setup] key is pressed followed by the [FILE] bottom soft-key, the [FILE] page appears.

Figure 7-1 [FILE] Page

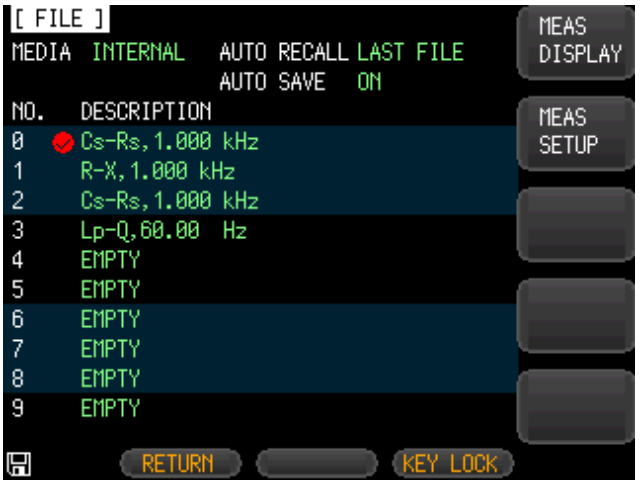

In this page, you can configure each of the following controls with the cursor placed in the corresponding field.

- Recall a file when the instrument starts up [AUTO RECALL].
- Automatically save a file when the instrument shuts down [AUTO SAVE].

7.1.1 [MEDIA]

The Media field is used to select the media source from either the meter's internal memory or an external USB flash drive. A maximum of up to 10 files can be accessed from either source.

Step 1. Press the [Setup] key.

Step 2. Press the [FILE] bottom soft-key.

Step 3. Use the cursor key to select the [MEDIA] field.

Step 4. Use the soft-keys to select the source.

Soft-key	Function
INTERNAL MEMORY	To access files from the meter's internal memory.
USB MEMORY	To access files from the external USB flash drive.

7.1.2 Recall a File at Startup [AUTO RECALL]

You can recall file0 or the current file when the instrument starts up.

To select auto recall file

Step 1. Press the [Setup] key.

Step 2. Press the [FILE] bottom soft-key.

Step 3. Use the cursor key to select the [AUTO RECALL] field.

Step 4. Use the soft-keys to select the recall option.

Soft-key	Function
LAST FILE	Last used file will be recalled at next startup.
FILE 0	File 0 will be recalled at next instrument startup.

7.1.3 Auto save data to last file [AUTO SAVE]

You can save the modified data into the last used file when the instrument power key is pressed.

To turn on/off the AUTO SAVE function

Step 1. Press the [Setup] key.

Step 2. Press the [FILE] bottom soft-key.

Step 3. Use the cursor key to select the [AUTO SAVE] field.

Step 4. Use the soft-keys to select the save option.

Soft-key	Function
ON	Auto save function will be enabled.
OFF	Turn off the auto save function.

7.1.4 File operation

To choose a file to operate

Step 1. Press the [Setup] key.

Step 2. Press the [FILE] bottom soft-key.

Step 3. Use the cursor keys to select a file (File name from 0 to 9).

Step 4. Use the soft-keys to perform an operation.

Soft-key	Function
SAVE	Save user configuration data into currently selected file.
RECALL	Recall configuration data from currently selected file.
ERASE	Erase the selected file. The user configuration data will be reset to the default at the next startup.
MODIFY DES	Modify the file description.

8. HANDLER INTERFACE

This chapter provides information about the T3LCR Series' built-in handler interface. It includes:

- Pin Assignment
- Circuit Diagram
- Timing Chart

The T3LCR Series' built-in handler interface outputs signals that indicate the end of a measurement cycle, the result of bin sorting by the comparator. In addition, the instrument accepts input of external trigger. You can use these signals to easily integrate the T3LCR Series with a component handler or system controller. This means that you can fully automate such tasks as component inspection, component sorting, and processing of quality management data for higher manufacturing efficiency.

8.1 Pin Assignment

Figure 8-1 Pin Assignment

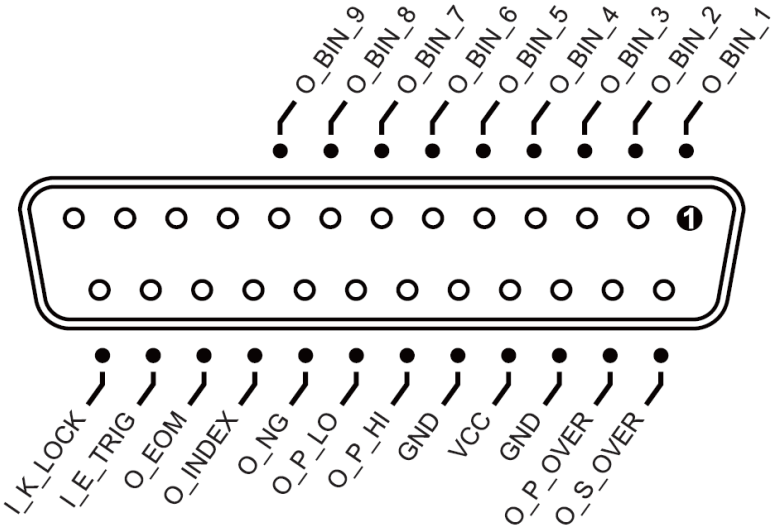

Output Pins

Table 8-1 Handler Interface Signals-Output Pins

Pin	Pin names	Signal descriptions
1	O_BIN_1	The sorting result is within bin1. Active low.
2	O_BIN_2	The sorting result is within bin2. Active low.
3	O_BIN_3	The sorting result is within bin3. Active low.
4	O_BIN_4	The sorting result is within bin4. Active low.
5	O_BIN_5	The sorting result is within bin5. Active low.
6	O_BIN_6	The sorting result is within bin6. Active low.
7	O_BIN_7	The sorting result is within bin7. Active low.
8	O_BIN_8	The sorting result is within bin8. Active low.
9	O_BIN_9	The sorting result is within bin9. Active low.
10		NC
11		NC
12		NC

13		NC
14	O_S_OVER	Over fail occurs on the secondary measurement parameter. Active low. (The signal on this pin is available only after AUX is turned on.)
15	O_P_OVER	Over fail occurs on the primary measurement parameter. Active low. The logic state of this pin = O_P_HI OR O_P_LO.
19	O_P_HI	Hi fail occurs on the primary measurement parameter. Active low.
20	O_P_LO	Low fail occurs on the primary measurement parameter. Active low.
21	O_NG	The overall test result is an over fail. Active low. The logic state of this pin = O_S_OVER OR O_P_OVER.
22	O_INDEX	This pin indicates that AD conversion is still ongoing. It is not yet finished when it is low.
23	O_EOM	A low level on this pin indicates that the test is still ongoing and not yet finished.

Input Pins

Table 8-2 Handler Interface Signals-Input Pins

Pin	Pin names	Signal descriptions
24	I_E_TRIG	External trigger input, Active on a rising edge.
25	I_K_LOCK	Key pad lock signal. Low on this pin locks the key pad on the front panel while a high level on this pin unlocks the key pad.

Power Pins

Table 8-3 Handler Interface Signals-Power Pins

Pin	Pin names	Signal descriptions
16,18	GND	GND pin for external power input
17	VCC	VCC pin for external power input

8.2 Connection

Electrical parameters

Interface power requirements: +12.4V-36VDC, 0.2A(Min).

Output circuit: Built-in pull-up resistors are internally connected to the collector pin of the output transistors. The output pins are isolated by photocouplers.

Input pins: Isolated by photocouplers.

WARNING

Warning: To avoid damaging the interface, ensure the external power does not exceed the +12.4-36V input range.

To avoid damaging the interface, turn off the meter before making any wired connections to this interface.

If users need to use the output pins of this interface to drive external relays, do use only small signal relays. Because the output pins of this interface are driven by photocouplers, the fan-out current is not sufficient to drive big relays; external transistors need to be used when users want to use the signals on these output pins to control big relays. The coil of the external relays must be in parallel with a flyback diode.

Circuit of input pins

Figure 8-2 Circuit of input pins

Sink Current: 5-50mA.

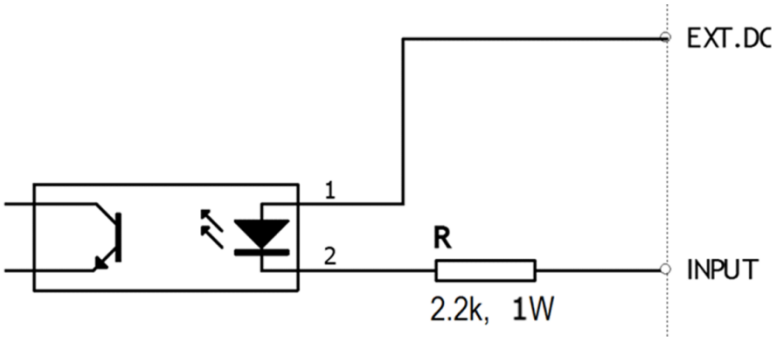

Circuit of output pins

Figure 8-3 Circuit of output pins (Bin sorting, Index, EOM)

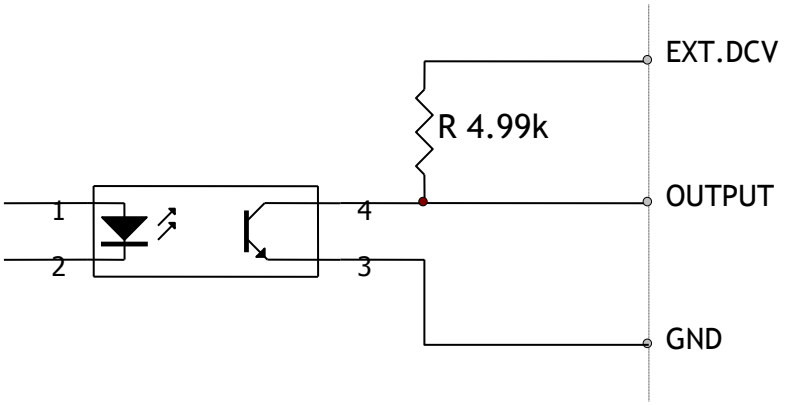

Maximum sourcing current: 5mA.

Maximum sinking current: 50mA

8.3 Timing Chart for Handler Interface

Figure 8-4 Timing chart

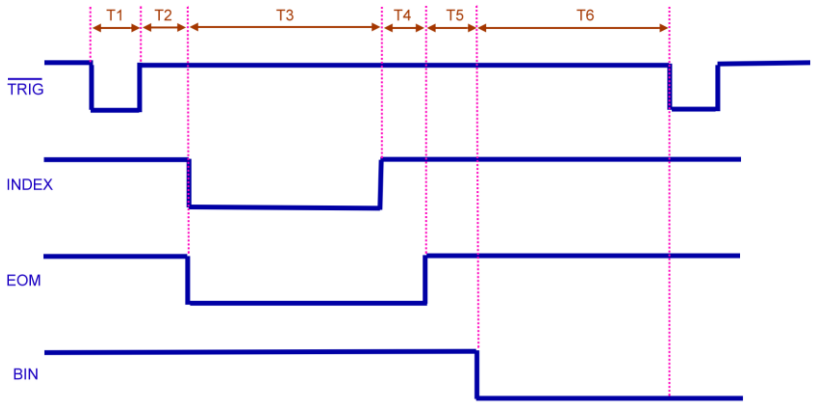

Table 8-4 Timing Definitions

Time segment			Minimum value
T1	Trigger pulse width		1msec
T2	Measurement circle	Trigger delay time	< 10usec
T3		Analog Measurement time	Depends on settings
T4		Digital math time	1msec
T5		Bin output delay time	200usec
T6	Trigger wait time after the output		0sec

9. EXAMPLES

This chapter covers basic measurement procedures as well as basic L, C, and R measurement theory. It also offers various measurement hints. After the descriptions of basic measurement procedures, practical measurement examples are shown using T3LCR Series.

9.1 Basic Measurement Procedure

The following flow chart shows the basic procedures used to measure the impedance of capacitors, inductors, resistors, and other components. Follow the procedures to perform impedance measurements while referring to the items noted to the right side of each step.

Figure 9-1 Basic Measurement Procedure

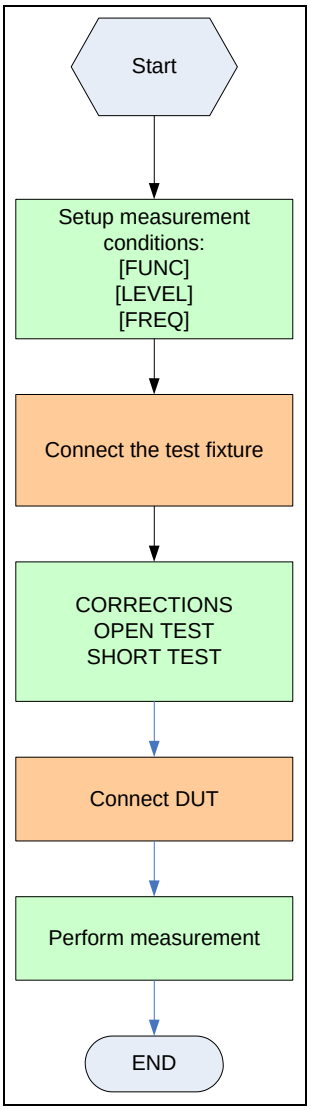

9.2 Example

This paragraph describes a practical example of measuring a ceramic capacitor.

The basic procedure flow to perform this measurement is the same as the Basic Measurement Procedure described previously. In this example, a ceramic capacitor is measured under the following conditions.

Sample (DUT) Ceramic capacitor Measurement Conditions:

- Function: Cs-D
- Test Frequency: 1 kHz
- Test Signal Level: 1V

Step 1. Turn the T3LCR Series ON.

Step 2. Set up the measurement conditions by filling in the fields on the MEAS DISPLAY page.

- Move to the FUNC field using the cursor keys and choose Cs-D.
- Move to the FREQ field using the cursor keys and input 1 kHz.
- Move to the LEVEL field using the cursor keys and input 1 V

Step 3. Connect the test fixture to the T3LCR Series.

Step 4. To compensate for the test fixture, a user correction is required.
Don't connect any DUT to the unit, as shown below:

1. Press the [Measure] key and the [OPEN SHORT] soft-key.
2. Move to the OPEN TEST or SPOT field using the cursor keys.
3. Don't connect the clips to anything, as shown here:



4. Press the [MEAS OPEN] soft-key and then the [OK] soft-key. Wait until the "Correction finished" message is displayed.
5. Press the [ON] soft-key if the OPEN field is set to OFF.
6. Move to the SHORT TEST or SPOT

field using the cursor keys.

7. Connect the clips to a shorting bar as shown below:

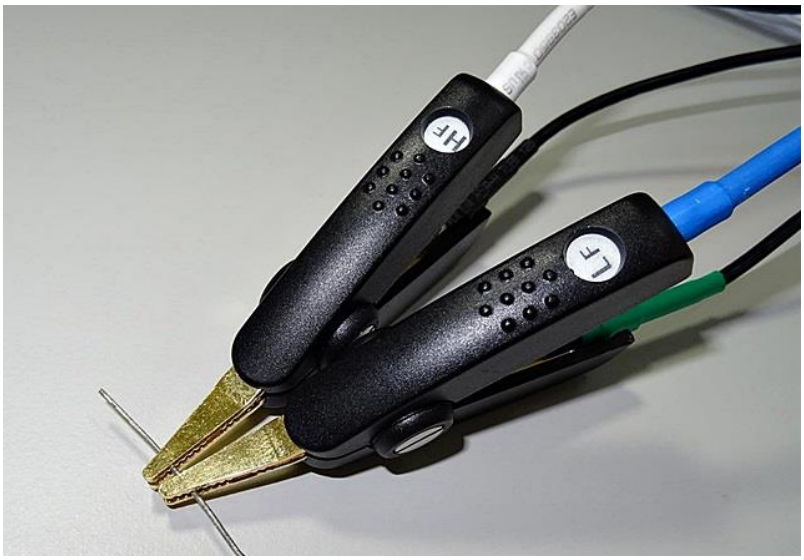

8. Press the [MEAS SHORT] soft-key and then the [OK] soft-key. Wait until the "Correction finished" message is displayed.
9. Press the [ON] soft-key if the SHORT field is set to OFF.

Step 5. Connect the DUT to the test fixture as shown below:

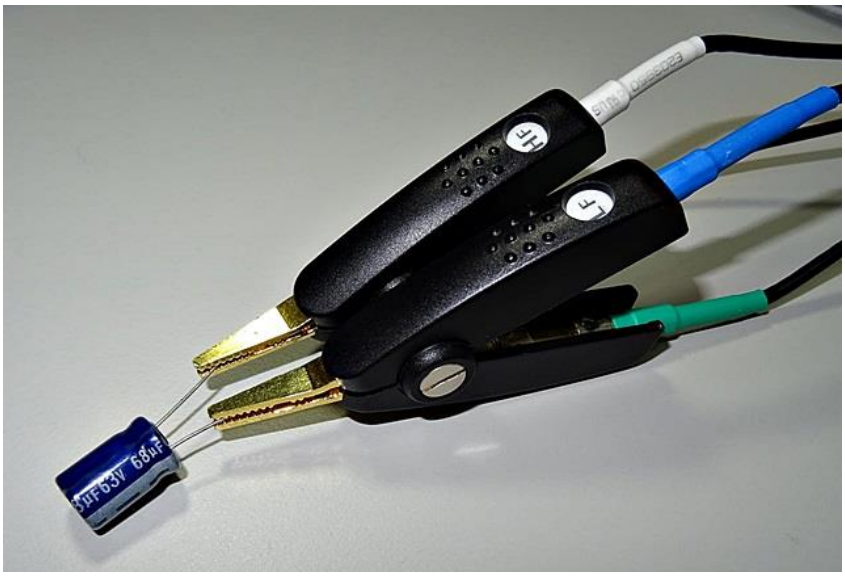

Step 6. Press the [Measure] key. Measurements are performed continuously by the internal trigger, and the measured Cs and D values of

the capacitors are displayed as shown below:

Figure 9-2 Measurement results

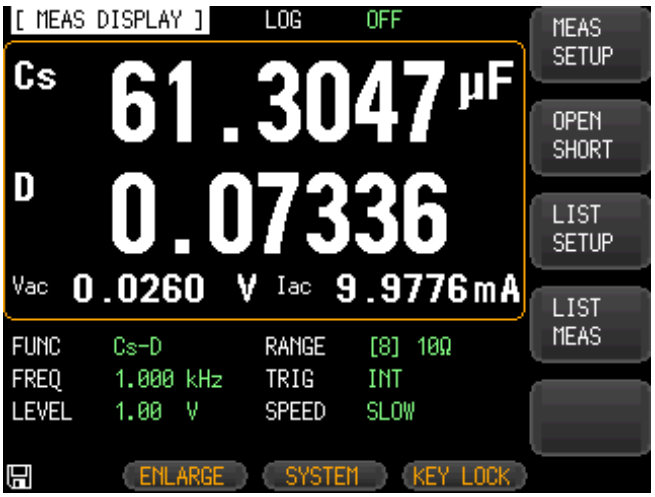

10. REMOTE CONTROL

This chapter provides the following information to remotely control the T3LCR Series via the RS-232 or USB:

- RS-232 Interface
- USB Interface
- Install USB Driver

The device uses the RS-232 interface or USB interface to communicate with the computer to complete all device's functions. With standard SCPI commands, users can easily create various acquisition system which are suitable for themselves.

10.1 RS-232 Interface

You can connect a controller (i.e. PC and PLC) to the RS-232 interface using a TELEDYNE RS-232 DB-9 cable. The serial port uses the transmit (TXD), receive (RXD) and signal ground (GND) lines of the RS-232 standard. It does not use the hardware handshaking lines CTS and RTS.



NOTE:

Only use a TELEDYNE (null modem) DB-9 cable.

Cable length should not exceed 2m.

To avoid electrical shock, turn off the power when plugging and unplugging the DB-9 cable.

Figure 10-1 The RS-232 connector on the real panel

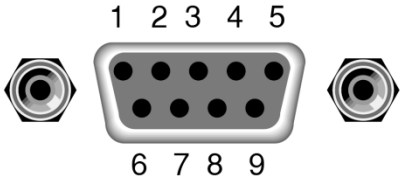

Pin 2: RxD
Pin 3: TxD
Pin 5: GND
Pin 1, 4, 6-9: No Connection

Figure 10-2 PC to T3LCR Series connection uses a null modem connection

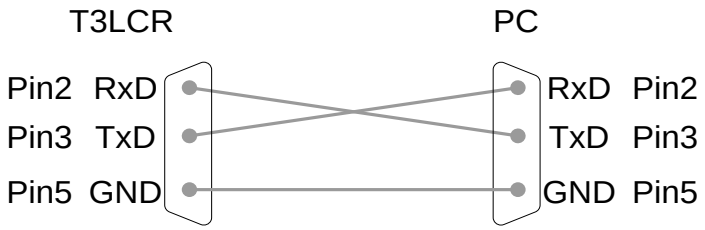

- Make sure the controller you connect to T3LCR Series also uses these settings. The RS-232 interface transfers data using:

  Data bits: 8 bits

  Stop bits: 1 bit

  Parity: none

  Baud rate: 1200-115200bps

10.2 USB Interface

You can connect a controller (i.e. PC and PLC) to the USB interface using a type A-B USB cable.

This virtual port can perform the same functions as RS232 and use the same settings as the RS232 port. It supports USB2.0 and below version.

The USB device port on the rear panel is used for remote control. The USB port is configured as CDC interface.

When configured to CDC, the USB port on the T3LCR series will appear as a virtual COM port to a connected PC. Any terminal program that can communicate via a serial port can be used for remote control. Before the T3LCR series can be used for remote control using the

CDC USB class, install the appropriate CDC USB driver.



NOTE:

Only use a type A-B USB cable.

Cable length should not exceed 2m.

To avoid electrical shock, turn off the power when plugging and unplugging the USB cable.

- Make sure the controller you connect to T3LCR Series also uses these settings. The USB interface transfers data using:

  PC connector: Type A, host
  T3LCR series connector: Rear panel Type B, slave
  Speed: 1.1/2.0 (full speed/high speed)
  USB Class: CDC (Communications device class)
  Hardware flow control: Off
  Data bits: 8-bit
  Stop bits: 1-bit
  Parity: none
  Baud rate: 1200-115200 bps

10.3 Install USB Driver

The USB driver needs to be installed when using the USB port for remote control. The USB interface creates a virtual COM port when connected to a PC.

Configure the interface to USB in SYSTEM>CONFIG>REMOTE item.

Connect the Type A-B USB cable to the rear panel USB B port on the T3LCR. Connect the other end to the Type A port on the PC.

Go to the Windows Device Manager.

For Windows 7 go to:
Start Menu > Control Panel > Hardware and Sound > Device Manager
The T3LCR will appear as an unknown LCR Meter Virtual Com Port under "Other Devices".



Right-click Other Devices and select "Update Driver Software".

Select "Browse my computer for driver software" and select the USB VCP Drivers.

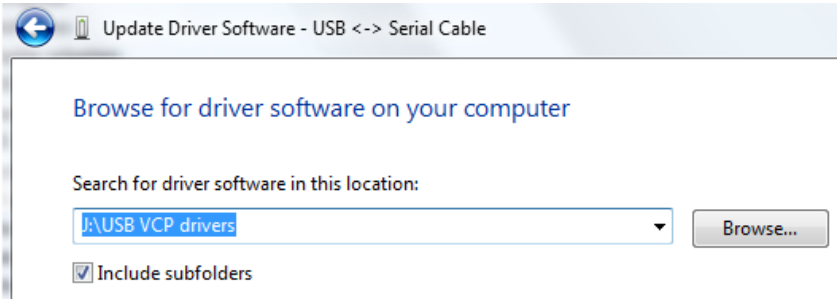

The T3LCR and the converter that it is assigned to will now appear in under the Controller (Universal Serial Bus Controller) node.

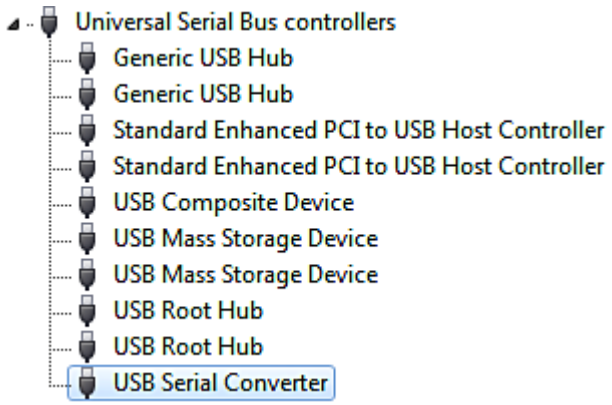

The T3LCR will appear as an unknown USB Serial Port under "Other Devices".



Right-click Other Devices and select "Update Driver Software".

Select "Browse my computer for driver software" and select the USB VCP Drivers.

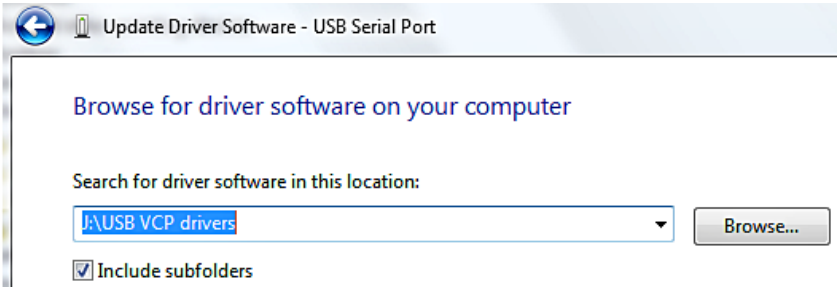

The T3LCR and the COM port that it is assigned to will now appear in under the Ports (COM & LPT) node.

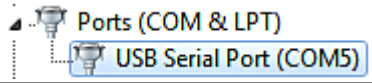

NOTE:

- To avoid electrical shock, turn off the power when plugging and unplugging the DB9 cable.
- If the driver installation is completed correctly, the number of USB serial port will be displayed.
- You need to remember this port number because you will use it when programming.

- SCPI commands can be operated through RS-232C or USB port.

11. COMMAND REFERENCE

11.1 Terminator

The EOI line is asserted by New Line or ASCII Line Feed character. (Decimal 10, Hex 0x0A, or ASCII '\n')

11.2 Notation Conventions and Definitions

The following conventions and definitions are used in this chapter to describe RS-232 operation.

< > Angular brackets enclose words or characters that are used to symbolize a program code parameter or an RS-232 command.

[ ] A square bracket indicates that the enclosed items are optional.

\n Command Terminator

11.3 Command Structure

The T3LCR commands are divided into two types: Common commands and SCPI commands.

The common commands are defined in IEEE std. 488.2-1987, and these commands are common for all devices. The SCPI commands are used to control all of the T3LCR's functions.

The SCPI commands are tree structured, three levels deep. The highest level commands are called the subsystem commands in this manual. So the lower level commands are legal only when the subsystem commands have been selected.

A colon (:) is used to separate the higher level commands and the lower level commands.

Semicolon (;) A semicolon does not change the current path but separates two commands in the same message.

Figure 11-1 Command Tree Example

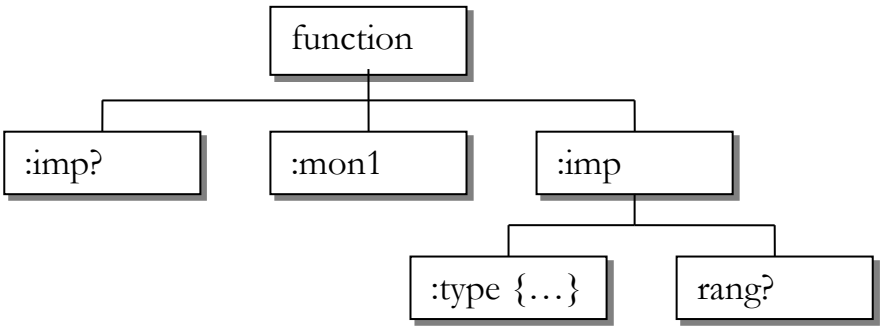

Example: function:imp:type Cp-D

function Subsystem Command

imp Level 2

type Level 3

Cp-D Parameter

The basic rules of the command tree are as follows.

- Letter case (upper and lower) is ignored.
  For example,
  FUNCTION: IMPEDANCE=
  function:impedance
- Spaces (_ used to indicate a space) must not be placed before and/or after the colon (:).
  For example,
  ☒ func_:_imp → ☑ func:imp
- The command can be completely spelled out or in abbreviated form. (The rules for command abbreviation are described later in this section)
  For example,
  function: impedance=func:imp
- The command header should be followed by a question mark (?) to generate a query for that command.
  For example,
  function:imp?
- Command abbreviations:

- Every command and character parameter has at least two forms, a short form and a long form. In some cases they will be the same. The short form is obtained using the following rules.
  A) If the long form has four characters or less, the long form and short form are the same.
  B) If the long form has more than 4 characters:
  (a) If the 4th character is a vowel, the short form is the first 3 characters of the long form.
  For example:

comparator	abbreviated to comp
current	abbreviated to curr
range	abbreviated to rang

  (b) If the 4th character is not a vowel, the short form is the first 4 characters.
  For example:

resistance	abbreviated to res
volume	abbreviated to vol

- If the long form mnemonic is defined as a phrase rather than a single word, then the long form mnemonic is the first character of the first word(s) followed by the entire last word. The above rules, when the long form mnemonic is a single word, are then applied to the resulting long form mnemonic to obtain the short form.
  For example:
  PercentTolerance abbreviated to ptol

11.4 Header and Parameters

The commands consist of a command header and parameters. (See the following.)

Example: comp:nom 100.0e3

Header Parameter

Headers can be of the long form or the short form. The long form allows easier understanding of the program code and the short form allows more efficient use of the computer.

Parameters may be of two types as follows.
(A) Character Data and String Data Character data consists of ASCII characters. The abbreviation rules are the same as the rules for command headers.
(B) Numeric Data

(a) **NR1** integer: For example, 1,+123,-123
(b) **NR2** fix float: For example, 1.23,+1.23,-1.23
(c) **NR3** floating point: For example, 1.23e3, 5.67e-3, 123k, 1.23M, 2.34G,

The available range for numeric data is 9.9E37. When numeric data is used as a parameter, the suffix multiplier mnemonics and suffix units (The suffix multiplier must be used with the suffix unit.) can be used for some commands as follows.

Table 11-1 Multiplier Mnemonics

Definition	Mnemonic
1E18 (EXA)	EX
1E15 (PETA)	PE
1E12 (TERA)	T
1E9 (GIGA)	G
1E6 (MEGA)	MA
1E3 (KILO)	K
1E-3 (MILLI)	M
1E-6 (MICRO)	U
1E-9 (NANO)	N
1E-12 (PICO)	P
1E-15 (PEMTO)	F
1E-18 (ATTO)	A

11.5 Command Reference

All commands in this reference are fully explained and listed in the following functional command order.

- DISPlay Subsystem
- FUNCtion Subsystem
- FREQuency Subsystem
- VOLTage Subsystem
- APERture Subsystem
- FETCh Subsystem
- COMParator Subsystem
- LIST Subsystem
- CORRection Subsystem
- TRIGger Subsystem
- BIAS Subsystem
- FILE Subsystem
- ERRor Subsystem
- Common Command:
- *TRG
- *IDN?
- *SAV
- *RCL

The explanation of each subsystem command is patterned as follows.

1. Subsystem command name
2. Command Tree (Subsystem command only)
3. Compound Command Name
4. Command Description
5. Command Syntax
6. Example Using the Above Command Syntax
7. Query Syntax
8. Query Response
9. Example Using the Above Query Syntax
10. Constraints

11.6 DISPlay Subsystem

The DISP Subsystem command group sets the display page.

Figure 11-2 Command Tree Example

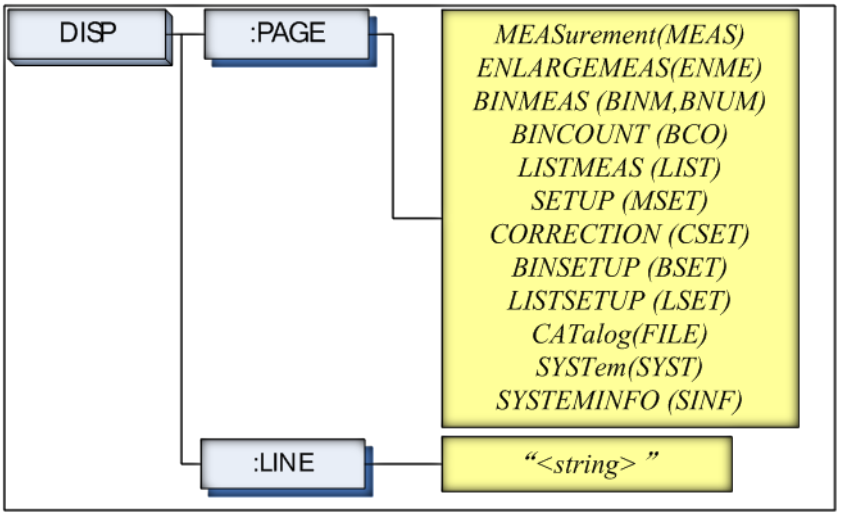

11.6.1 DISP:LINE

The :LINE command enters an arbitrary comment line of up to 30 ASCII characters in the comment field.

Command Syntax	DISP:LINE "<*string*>"
Parameter	Where, <string> is ASCII character string (30 ASCII characters)
Example	SEND> DISP:LINE "This is a comment."

11.6.2 DISP:PAGE

The :PAGE command sets the display page.

The :PAGE? Query returns the abbreviated page name currently displayed on the LCD screen.

Command Syntax	DISP:PAGE <page name>
Parameter	Where, <page name> is: MEASurement [or MEAS] Sets the display page to MEAS DISPLAY. ENLARGE[or ENLA] Sets the display page to ENLARGE DISPLAY. BINMEAS [or BINM] Sets the display page to BIN MEAS. BINCOUNT [or BCO] Sets the display page to BIN

	COUNT. LISTMEAS [or LIST] Sets the display page to LIST MEAS. SETUP [or MSET] Sets the display page to MEAS SETUP. CORRECTION [or CSET] Sets the display page to CORRECTION. BINSETUP [or BSET] Sets the display page to BIN SETUP. LISTSETUP [or LSET] Sets the display page to LIST SETUP. CATalog [or CAT] Sets the display page to CATALOG SYSTem [or SYST] Sets the display page to SYSTEM CONFIG. SYSTEMINFO [or SINF] Sets the display page to SYSTEM INFORMATION.
Example	SEND> DISP:PAGE SYST<NL>//Set to the SYSEMT CONFIG.
Query Syntax	DISP:PAGE?
Query Response	<page name><NL>
Example	SEND> DISP:PAGE?<NL> RET> SYST<NL>
Note	DISP:PAGE The command needs to be executed separately because of the long execution time to avoid the instrument ignoring the subsequent commands. SEND> DISP:PAGE MEAS;FREQ 10k<NL> //Setting is wrong SEND> DISP:PAGE MEAS<NL>//Setting is correct FREQ 10k <NL>

11.7 FUNCtion Subsystem

The FUNCtion subsystem command group sets the measurement function, the measurement range, monitors parameter control.

Figure 11-3 FUNCtion Subsystem Tree

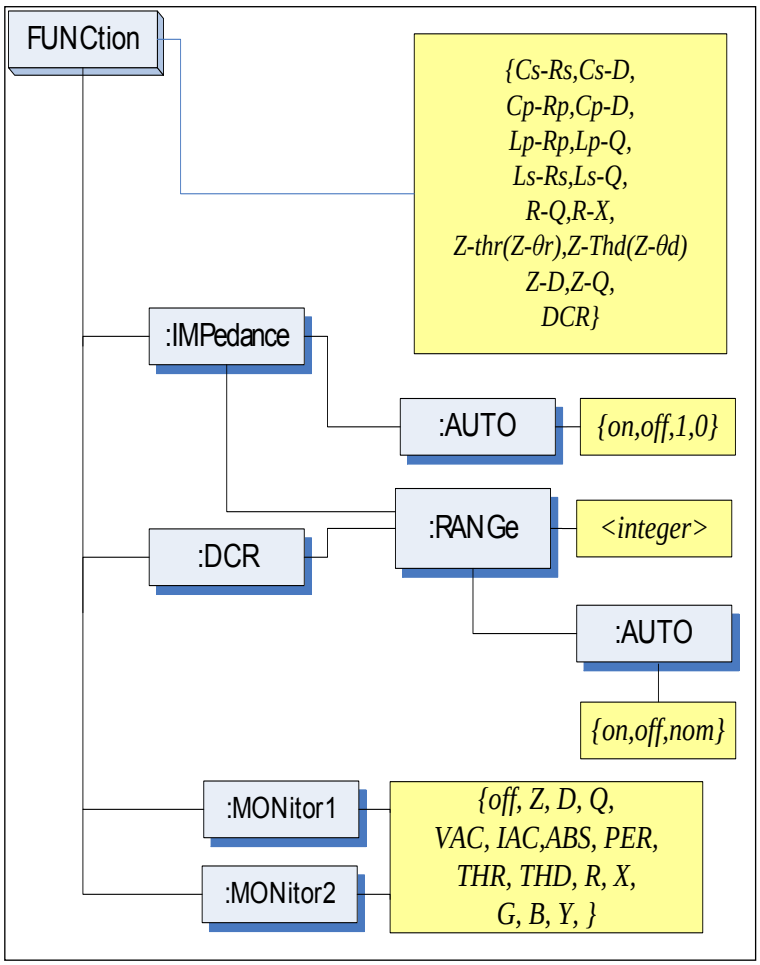

11.7.1 FUNCtion

The FUNCtion command sets the measurement function.

Command Syntax	FUNC <function>
Parameter	Where, <function> is: Cs-Rs, Cs-D, Cp-Rp, Cp-D, Lp-Rp, Lp-Q, Ls-Rs, Ls-Q, Rs-Q, Rp-Q, R-X, DCR, Z-θr (or Z-thr)*1, Z-θd (Z-thd) *1, Z-D, Z--Q. (*1: θ is ASCII Hex 0xE9)
Example	SEND> FUNC Cp-D<NL>//Set measurement. function to Cp-D
Query Syntax	FUNC?

Query Response	<function>
Example	SEND> FUNC?<NL> RET> Cp-D<NL>

11.7.2 FUNCtion:IMPedance:AUTO

The FUNCtion:IMPedance:AUTO command sets the impedance's LCZ Automatic selection.

Command Syntax	FUNC:IMPedance:AUTO {ON,OFF, 0,1}
Example	SEND> FUNC:IMP:AUTO ON<NL>
Query Syntax	FUNC:IMPedance:AUTO?
Query Response	{on,off}<NL>
Example	SEND> FUNC:IMP:AUTO?<NL> RET> off<NL>

11.7.3 FUNCtion:IMPedance:RANGe

The FUNCtion:IMPedance:RANGe command sets the impedance's measurement range.

Command Syntax	FUNC:IMPedance:RANGe <0-8,MIN,MAX>
Parameter	Where, <0-8,MIN, MAX> is: 0-8 The range number MIN =Range 0 MAX =Range 8
Example	SEND> FUNC:IMP:RANG 2<NL>//Set measurement range to [2] 10kΩ.
Query Syntax	FUNC:IMPedance:RANGe?
Query Response	<0-8><NL>
Example	SEND> FUNC:IMP:RANG?<NL> RET> 0<NL>

11.7.4 FUNCtion:DCR:RANGe

The FUNCtion:DCR:RANGe command sets the DCR's measurement range.

Command Syntax	FUNC:DCR:RANGe <0-8,MIN,MAX>
Parameter	Where, <0-8,MIN, MAX> is: 0-8 The range number MIN =Range 0 MAX =Range 8
Example	SEND> FUNC:DCR:RANG 2<NL>//Set DCR range to [2] 10kΩ.
Query Syntax	FUNC:DCR:RANGe?

Query Response	<0-8><NL>
Example	SEND> FUNC:DCR:RANG?<NL> RET> 0<NL>

11.7.5 FUNCtion:RANGe:AUTO

The FUNCtion:RANGe:AUTO command sets the auto range to ON or OFF.

Command Syntax	FUNC:RANGe:AUTO {off(hold),on(auto),NOMinal}
Parameter	Where, {off(hold),on(auto),NOMinal} is: off(or hold): Sets the auto range to off. on(or auto): Sets the auto range to on. NOMinal: Sets the range No.
Example	SEND> FUNC:RANG:AUTO AUTO<NL> //Sets to auto range. SEND> FUNC:RANG:AUTO off<NL> //Sets auto range to off.
Query Syntax	FUNC:RANGe:AUTO?
Query Response	{HOLD,AUTO,NOM}
Example	SEND> FUNC:RANG:AUTO?<NL> RET> auto<NL>

11.7.6 FUNCtion:MONitor 1 /2

The FUNCtion:MONitor1 and FUNCtion:MONitor2 commands set the two monitor parameter.

Command Syntax	FUNC:MONitor1 {off, Z, D, Q, THR, THD, R, X, G, B, Y, ABS, PER VAC, IAC} FUNC:MONitor2 {off, Z, D, Q, THR, THD, R, X, G, B, Y, ABS, PER VAC, IAC}
Parameter	Where, {off, Z, D, Q, THR, THD, R, X, G, B, Y, ABS, PER VAC, IAC}
Example	SEND> FUNC:MON1 Z<NL>
Query Syntax	FUNC:MON1? FUNC:MON2?
Query Response	{off, Z, D, Q, THR, THD, R, X, G, B, Y, ABS, PER VAC, IAC}
Example	SEND> FUNC:MON1?<NL> RET> off<NL>

FREQuency Subsystem

The FREQuency command sets the oscillator frequency. The FREQuency? query returns the current test frequency setting.

Figure 11-4 FREQ Subsystem Command Tree

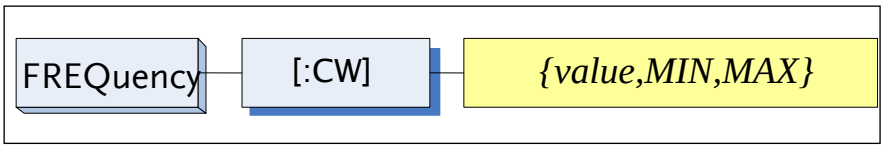

Command Syntax	FREQ[:CW] {<value>,MIN,MAX}
Parameter	Where, <value> Is the numeric data (NR1 integer, NR2fix float or NR3 floating point). MIN Sets to the minimum value MAX Sets to the maximum value
Example	SEND> FREQ 1K<NL>//Set to 1kHz,the Hz cannot be added.
Query Syntax	FREQ[:CW]?
Query Response	<NR3><NL> NR3 floating point
Example	SEND> FREQ?<NL> RET> 1.000000E+03<NL>
Note	A suffix multiplier (k) can be used with this command. But the suffix unit Hz can't be used. This command CANNOT be used in LIST SWEEP DISPLAY page and CORRECTION page.

11.8 LEVel Subsystem

The Level subsystem sets the oscillator's output voltage/current level and source output impedance.

Figure 11-5 LEVel Subsystem Command Tree

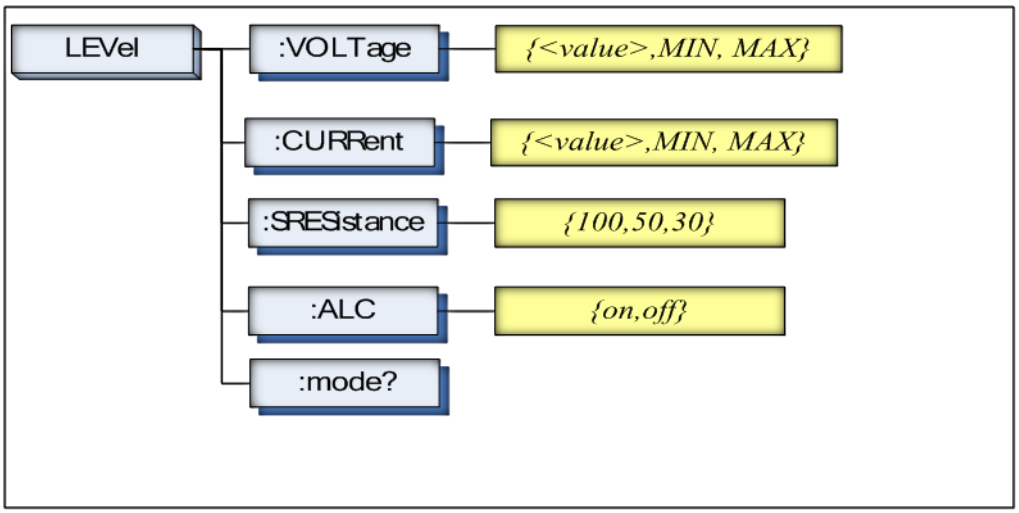

11.8.1 LEVel:VOLTage (=VOLTage[:LEVel])

The LEVel:VOLTage or VOLTage[:LEVel] command sets the oscillator's output voltage level.

Command Syntax	LEVel:VOLTage {<value>,MIN,MAX} or VOLTage:LEVel {<value>,MIN,MAX}
Parameter	Where, <value> Is the numeric data (NR1, NR2 or NR3). MIN Sets to the minimum value of voltage. MAX Sets to the maximum value of voltage.
Example	SEND> LEV:VOLT 0.3<NL>//Set to 0.3V, V unit suffix cannot be used.
Query Syntax	LEVel:VOLTage? or VOLTage:LEVel?
Query Response	<NR3> NR3 floating point
Example	SEND> VOLT?<NL> RET> 1.000e+00<NL>
Note	The V unit suffix can't be used. This command CANNOT be used in LIST MEAS page and CORRECTION page.

11.8.2 LEVel:CURRent (=CURRent[:LEVel])

The LEVel:CURRent or CURRent[:LEVel] command sets the oscillator's output current level.

Command Syntax	LEVel:CURRent {<value>,MIN,MAX} or CURRent:LEVel {<value>,MIN,MAX}
Parameter	Where, <value> Is the numeric data (NR1, NR2 or NR3). MIN Sets to the minimum value of current. MAX Sets to the maximum value of current.
Example	SEND> LEV:CURR 1m<NL>//Set to 1mA. The A unit suffix cannot be used.
Query Syntax	LEVel:CURRent? or CURRent:LEVel?
Query Response	<NR3> NR3 floating point
Example	SEND> CURR?<NL> RET> 1.000e+00<NL>
Note	The A unit suffix cannot be used. This command CANNOT be used in LIST MEAS page and CORRECTION page.

11.8.3 LEVel:SRESistance (= VOLTage:SRESistance)

The LEVel:SRESistance or VOLTage:SRESistance command sets the source output impedance.

Command Syntax	LEVel:SRESistance {30,50,100} VOLTage:SRESistance {30,50,100}
Parameter	{30,50,100} Where, 30 Sets the output impedance to 30Ω 50 Sets the output impedance to 50Ω 100 Sets the output impedance to 100Ω
Example	SEND> LEV:SRES 30<NL>//Set to 30Ω, the unit Ω cannot be added.
Query Syntax	VOLTage:SRES? or LEVel:SRES?
Query Response	<NR1> NR1 integer
Example	SEND> LEV:SRES?<NL> RET> 30<NL>

Note	The suffix unit Ω can't be used with this command. This command CANNOT be used in LIST SWEEP. DISPLAY page and CORRECTION page.

11.8.4 LEVel:ALC (=AMPlitude:ALC)

The LEVel:ALC or AMPlitude:ALC command enables the Automatic Level Control (ALC).

Command Syntax	LEVel:ALC {on,1,off,0} AMPlitude:ALC {on,1,off,0}
Parameter	{on,1,off,0} Where, on (1) Enable ALC off(0) Turn off the ALC.
Example	SEND> LEV:ALC on<NL>
Query Syntax	LEV:ALC? or AMP:ALC?
Query Response	{on,off}
Example	SEND> LEV:ALC?<NL> RET> off<NL>
Note	This command CANNOT be used in LIST MEAS page , CORRECTION page and DCR mode.

11.8.5 LEVel:MODe?

The LEVel:MODe? query returns the level mode.

Query Syntax	LEVel:MODe?
Query Response	{volt, curr}
Example	SEND> LEVel:MODe?<NL> RET> volt

11.9 APERture Subsystem

The APERture subsystem command sets the integration time of the ADC and the averaging rate.

Figure 11-6 APERture Subsystem Command Tree

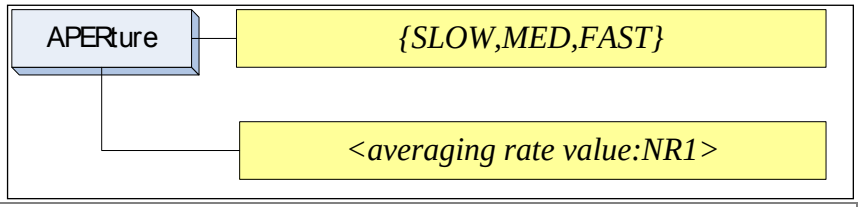

Command Syntax	APERture {SLOW,MED,FAST} APERture <value> SPEED(spd) {SLOW,MED,FAST} SPEED(spd) <value>
Parameter	Where, SLOW Set test speed to slow MED Set test speed to medium FAST Set test speed to fast <value> NR1(0 to 256): Averaging rate (0=OFF=1)
Example	SEND> APER FAST<NL> SEND> APER 10<NL>
Query Syntax	APER?
Query Response	{SLOW,MED,FAST},<avg value>
Example	SEND> APER?<NL> RET> slow,0<NL>

11.9.1 APERture:RATE?

The APERture:RATE? query returns the current integration time.

Query Syntax	APER:RATE?
Query Response	SLOW
Example	SEND> APER:RATE?<NL> RET> slow<NL>

11.9.2 APERture:AVG?

The APERture:AVG? query returns the averaging rate settings.

Query Syntax	APER:AVG?
Query Response	<NR1> Integer (0 to 256)
Example	SEND> APER:AVG?<NL> RET> 0<NL>

11.10 FETCh Subsystem

The FETCh subsystem command group is a sensor-only command which retrieves the measurement data taken by measurement(s) initiated by a trigger, and places the data into the output buffer.

Figure 11-7 FETCh Subsystem Command Tree

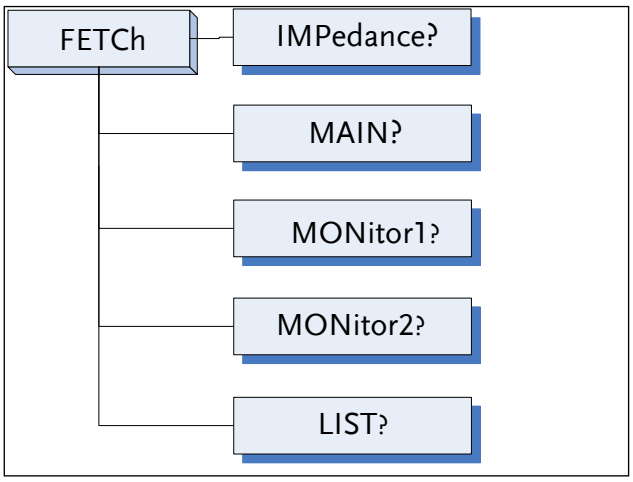

11.10.1 FETCh?

The FETCh? query sets the latest measurement data of the primary, secondary parameters and comparator result into the output buffer.

Query Syntax	FETCh?
Query Response	<NR3:primary value>,<NR3:secondary value>,<comparator result>
Example	SEND> FETC?<NL> RET> +2.61788e-11,+5.45442e-01,BIN1,AUX-OK,OK <NL> RET> +1.23434e+05,OUT ,NG <NL>//DCR & Comp on.

When in the [LIST MEAS] page view, the following description for the FETCh query is applicable:

The FETCh? query sets the latest LIST measurement data of the primary parameters, secondary parameters and comparator results into the output buffer.

Query Syntax	FETCh?
Query Response	<NR3:primary value>,<NR3:secondary value>, <CMP result>
Example	SEND> FETC?<NL> RET> -2.98524e-12,+3.27673e+00,L <NL> RET> -1.00000e+20,-1.00000e+20,- <NL>//The STEP is OFF

11.10.2 FETCh:IMPedance?

The FETCh:IMPedance? query sets the latest measurement data of the primary parameter, secondary parameter, monitor1 and monitor2 results into the output buffer.

Query Syntax	FETCh:IMPedance?
Query Response	<NR3:primary value>,<NR3:secondary value>, <NR3:monitor1>,<NR3:monitor2>,<comparator result>
Example	SEND> FETC:IMP?<NL> RET> +2.61788e-11,+5.45442e-01,+3.88651e+05, +0.00000e+00,BIN1,AUX-OK, OK<NL> RET> +1.23434e+05,BIN1,OK<NL>//DCR & Comp on.

11.10.3 FETCh:MAIN?

The FETCh:MAIN? query sets the latest measurement data of the primary and secondary parameters.

Query Syntax	FETCh:MAIN?
Query Response	<NR3:primary value>,<NR3:secondary value>
Example	SEND> FETC:MAIN?<NL> RET> +2.02100e-11,+1.64422e-01<NL>//LCR Primary,Secondary RET> +1.23434e+05<NL>//DCR

11.10.4 FETCh:MONitor1? /2?

The FETCh:MONitor1? and FETCh:MONitor2 set the latest measurement data of the moniter1 and moniter2 parameters into the output buffer.

Query Syntax	FETCh:MONitor1? and FETCh:MONitor2?
Query Response	<NR3: moniter1/2 value>
Example	SEND> FETC:MON1?<NL> RET> +3.88651e+05<NL> RET> +0.00000e+00<NL>//0: The monitor 1 is OFF

11.10.5 FETCh:MONitor?

The FETCh:MONitor? sets the latest measurement data of the moniter1 and moniter2 parameters into the output buffer.

Query Syntax	FETCh:MONitor?
Query Response	<NR3: moniter1/2 value>
Example	SEND> FETC:MON?<NL> RET> +3.88651e+05,+0.00000e+00<NL> (0: The monitor 2 is OFF)

11.10.6 FETCh:LIST?

The FETCh:LIST? query sets the latest LIST measurement data of the primary parameters, secondary parameters and comparator results into the output buffer. Only applicable when in the [LIST MEAS] page view.

Query Syntax	FETCh:LIST?
Query Response	<spot no>,<NR3:primary value>,<NR3:secondary value>,<CMP result> // spot no:01-10
Example	SEND> FETC:LIST?<NL> RET> 01,-2.98524e-12,+3.27673e+00,L,02,+7.11030e-12,+3.48450e-01,P,03,+7.11322e-12,+5.14944e-02,H,04,-1.00000e+20,-1.00000e+20,-,05,-1.00000e+20,-1.00000e+20,-,06,-1.00000e+20,-1.00000e+20,-,07,-1.00000e+20,-1.00000e+20,-,08,-1.00000e+20,-1.00000e+20,-,09,-1.00000e+20,-1.00000e+20,-,10,-1.00000e+20,-1.00000e+20,-<NL> (-1.00000e+20: The STEP is OFF)
Query Syntax	FETCh:LIST? <spot no>
Query Response	<spot no>,<NR3:primary value>,<NR3:secondary value>,<CMP result>
Example	SEND> FETC:LIST? 2<NL> RET> 02,+7.11030e-12,+3.48450e-01,P<NL> (-1.00000e+20: The STEP is OFF)

11.11 COMParator Subsystem

The COMParator subsystem command group sets the comparator function, including its ON/OFF setting, limit mode, and limit values.

Figure 11-8 COMParator Subsystem Command Tree

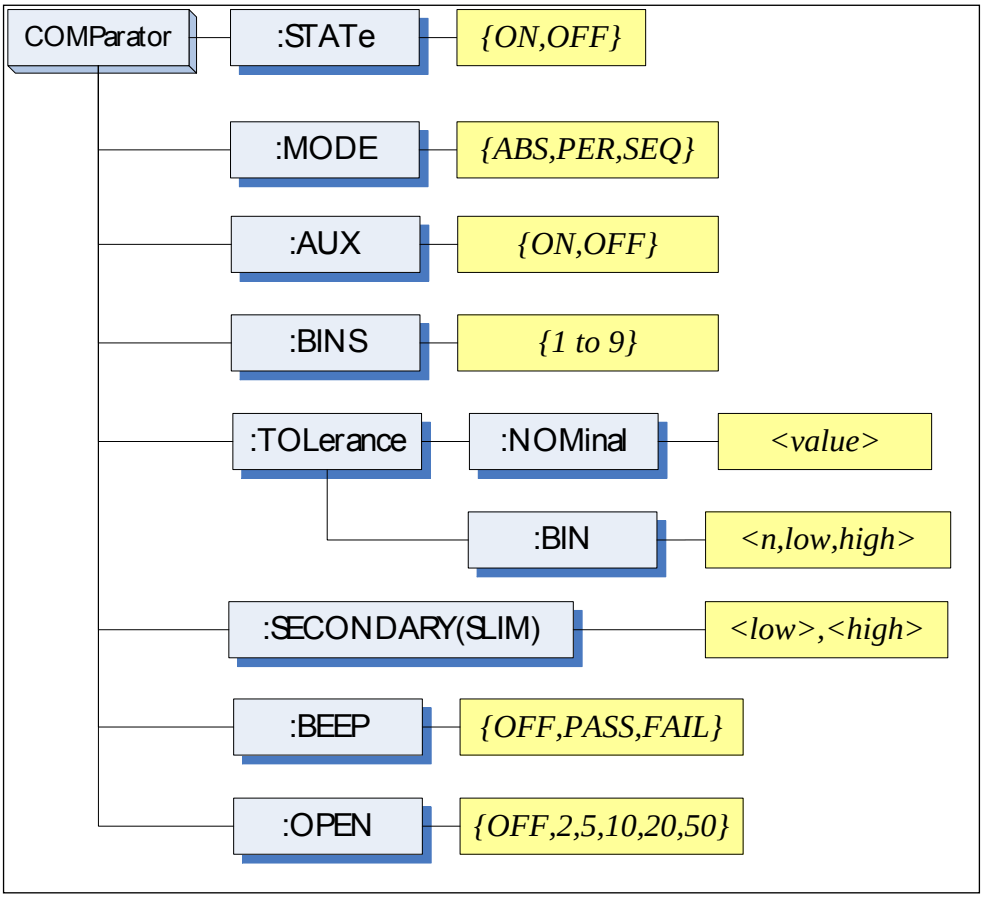

11.11.1 COMParator:STATe

The COMParator:STATe command sets the comparator function to ON or OFF.

Command Syntax	COMParator:STATe {ON,OFF,1,0}
Parameter	Where, ON or 1 Sets the comparator to ON OFF or 0 Sets the comparator to OFF
Example	SEND> COMP:STAT OFF<NL>
Query Syntax	COMParator:STATe?
Query Response	{on,off}
Example	SEND> COMP:STAT?<NL> RET> on<NL>

11.11.2 COMParator:MODE

The :COMParator:MODE command sets the limit mode of the comparator function.

Command Syntax	COMParator:MODE {ABS,PER,SEQ}
Parameter	Where,{ABS,PER,SEQ} is: ABS Absolute tolerance mode PER Percent tolerance mode SEQ Sequential mode
Example	SEND> COMP:MODE PER<NL>
Query Syntax	COMParator:MODE?
Query Response	{abs,per,seq}
Example	SEND> COMP:MODE?<NL> RET> abs<NL>

11.11.3 COMParator:AUX

The COMParator:AUX command sets the auxiliary BIN counting function of the comparator to ON or OFF.

Command Syntax	COMParator:AUX {ON,OFF,1,0}
Parameter	Where,{ON,OFF,1,0} is: ON or 1 Set the AUX BIN to ON OFF or 0 Set the AUX BIN to OFF
Example	SEND> COMP:AUX OFF<NL>
Query Syntax	COMParator:AUX?
Query Response	{on,off}
Example	SEND> COMP:AUX?<NL> RET> on<NL>

11.11.4 COMParator:BINS

The COMParator:BINS command sets the total number of bins.

Command Syntax	COMParator:BINS <value>
Parameter	Where,{value} is: NR1 (1 to 9)
Example	SEND> COMP:BINS 3<NL>
Query Syntax	COMParator:BINS?
Query Response	<NR1> (1 to 9)
Example	SEND> COMP:BINS?<NL> RET> 3<NL>

11.11.5 COMParator:TOLerance:NOMinal

The COMParator:TOLerance:NOMinal command sets the nominal value for the tolerance mode of the comparator function.

Command Syntax	COMParator:TOLerance:NOMinal <value>
Parameter	Where,<value> is: NR1, NR2 or NR3 A suffix multiplier can be used with this command. But the suffix unit F/Ω/H can't be used.
Example	SEND> COMP:TOL:NOM 100N<NL> SEND> COMP:TOL:NOM 1E-6<NL>
Query Syntax	COMParator:TOLerance:NOMinal?
Query Response	<NR3>
Example	SEND> COMP:TOL:NOM?<NL> RET> 1.00000e-06<NL>

11.11.6 COMParator:TOLerance:BIN

The COMParator:TOLerance:BIN command sets the low/high limit values of each BIN for the comparator function tolerance mode.

Command Syntax	COMParator:TOLerance:BIN <n>,<low limit>,<high limit>
Parameter	Where,<n>,<low limit>,<high limit> is: n NR1 (1 to 9): Bin number low limit NR1,NR2 or NR3: low limit value high limit NR1,NR2 or NR3: high limit value
Example	SEND> COMP:TOL:BIN 1,100P,200P<NL> SEND> COMP:TOL:BIN 2,200E-6,300E-6<NL>
Query Syntax	COMParator:TOLerance:BIN? <n>
Parameter	Where,<n> is: NR1 (1 to 9): Bin number
Query Response	<NR3:low limit>,<NR3:high limit>
Example	SEND> COMP:TOL:BIN? 2<NL> RET> 1.00000e-06,2.00000E-6<NL>

11.11.7 COMParator:SLIM

The COMParator:SLIM or COMParator:secondary command sets the LOW/HIGH limit values for the secondary parameter.

Command Syntax	COMParator:SLIM <low value>,<high value> COMParator:secondary <low value>,<high value>
Parameter	Where, <low value>,<high value> is: <low value> NR1,NR2 or NR3: low limit value <high value> NR1,NR2 or NR3: high limit value

	A suffix multiplier can be used with this command.
Example	SEND> COMP:SLIM 0.0001,0.0010<NL>
Query Syntax	COMParator:SLIM? COMParator:secondary?
Query Response	<NR3:low limit>,<NR3:high limit>
Example	SEND> COMP:SLIM?<NL> RET> 1.00000e-04,1.00000e-03<NL>

11.11.8 COMParator:BEEP

The :COMParator:BEEP command sets beep mode of the comparator function.

Command Syntax	COMParator:BEEP {OFF,PASS,FAIL}
Parameter	Where, OFF Turns the beeper off. PASS Sounds a beep when the test is passed (BIN1-BIN9). FAIL Sounds a beep when the test is failed (OUT).
Example	SEND> COMP:BEEP PASS<NL>
Query Syntax	COMParator:BEEP?
Query Response	{OFF,PASS,FAIL}
Example	SEND> COMP:BEEP?<NL> RET> OFF<NL>

11.11.9 COMParator:OPEN

The :COMParator:OPEN command selects the open condition for main parameter.

Command Syntax	COMParator:OPEN {OFF,2,5,10,20,50}
Parameter	Where, OFF Turns the beeper off. 2,5,10,20,50 The percent range value
Example	SEND> COMP:OPEN 2<NL>
Query Syntax	COMParator:OPEN?
Query Response	{OFF,2,5,10,20,50}
Example	SEND> COMP:OPEN?<NL> RET> OFF<NL>

11.12 LIST Subsystem

The LIST or SWEEP Subsystem command group sets the List Sweep measurement function, including the sweep point setting and limit values for the limit function.

Figure 11-9 LIST Subsystem Command Tree

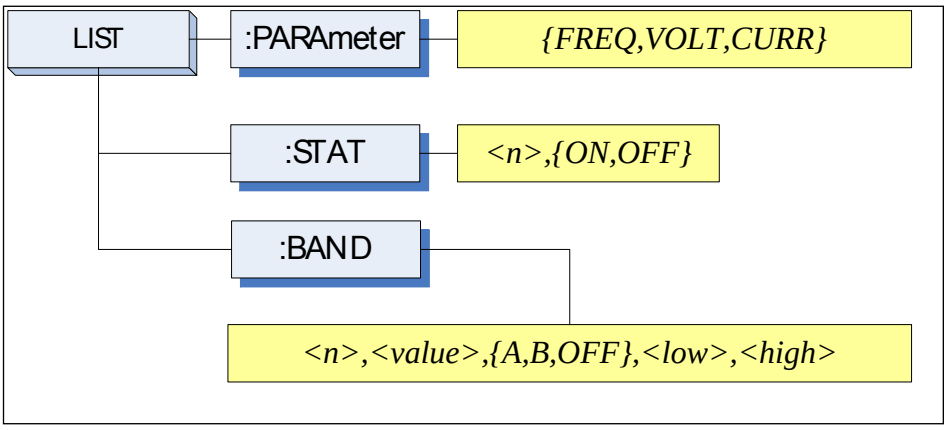

11.12.1 LIST:PARAmeter

The LIST:PARAmeter command sets the list sweep parameter.

Command Syntax	LIST:PARAmeter {FREQ,VOLT,CURR}
Parameter	Where, {FREQ,LEVEL} is: FREQ Sets the sweep parameter to frequency VOLT Sets the sweep parameter to voltage level CURR Sets the sweep parameter to current level
Example	SEND> LIST:PARA VOLT<NL>
Query Syntax	LIST:PARAmeter?
Query Response	{FREQ,VOLT,CURR}
Example	SEND> LIST:PARA?<NL> RET> FREQ<NL>

11.12.2 LIST:STAT

The LIST:STAT command turns on/off the specified sweep point.

Command Syntax	LIST:STAT <n>,{ON,OFF,1,0}
Parameter	Where,<n> is: n NR1(1 to 10): List sweep point ON or 1 Set this point to ON OFF or 0 Set this point to OFF
Example	SEND> LIST:STAT 1,ON<NL>
Query Syntax	LIST:STAT? <n>

Parameter	Where,<n> is: n NR1(1 to 10): List sweep point
Query Response	{on,off}
Example	SEND> LIST:STAT? 1<NL> RET> on<NL>

11.12.3 LIST:BAND

The LIST:BAND command sets the List Sweep point value, limit mode and low/high limit values.

Command Syntax	LIST:BAND <n>,<point value>,{A,B,OFF},<low>,<high>
Parameter	Where, <n>,<point value>,{A,B,OFF},<low>,<high> is: n NR1(1 to 10): List sweep point <point value> Sweep point value (frequency value or signal level voltage value) A Uses the primary parameter as the limit parameter. B Uses the secondary parameter as the limit parameter. OFF Turn off the List Sweep's comparator function <low> NR1,NR2 or NR3: low limit value <high> NR1,NR2 or NR3: high limit value Note: The suffix multipliers can be used with this command. But the suffix units CANNOT be added.
Example	SEND> LIST:BAND 1,1k,A,1n,2n<NL> SEND> LIST:BAND 2,10k,A,1E-9,2E-9<NL>
Query Syntax	LIST:BAND? <n>
Parameter	Where,<n> is: n NR1(1 to 10): List sweep point
Query Response	{on,off},<point value>,{A,B,-},<NR3:low>,<NR4:high>
Example	SEND> LIST:BAND? 1<NL> RET> on,1.00000e+03,A,1.000000E-9,2.000000E-9<NL>

11.13 CORRection Subsystem

The CORRection subsystem command group sets the correction function, including the OPEN, SHORT and SPOT correction settings.

Note The CORRection subsystem CANNOT work in [LIST MEAS] page.

Figure 11-10 CORRection Subsystem Command Tree

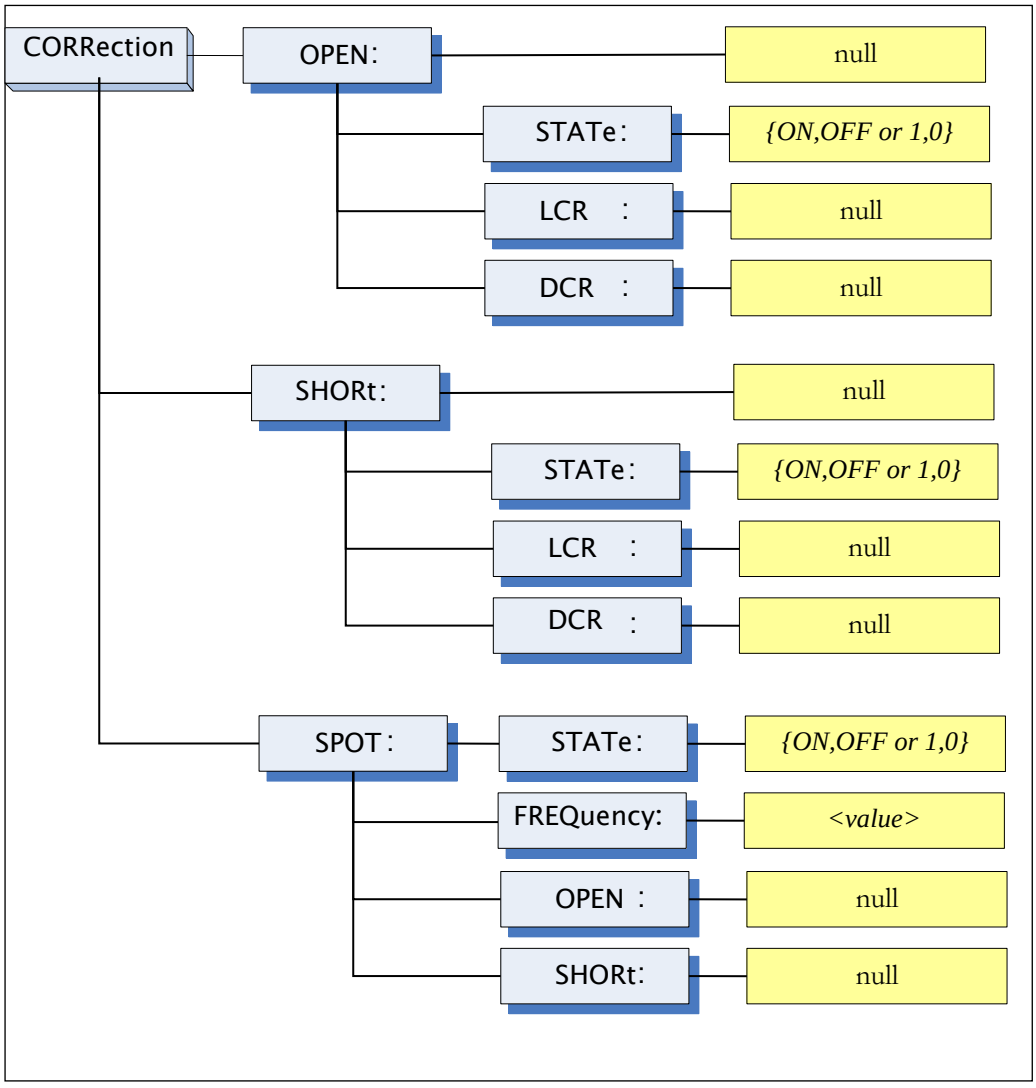

11.13.1 CORRection:OPEN

The CORRection:OPEN command execute all preset OPEN correction data measurement points.

Command Syntax	CORRection:OPEN
Example	SEND> CORRection:OPEN<NL> RET> open<NL> // Run pass/fail<NL> //Finish or Undone

11.13.2 CORRection:OPEN:STATe

The CORRection:OPEN:STATe command sets the OPEN correction function to ON or OFF.

Command Syntax	CORRection:OPEN:STATe {ON,OFF or 1,0}
Parameter	ON, 1 Set up the function is ON OFF,0 Set up the function is OFF
Example	SEND> CORR:OPEN:STATe ON<NL> RET> null
Query Syntax	CORRection:OPEN:STATe?
Query Response	{on,off}
Example	SEND> CORR:OPEN:STATe?<NL> RET> on<NL>

11.13.3 CORRection:OPEN:LCR

The CORRection:OPEN:LCR command execute all preset OPEN correction data measurement points (AC).

Command Syntax	CORRection:OPEN:LCR
Example	SEND> CORRection:OPEN:LCR<NL> RET> LCR open<NL> // Run pass/fail<NL> //Finish or Undone

11.13.4 CORRection:OPEN:DCR

The CORRection:OPEN:DCR command execute all preset OPEN correction data measurement points (DC).

Command Syntax	CORRection:OPEN:DCR
Example	SEND> CORRection:OPEN:DCR<NL> RET> DCR open<NL> // Run pass/fail<NL> //Finish or Undone

11.13.5 CORRection:SHORt

The CORRection:SHORt command execute all preset SHORT correction data measurement points.

Command Syntax	CORRection:SHORt
Example	SEND> CORRection:SHOR<NL> RET> short<NL>

11.13.6 CORRection:SHORt:STATe

The CORRection:SHORt:STATe command sets the SHORT correction function to ON or OFF.

Command Syntax	CORRection:SHORt:STATe {ON,OFF or 1,0}
Parameter	ON, 1 Set up the function is ON OFF,0 Set up the function is OFF
Example	SEND> CORR:SHOR:STATe ON<NL> RET> null
Query Syntax	CORRection:SHOR:STATe?
Query Response	{on,off}
Example	SEND> CORR:SHOR:STATe?<NL> RET> on<NL>

11.13.7 CORRection:SHORt:LCR

The CORRection:SHORt:LCR command execute all preset SHORT correction data measurement points (AC).

Command Syntax	CORRection:SHORt:LCR
Example	SEND> CORRection:SHORt:LCR<NL> RET> LCR short<NL> // Run pass/fail<NL> //Finish or Undone

11.13.8 CORRection:SHORt:DCR

The CORRection:SHORt:DCR command execute all preset SHORT correction data measurement points (DC).

Command Syntax	CORRection:SHORt:DCR
Example	SEND> CORRection:SHORt:DCR<NL> RET> DCR short<NL> // Run pass/fail<NL> //Finish or Undone

11.13.9 CORRection:SPOT:STATe

The CORRection:SPOT:STATe command sets the SOPT correction function to ON or OFF.

Command Syntax	CORRection:SOPT:STATe {ON,OFF or 1,0}
Parameter	ON, 1 Set up the function is ON OFF,0 Set up the function is OFF
Example	SEND> CORR:SPOT:STATe ON<NL> RET> null

Query Syntax	CORRection:SPOT:STATe?
Query Response	{on,off}
Example	SEND> CORR:SPOT:STATe?<NL> RET> on<NL>

11.13.10 CORRection:SPOT:FREQuency

The CORRection:SPOT:FREQuency command sets the frequency point for the specified frequency point correction.

Command Syntax	CORRection:SPOT:FREQuendy <value>
Parameter	value NR1,NR2 or NR3:Frequecny value. A suffix multiplier can be used with this command. But the unit "Hz" cannot be added.
Example	SEND> CORR:SPOT:FREQ 100<NL> SEND> CORR:SPOT:FREQ 10k<NL>
Query Syntax	CORRection:SPOT:FREQuency?
Query Response	<NR3>
Example	SEND> CORR:SPOT:FREQ?<NL> RET> 1.000000e+03<NL>

11.13.11 CORRection:SPOT:OPEN

This command executes the OPEN correction data measure for the specified frequency correction.

Command Syntax	CORRection:SPOT:OPEN
Example	SEND> CORR:SPOT:OPEN<NL> RET> pass/fail<NL> //Finish or Undone

11.13.12 CORRection:SPOT:SHORt

This command executes the SHORT correction data measure for the specified frequency correction.

Command Syntax	CORRection:SPOT:SHORt
Example	SEND> CORR:SPOT:SHOR<NL> RET> pass/fail<NL> //Finish or Undone

11.14 TRIGger Subsystem

The TRIGger subsystem command group is used to enable a measurement or a sweep measurement, and to set the trigger mode.

Figure 11-11 TRIGger Subsystem Command Tree

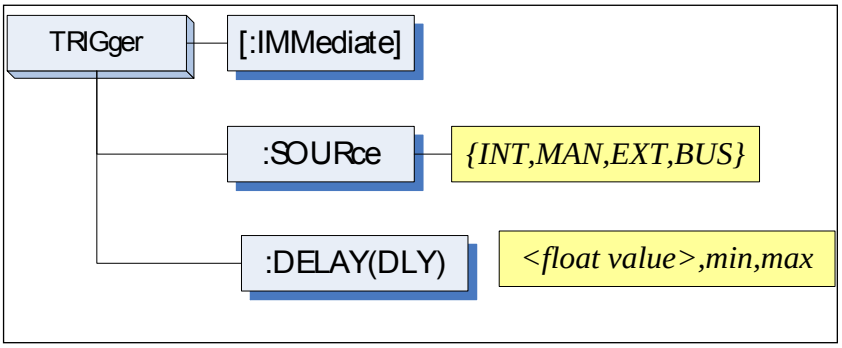

11.14.1 TRIGger[:IMMediate]

The TRIGger:IMMediate command causes the trigger to execute a measurement or a sweep measurement, regardless of the trigger state.

Command Syntax	TRIGger[:IMMediate]
Example	SEND> TRIG<NL>
Note	This command can be ONLY used in BUS trigger mode.

11.14.2 TRIGger:SOURce

The TRIGger:SOURce command sets the trigger mode.

Command Syntax	TRIGger:SOURce {INT,MAN,EXT,BUS}
Parameter	Where, {INT,MAN,EXT,BUS} is INT Internal Trigger Mode MAN Manual Trigger Mode EXT External Trigger Mode BUS BUS Trigger Mode
Example	SEND> TRIG:SOUR BUS<NL>
Query Syntax	TRIGger:SOURce?
Query Response	{INT,MAN,EXT,BUS}
Example	SEND> TRIG:SOUR?<NL> RET> INT<NL>

11.14.3 TRIGger:DELAY

The TRIGger:DELAY command sets the trigger delay time.

Command Syntax	TRIGger:DELAY {<float>,min,max} TRIGger:DLY {<float>,min,max}

Parameter	Where, is float value:from 1ms to 60.00s min: =0ms max: =60.000s
Example	SEND> TRIG:DLY 1<NL>//1.000s
Query Syntax	TRIGger:DELAY? TRIGger:DLY?
Query Response	{0.000s-60.00s}
Example	SEND> TRIG:DLY?<NL> RET> 1.000s<NL>

11.15 BIAS Subsystem

The BIAS subsystem command group sets the DC BIAS switch to ON or OFF, and sets the DC bias voltage value.

Figure 11-12 BIAS Subsystem Command Tree

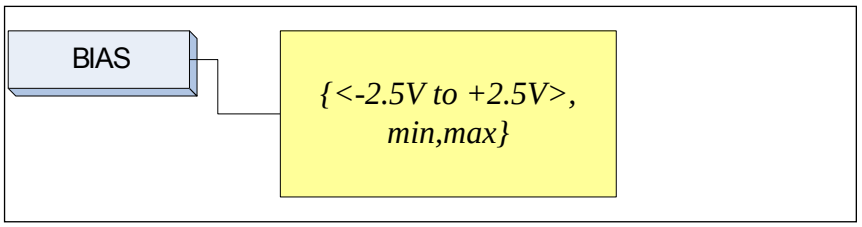

Command Syntax	BIAS {OFF,<-2.5 to +2.5V>,min,max}
Example	SEND> BIAS OFF<NL> SEND> BIAS 2<NL>
Query Syntax	BIAS?
Query Response	<-2.50V-+2.50V>
Example	SEND> BIAS?<NL> RET> OFF<NL>

11.16 FILE Subsystem

The FILE subsystem command group executes the file operation.

Figure 11-13 FILE Subsystem Command Tree

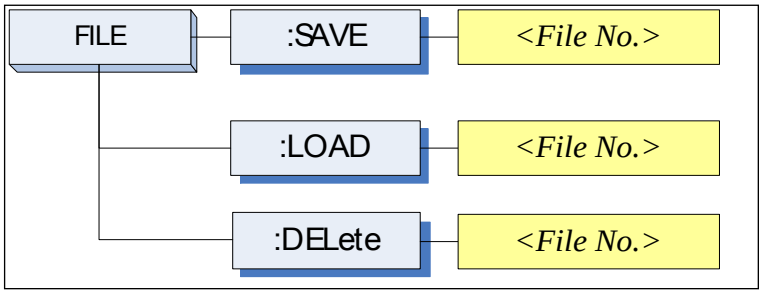

11.16.1 FILE?

The FILE? query returns the file number used by the system.

Query Syntax	FILE?
Query Response	<NR1(0 TO 9): File number>
Example	SEND> FILE?<NL> RET> 0<NL>

11.16.2 FILE:SAVE

The FILE:SAVE command saves all user settings into the currently used file.

Command Syntax	FILE:SAVE
Example	SEND> FILE:SAVE<NL>

The FILE:SAVE <n> command saves all user settings into the specified file.

Command Syntax	FILE:SAVE <File No.>
Parameter	Where, <File No.> is: NR1 (0 to 9)
Example	SEND> FILE:SAVE 0<NL>

11.16.3 FILE:LOAD

The FILE:LOAD command recalls all user settings from the currently used file.

Command Syntax	FILE:LOAD
Example	SEND> FILE:LOAD<NL>

The FILE:LOAD <n> command recalls all user settings from specified file.

Command Syntax	FILE:LOAD <File No.>
Parameter	Where, <File No.> is: NR1 (0 to 9)
Example	SEND> FILE:LOAD 0<NL>

11.16.4 FILE:DELete

Command Syntax	FILE:DELete <File No.>
Parameter	Where, <File No.> is: NR1 (0 to 9)
Example	SEND> FILE:DELete<NL>

11.17 ERRor Subsystem

11.17.1 ERRor?

The ERRor? retrieves the last error information.

Query Syntax	ERRor?
Query Response	Error string
Example	SEND> ERR?<NL> RET> no error.<NL>

11.18 SYSTEM Subsystem

11.18.1 SYSTem:SHAKehand

The SYSTem:SHAKehand command feeds back the sent commands.

Command Syntax	SYSTem:SHAKehand {on,off}
Example	SEND> SYST:SHAK ON<NL>
Query Syntax	SYSTem:SHAKehand?
Query Response	{on,off}
Example	SEND> SYST:SHAK?<NL> RET> OFF<NL>

11.18.2 SYSTem:CODE

The SYSTem:CODE command feeds back error codes for each sent command.

Command Syntax	SYSTem:CODE {on,off}
Example	SEND> SYST:CODE ON<NL>

Query Syntax	SYSTem:CODE?
Query Response	{on,off}
Example	SEND> SYST:CODE?<NL> RET> OFF<NL>

11.18.3 SYSTem:KEYLock

SYSTem:KEYLock command unlocks the keypad.

Command Syntax	SYST:KEYLOCK OFF or UNLOCK(UNLK)
Example	SEND> UNLOCK<NL>

11.18.4 SYSTem:RESult

SYSTem:RESult command selects the test results send mode.

Command Syntax	SYSTem:RESult {fetch,auto}
Example	SEND> SYST:RES fetch<NL>
Parameter	Where, fetch The test results will be sent back by command "fetch?". auto The results will be sent back by one trig.
Query Syntax	SYSTem:RESult?
Query Response	{FETCH,AUTO}
Example	SEND> SYST:RES? <NL> RET> fetch<NL>

11.19 Common Commands

11.19.1 *IDN?

The *IDN? query returns the instrument ID.

Query Syntax	IDN? Or *IDN?
Query Response	<model>,<firmware>,<serial no.>,<manufacturer>

11.19.2 *TRG

The *TRG command (trigger command) performs the same function as the Group Execute Trigger command.

Command Syntax	*TRG
Query Response	<primary value>,<secondary value>,<comparator result>
Example	SEND> *TRG RET> +5.56675e-11,+7.25470e-01,OUT

Note	This command can be used in BUS trigger mode. *TRG = TRIG;:FETC?

11.19.3 *SAV

*SAV = FILE:SAVE

The *SAV command saves all user settings into the currently used file.

Command Syntax	*SAV
Example	SEND> *SAV<NL>

11.19.4 *RCL

*RCL = FILE:LOAD

The *RCL command recalls all user settings from the currently used file.

Command Syntax	*RCL
Example	SEND> *RCL<NL>

12. SPECIFICATION

This chapter describes the specifications and supplemental performance characteristics of the T3LCR Series:

- Specifications
- Dimensions

Accuracy is defined as meeting all of the following conditions:

Temperature:	23 ºC±5 ºC
Humidity:	<70% R.H.
Zeroing:	Open and Short Correction Warm up time is 30 min or more.

1-year calibration cycle.

Basic Accuracy:	0.05%(Slow/Med), 0.1%(Fast)

12.1 General Specification

Display:	RGB color TFT-LCD, Size: 3.5" (320x240)
Test Function:	Cs-Rs, Cs-D, Cp-Rp, Cp-D, Lp-Rp, Lp-Q, Ls-Rs, Ls-Q, Rs-Q, Rp-Q, R-X, DCR, Z-θr, Z-θd, Z-D, Z-Q
Monitor Parameter:	Z, D, Q, Vac, Iac, Δ, Δ%, θr, θd, R, X, G, B, Y (2 Parameter)
Measurement Speed:	40 times/s, 10 times/s, 3 times/s
Test Frequency	T3LCR1300: 10Hz～300kHz T3LCR1100: 10Hz～100kHz T3LCR1002: 10Hz～2kHz

Frequency range and resolution

Frequency range(F)	Resolution
10.00Hz ≦ F ≦ 99.99Hz	0.01Hz
100.0Hz ≦ F ≦ 999.9Hz	0.1Hz
1.000kHz ≦ F ≦ 9.999kHz	1Hz
10.00kHz ≦ F ≦ 99.99kHz	10Hz
100.0kHz ≦F ≦ 300.0kHz	100Hz

Frequency Accuracy: ±0.01% 4 digit resolution

T3LCR1300's open/short trimming frequency point list

10	12	15	20	25	30	40	50	60	80
100	120	150	200	250	300	400	500	600	800
1k	1.2k	1.5k	2k	2.5k	3k	4k	5k	6k	8k
10k	12k	15k	20k	25k	30k	40k	50k	60k	80k
100k	120k	150k	200k	250k	300k				

T3LCR1100's open/short trimming frequency point list

10	12	15	20	25	30	40	50	60	80
100	120	150	200	250	300	400	500	600	800
1k	1.2k	1.5k	2k	2.5k	3k	4k	5k	6k	8k
10k	12k	15k	20k	25k	30k	40k	50k	60k	80k
100k									

T3LCR1002's open/short trimming frequency point list

10	12	15	20	25	30	40	50	60	80
100	120	150	200	250	300	400	500	600	800
1k	1.2k	1.5k	2k						

Display Range

Parameter	Display Range
L	0.00001uH-9999.99H
C	0.00001pF-9999.99mF
R, X, |Z|	0.00001Ω-99.9999MΩ
G, B, |Y|	0.01nS-999.999S
D	0.00001-9.99999
Q	0.00001-99999.9
θd	-179.999°-179.999°
θr	-3.14159-3.14159
DCR	0.00001Ω-99.9999MΩ
Δ%	-999999%-999999%

AC Test signal level:	10.00mV- 2.00V (±10%) CV: 10.00mV- 2.00V(±6%) 100.0uA- 20.00mA (±10%) CC: 100.0uA- 20.00mA(±6%) (@2VMax)
DCR Test signal level:	+2V, 0.066A(Max.), Output impedance fixed 30Ω
DC Bias: Internal:	±2.5V (0.5%+0.005V)
List Test:	10Step (Frequency/Voltage/Current)
Output impedance:	30Ω, 50Ω and 100Ω
Ranging:	Auto, Hold and Nominal range. Total 9 Ranges.
Equivalent Circuit:	Serial and Parallel
OPEN/SHORT Test :	OPEN/SHORT Zeroing (ALL,SPOT)
Files:	built-in 10 files and USB Disk 10 files, 9999 Log File, 999 Picture File, 10000 Data (.csv)
Beep Feature:	OFF/PASS/FAIL
Trigger Mode:	Internal, Manual, External and Bus Trigger.
Interface:	Handler interface and RS232/USB interface.

Environment:	Specification Conditions:	Temperature: 23˚C±5˚C, Relative Humidity: <70%RH
	Operating Environment:	Temperature: 0-50˚C, Relative Humidity: <70%RH (Indoor use only, Altitude: 2000 meters)
	Storage Conditions:	Temperature: -10-70˚C, Relative Humidity: <80%RH
	AC Input Power:	AC 100V-240V, 50Hz-60Hz
	Fuse:	2A Slow-Blow
	Maximum rated power:	15W
	Weight:	3kg, net

12.2 Dimensions

Figure 12-1 Dimensions

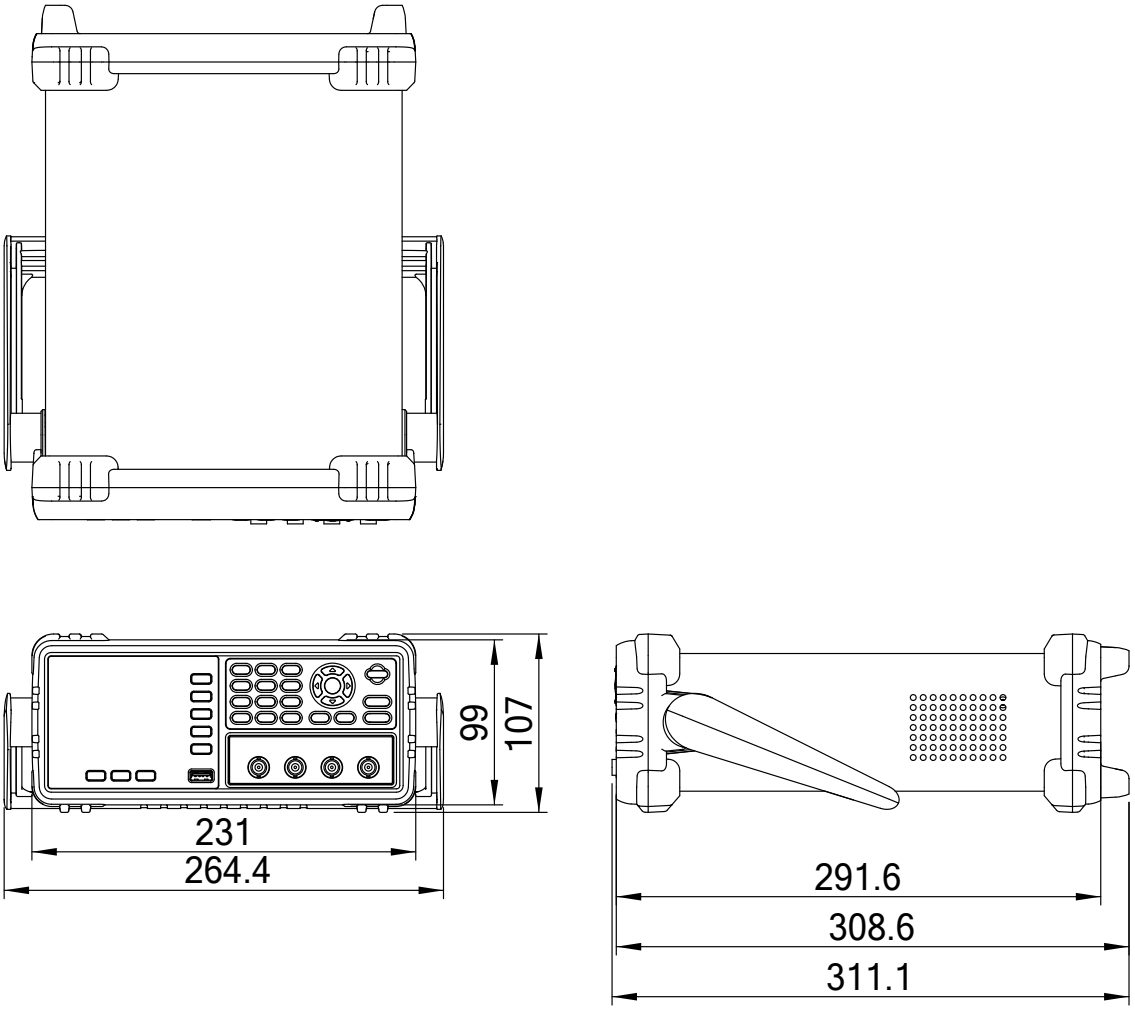

13. ACCURACY

This section will explain the meter's accuracy, measurement tolerance and how to test the meter's performance. It includes:

- Accuracy
- Factors that decide accuracy

The meters' accuracy is affected by the tolerances from measurement stability, temperature variation, circuit linearity and the measurement repeatability.

The meter's accuracy verification needs to be done under the following circumstances:

Warming up time: ≥ 30 minutes.

Perform Open/Short calibration correctly after warming up.

Set the meter to auto-ranging mode.

13.1 Accuracy

13.1.1 L, C, R |Z| Measurement Accuracy

The accuracies of L, C, R, |Z| is equal to A_e, which is defined by:

$$A_e = \pm[A \times A_r + (K_a + K_b + K_f) \times 100 + K_L] \times K_c \quad [\%]$$

A: Basic measurement accuracy

A_r: Basic accuracy correction factor

K_a: Impedance factor a

K_b: Impedance factor b

K_c: Temperature factor

K_f: Open/short trimming factor

K_L: Test leads' length factor

The method to calculate the accuracy of L and C depends on whether D_x (D measurement value)is ≤0.1 or not.

The method to calculate the accuracy of R depends on whether Q_x(Q measurement value) is ≤0.1 or not.

When D_x>0.1, L and C's accuracy factors, A_e, should be multiplied by $\sqrt{1+D_x^2}$.

When Q_x>0.1, R's accuracy factor, A_e, should be multiplied by $\sqrt{1+Q_x^2}$.

13.1.2 Accuracy for D

D's accuracy is defined below:

$$D_e = \pm\frac{Ae}{100} \text{ (when } D_x \leq 0.1\text{)}$$

When D_x>0.1, D_e should be multiplied by $(1+D_x)$

13.1.3 Accuracy for Q

Q's accuracy is defined below:

$$Q_e = \pm \frac{Q_x^2 \times D_e}{1 \mp Q_x \times D_e} \text{ (when } Q_x \times D_e < 1)$$

Where:
Q_x is the measured Q value.
D_e is D's accuracy.

13.1.4 Accuracy for θ

θ 's accuracy is defined below:

$$\theta_e = \frac{180}{\pi} \times \frac{A_e}{100} \qquad [\text{deg}]$$

13.1.5 Accuracy for Rp

When D_x (the measured D value)≤0.1, R_p's accuracy is defined as:

$$R_p = \pm \frac{R_{px} \times D_e}{D_x \mp D_e} \qquad [\Omega]$$

Where:
R_{px} is the measured R_p value [Ω].

D_x is the measured D value.

D_e is D's accuracy.

13.1.6 Accuracy for Rs

When D_x（measured D value）≤0.1

The accuracy of R_s is defined as:

$$R_{se} = X_x \times D_e \qquad [\Omega]$$

$$X_x = 2\pi f L_x = \frac{1}{2\pi f C_x}$$

Where:

X_x is the measured X value[Ω].

C_x is the measured C value[F].

L_x is the measured L value[H].

D_e is D's accuracy.

F is the measuring frequency.

13.2 Correction factors that affect measurement accuracy

The following will show how to decide the basic accuracy, A:

A is 0.05:

When the measuring signal is $0.4V_{rms} \leq V_s \leq 1.2V_{rms}$ and the measurement speed is slow or medium.

A is 0.1:

When the measuring signal is $0.4V_{rms} \leq V_s \leq 1.2V_{rms}$ and the measurement speed is fast.

When the measuring signal is $V_s < 0.4V_{rms}$ or $V_s > 1.2V_{rms}$ the basic accuracy, A, should be calculated according to the following description:

Write down the basic accuracy, A, for the measurement speed currently being used and then write down the correction factor, A_r, according to the amplitude of the measuring signal being currently used (see Figure 13-2). Let A be multiplied by A_r to get the actual basic accuracy, A, for that moment. V_s represents the amplitude of the measuring signal.

Figure 13-1 The basic measurement accuracy A

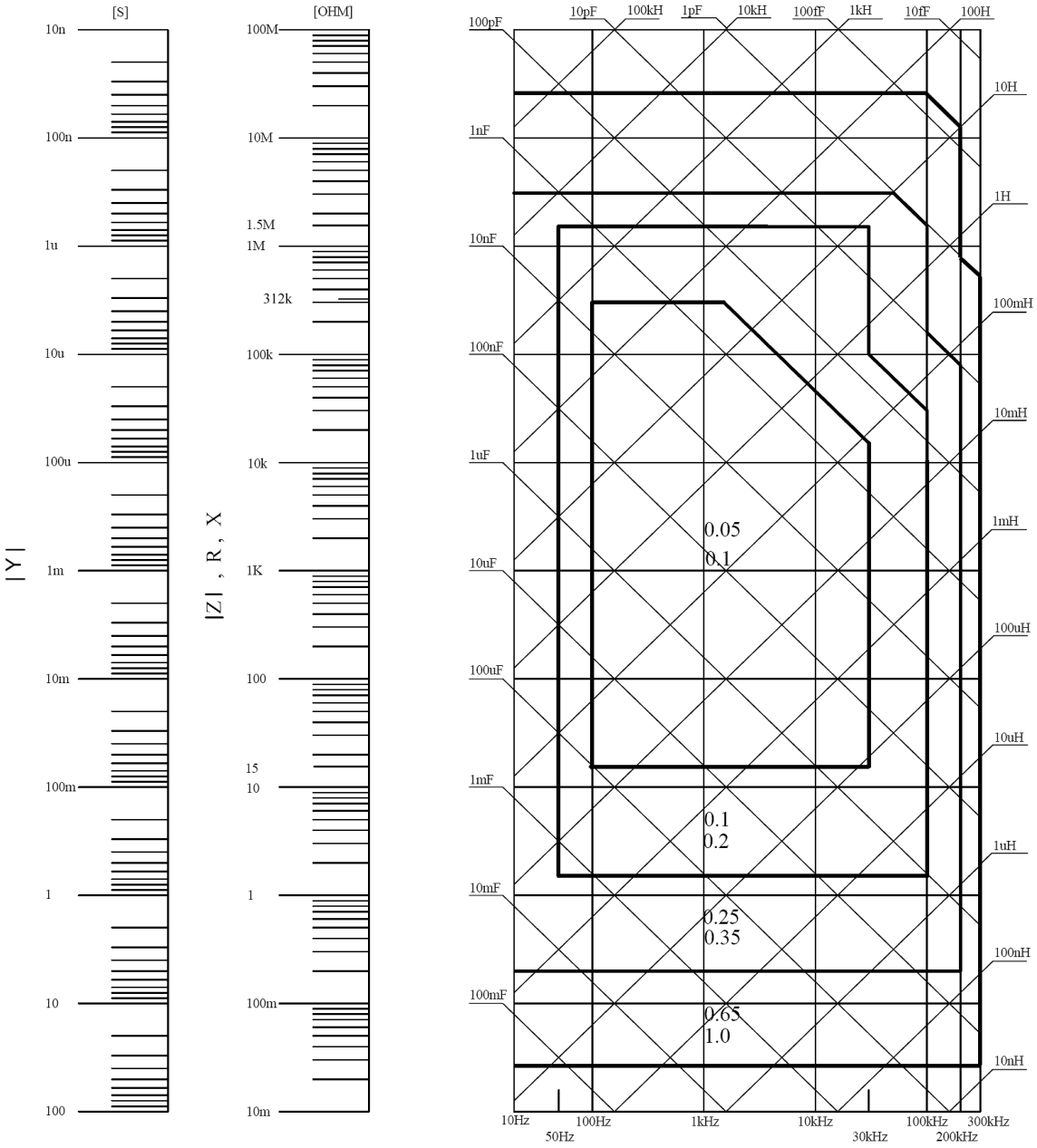

If the accuracy for the spot you are searching for falls right on the line, e.g. the horizontal thick line between values 0.25 and 0.65, then use the smaller value, 0.25, for the basic accuracy of the spot you are searching for.

Figure 13-2 Table for basic accuracy correction factor A_r

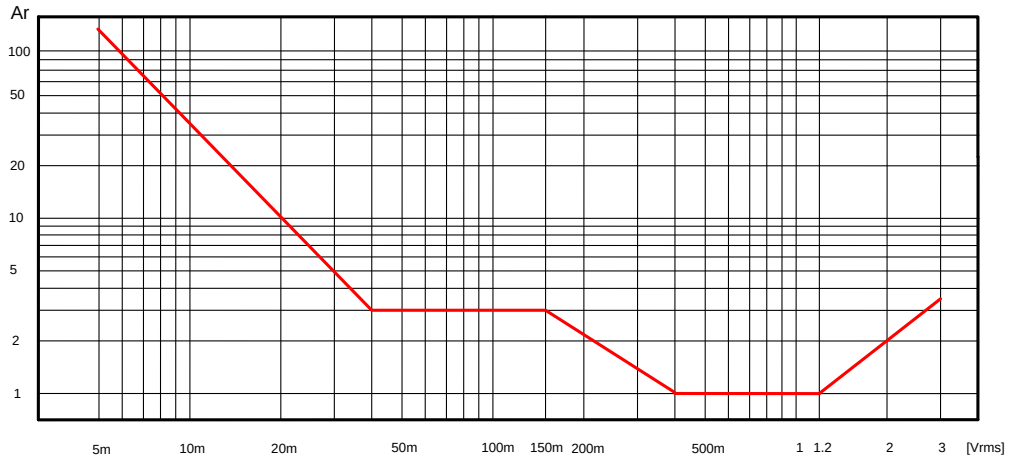

Table 13-1 Impedance correction factors

Measurement speed	Measuring frequency	K_a	K_b
Slow Medium	f_m<100Hz	$(\frac{1\times10^{-3}}{\lvert Z_m\rvert})(1+\frac{200}{V_s})(1+\sqrt{\frac{100}{f_m}})$	$\lvert Z_m\rvert(1\times10^{-9})(1+\frac{70}{V_s})(1+\sqrt{\frac{100}{f_m}})$
	100Hz≤f_m≤100kHz	$(\frac{1\times10^{-3}}{\lvert Z_m\rvert})(1+\frac{200}{V_s})$	$\lvert Z_m\rvert(1\times10^{-9})(1+\frac{70}{V_s})$
	f_m>100kHz	$(\frac{1\times10^{-3}}{\lvert Z_m\rvert})(2+\frac{200}{V_s})$	$\lvert Z_m\rvert(3\times10^{-9})(1+\frac{70}{V_s})$
Fast	f_m<100Hz	$(\frac{2.5\times10^{-3}}{\lvert Z_m\rvert})(1+\frac{400}{V_s})(1+\sqrt{\frac{100}{f_m}})$	$\lvert Z_m\rvert(2\times10^{-9})(1+\frac{100}{V_s})(1+\sqrt{\frac{100}{f_m}})$
	100Hz≤f_m≤100kHz	$(\frac{2.5\times10^{-3}}{\lvert Z_m\rvert})(1+\frac{400}{V_s})$	$\lvert Z_m\rvert(2\times10^{-9})(1+\frac{100}{V_s})$
	f_m>100kHz	$(\frac{2.5\times10^{-3}}{\lvert Z_m\rvert})(2+\frac{400}{V_s})$	$\lvert Z_m\rvert(6\times10^{-9})(1+\frac{100}{V_s})$

f_m: Measuring frequency [Hz]

Z_m: The impedance of the DUT [Ω]

V_s: The amplitude of the measuring signal [mVrms]

When the impedance is less than 500Ω then use K_a; K_b can be ignored.

When the impedance is larger than 500Ω then use K_b; K_a can be ignored.

Table 13-2 Temperature correction factor K_c

Temp (°C)	5	8	18	28	38	
K_c	6	4	2	1	2	4

Table 13-3 Correction factor for interpolated open/short trimming K_f

Test frequency	K_f
When test frequency equals to the open/short trimming frequency	0
When test frequency is not equal to the open/short trimming frequency	0.0003

Please refer to 12.1 general specification section for what the open/short trimming frequency points are for each T3LCR models.

Table 13-4 Correction factors for the cable length of test leads K_L

Amplitude of the test signal	Cable length of the test leads		
	0m	1m	2m
≤1.5Vrms	0	$2.5\times10^{-2}(1+0.5f_m)$	$5\times10^{-2}(1+0.5f_m)$
>1.5Vrms	0	$2.5\times10^{-2}(1+0.9f_m)$	$5\times10^{-2}(1+1.1f_m)$

In above table, f_m represents the frequency of the measuring signal [kHz].

Certifications

Teledyne LeCroy certifies compliance to the following standards as of the time of publication. Please see the EC Declaration of Conformity document shipped with your product for current certifications.

EMC Compliance

EC DECLARATION OF CONFORMITY - EMC

The instrument meets intent of EC Directive 2014/30/EU for Electromagnetic Compatibility. Compliance was demonstrated to the following specifications listed in the Official Journal of the European Communities:

EN 61326-1:2013, EN 61326-2-1:2013 EMC requirements for electrical equipment for measurement, control, and laboratory use.[*1]

Electromagnetic Emissions:

EN 55011:2016+A1:2017, Radiated and Conducted Emissions Group 1, Class A[*2*3]

EN 61000-3-2:2014 Harmonic Current Emissions, Class A

EN 61000-3-3:2013 Voltage Fluctuations and Flickers, Pst = 1

Electromagnetic Immunity:

EN 61000-4-2:2009 Electrostatic Discharge, 4 kV contact, 8 kV air, 4 kV vertical/horizontal coupling planes[*4]

EN 61000-4-3:2006+ A2:2010 RF Radiated Electromagnetic Field, 3 V/m, 80-1000 MHz; 3 V/m, 1400 MHz-2 GHz; 1 V/m, 2 GHz-2.7 GHz

EN 61000-4-4:2012 Electrical Fast Transient/Burst, 1 kV on power supply lines, 0.5 kV on I/O signal data and control lines[*4]

EN 61000-4-5:2014+A1:2017 Power Line Surge, 1 kV AC Mains, L-N, L-PE, N-PE[*4]

EN 61000-4-6:2014 RF Conducted Electromagnetic Field, 3 Vrms, 0.15 MHz - 80 MHz

EN 61000-4-11:2004+A1:2017 Mains Dips and Interruptions, 0%/1 cycle, 70%/25 cycles, 0%/250 cycles[*4*5]

[*1] To ensure compliance with all applicable EMC standards, use high-quality shielded interface cables.

[*2] Emissions which exceed the levels required by this standard may occur when the instrument is connected to a test object.

[*3] This product is intended for use in nonresidential areas only. Use in residential areas may

cause electromagnetic interference.

[*4] Meets Performance Criteria "B" limits of the respective standard: during the disturbance, product undergoes a temporary degradation or loss of function or performance which is self-recoverable.

[*5] Performance Criteria "C" applied for 70%/25 cycle voltage dips and for 0%/250 cycle voltage interruption test levels per EN61000-4-11.

European Contact:*

Teledyne GmbH, European Division

Im Breitspiel 11c

D-69126 Heidelberg

Germany

Tel: + 49 6221 82700

AUSTRALIA & NEW ZEALAND DECLARATION OF CONFORMITY – EMC

The instrument complies with the EMC provision of the Radio Communications Act per the following standards, in accordance with requirements imposed by Australian Communication and Media Authority (ACMA):

AS/NZS CISPR 11:2015 Radiated and Conducted Emissions, Group 1, Class A.

Australia / New Zealand Contacts:*

RS Components Pty Ltd.

Suite 326 The Parade West

Kent Town, South Australia 5067

RS Components Ltd.

Units 30 & 31 Warehouse World

761 Great South Road

Penrose, Auckland, New Zealand

* Visit teledynelecroy.com/support/contact for the latest contact information.

Safety Compliance

EC DECLARATION OF CONFORMITY – LOW VOLTAGE

The instrument meets intent of EC Directive 2014/35/EU for Product Safety. Compliance was demonstrated to the following specifications as listed in the Official Journal of the European Communities:

EN 61010-1:2010 Safety requirements for electrical equipment for measurement, control, and laboratory use -

Part 1: General requirements

EN 61010-2:030:2010 Safety requirements for electrical equipment for measurement, control, and laboratory use -

Part 2-030: Particular requirements for testing and measuring circuits

The design of the instrument has been verified to conform to the following limits put forth by these standards:

- Mains Supply Connector: Overvoltage Category II, instrument intended to be supplied from the building wiring at utilization points (socket outlets and similar).
- Measuring Circuit Terminals: No rated measurement category. Terminals not intended to be connected directly to the mains supply.
- Unit: Pollution Degree 2, operating environment where normally only dry, non-conductive pollution occurs. Temporary conductivity caused by condensation should be expected.

Environmental Compliance

END-OF-LIFE HANDLING



The instrument is marked with this symbol to indicate that it complies with the applicable European Union requirements of Directives 2012/19/EU and 2006/66/EC on Waste Electrical and Electronic Equipment (WEEE) and Batteries.

The instrument is subject to disposal and recycling regulations that vary by country and region. Many countries prohibit the disposal of waste electronic equipment in standard waste receptacles. For more information about proper disposal and recycling of your Teledyne LeCroy product, please visit teledynelecroy.com/recycle.

RESTRICTION OF HAZARDOUS SUBSTANCES (RoHS)

EC DECLARATION OF CONFORMITY – RoHS

Unless otherwise specified, all the materials and processes are compliant with RoHS Directive 2011/65/EU in its entirety, inclusive of any further amendments or modifications of said Directive.

CHINA RoHS 2

Unless otherwise specified, all the materials and processes are compliant with the latest requirements of China RoHS 2. The hazardous substances contained in the instrument are disclosed in accordance with the standards SJ/T 11364-2014 (Marking for the restricted use of hazardous substances in electronic and electrical products) and GB/T 26572-2011 (Requirements on concentration limits for certain restricted substances in electrical and electronic products). The instrument is marked with an appropriate Environmental Friendly Use Period (EFUP) symbol. The packaging materials include the appropriate recycling labels. The below substance disclosure tables (in Chinese and English languages) provide the required compliance information.

部件名称	有毒有害物质和元素					
	铅 (Pb)	汞 (Hg)	镉 (Cd)	六价铬 (Cr6+)	多溴联苯 (PBB)	多溴二苯醚 (PBDE)
PCBAs	X	O	O	O	O	O
机械硬件	O	O	O	O	O	O
金属片	O	O	O	O	O	O
塑料部件	O	O	O	O	O	O
电缆组件	X	O	O	O	O	O
显示器	O	O	O	O	O	O
电源	O	O	O	O	O	O
风扇	O	O	O	O	O	O
电池	O	O	O	O	O	O
电源线	O	O	O	O	O	O
外部电源(如有)	X	O	O	O	O	O
探头(如有)	X	O	O	O	O	O
熔丝(如有)	O	O	O	O	O	O
产品外壳(如有)	O	O	O	O	O	O
适配器/模块(如有)	O	O	O	O	O	O
鼠标(如有)	O	O	O	O	O	O
O: 表明该有毒有害物质在该部件所有均质材料中的含量均在 SJ/T11364-2014 标准规定的限量要求之下。						
X: 表示该有毒有害物质至少在该部件的某一均质材料中的含量超出 SJ/T11364-2014 标准规定的限量要求。						

EFUP (对环境友好的使用时间): 30 年。

使用条件：参阅用户手册“环境条件”部分的规定。

探头 EFUP: 10 年。

Part Name	Toxic or Hazardous Substances and Elements					
	Lead (Pb)	Mercury (Hg)	Cadmium (Cd)	Hexavalent Chromium (Cr6+)	Polybrominated Biphenyls (PBB)	Polybrominated Diphenyl Ethers (PBDE)
PCBAs	X	O	O	O	O	O
Mechanical Hardware	O	O	O	O	O	O
Sheet Metal	O	O	O	O	O	O
Plastic Parts	O	O	O	O	O	O
Cable Assemblies	X	O	O	O	O	O
Display	O	O	O	O	O	O
Power Supply	O	O	O	O	O	O
Fans	O	O	O	O	O	O
Batteries	O	O	O	O	O	O
Power Cord	O	O	O	O	O	O
Ext Power Supply (if present)	X	O	O	O	O	O
Probes (if present)	X	O	O	O	O	O
Fuse (if present)	O	O	O	O	O	O
Product Case (if present)	O	O	O	O	O	O
Adapters/Modules (if present)	O	O	O	O	O	O
Mouse (if present)	O	O	O	O	O	O
O: Indicates that this toxic or hazardous substance contained in all of the homogeneous materials for this part is below the limit requirement specified in SJ/T11364-2014.						
X: Indicates that this toxic or hazardous substance contained in at least one of the homogenous materials used for this part is above the limit requirement specified in SJ/T11364-2014.						

EFUP (Environmental Friendly Use Period): 30 years.

Use Conditions: Refer to the environmental conditions stated in the User Manual.

EFUP for Probes: 10 years.

ABOUT TELEDYNE TEST TOOLS

TELEDYNE TEST TOOLS
Everywhereyoulook™

Company Profile

Teledyne LeCroy is a leading provider of oscilloscopes, protocol analyzers and related test and measurement solutions that enable companies across a wide range of industries to design and test electronic devices of all types. Since our founding in 1964, we have focused on creating products that improve productivity by helping engineers resolve design issues faster and more effectively. Oscilloscopes are tools used by designers and engineers to measure and analyze complex electronic signals in order to develop high-performance systems and to validate electronic designs in order to improve time to market.

The Teledyne Test Tools brand extends the Teledyne LeCroy product portfolio with a comprehensive range of test equipment solutions. This new range of products delivers a broad range of quality test solutions that enable engineers to rapidly validate product and design and reduce time-to-market. Designers, engineers and educators rely on Teledyne Test Tools solutions to meet their most challenging needs for testing, education and electronics validation.

Location and Facilities

Headquartered in Chestnut Ridge, New York, Teledyne Test Tools and Teledyne LeCroy has sales, service and development subsidiaries in the US and throughout Europe and Asia. Teledyne Test Tools and Teledyne LeCroy products are employed across a wide variety of industries, including semiconductor, computer, consumer electronics, education, military/aerospace, automotive/industrial, and telecommunications.

Distributed by:

Teledyne LeCroy (US Headquarters)

700 Chestnut Ridge Road
Chestnut Ridge, NY. USA 10977-6499

Phone: 800-553-2769 or 845-425-2000
Fax Sales: 845-578-5985
Phone Support: 1-800-553-2769
Email Sales: contact.corp@teledynelecroy.com
Email Support: support@teledynelecroy.com
Web Site: http://teledynelecroy.com/

Teledyne LeCroy (European Headquarters)

Teledyne LeCroy GmbH
Im Breitspiel 11c
D-69126 Heidelberg, Germany

Phone: + 49 6221 82700
Fax: +49 6221 834655
Fax Sales: +49 6221 834655
Fax Service: +41 22 719 22 99
Email Sales: contact.gmbh@teledynelecroy.com
Email Service: service.gmbh@teledynelecroy.com
Email Support: applicatons.de@teledynelecroy.com
Web Site: http://teledynelecroy.com/germany
Phone Service: +49 6221 8270 85
Phone Support: +49 6221 8270 28

World wide support contacts can be found at:
https://teledynelecroy.com/support/contact

© 2020 Teledyne Test Tools is a brand and trademark of Teledyne LeCroy Inc. All rights reserved. Specifications, prices, availability and delivery subject to change without notice. Product brand or brand names are trademarks or requested trademarks of their respective holders.

T3 stands for Teledyne Test Tools.

933531 Rev1