Linkeo 19” freestanding cabinets

Catalogue number(s): 6 467 50/51/55/56/60/61/62/63
6 467 64/65/66/67/68/70/73/74



CONTENTS **Page**

1. General characteristics 1
2. Range 2
3. Technical characteristics.....3
4. Dimensions.....4
5. Baying.....8
6. Plinths.....9
7. Cable management.....9
8. Fan kits 11
9. PDU supports..... 11
10. Castors 12
11. 19" equipement 12

1. GENERAL CHARACTERISTICS

Linkeo 19" freestanding cabinets are intended for digital infrastructures.

Linkeo 19" cabinets are metal and provide IP20 - IK08 protection.
They have a single or double screen-printed glass door and are finished throughout in charcoal grey RAL 7016.

Linkeo 19" cabinets can be joined together and can be equipped with a plinth.

Equipment and accessories for thermal management and cable management complete the range.

■ 1.1 Presentation

The main parts of Linkeo 19" freestanding cabinets are:
- A framework consisting of 4 uprights and 2 end plates
- A single or double screen-printed flat glass front door
- 2 side panels (excluding extension cabinet)
- A rear panel
- Two 19" uprights (two additional uprights possible)

The 4 structural uprights and the 2 end plates form a metal framework. The upper and lower end plates comprise precut areas which can be knocked with a mallet: one area capable of receiving a fan kit on the top end plate and one cable entry (three cable entries for cabinets 800 mm wide). Cable entries can be equipped with the set of brushes cat n° 6 464 28 (see section 7.1).

The whole structure stands on 4 levelling feet that can be adjusted from the inside and the outside of the cabinet.

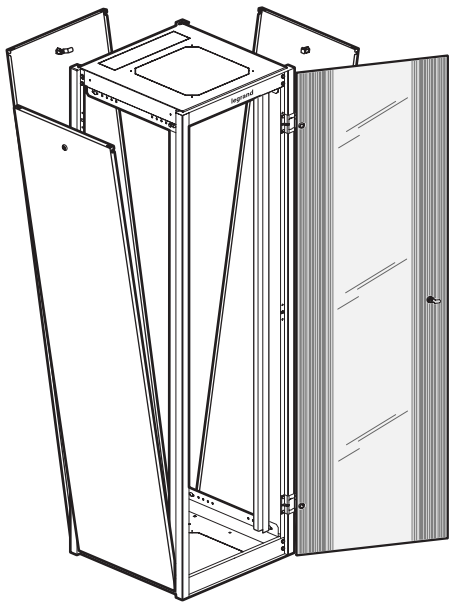

1. GENERAL CHARACTERISTICS (continued)

■ 1.1 Presentation (continued)

The single front door comprises :
- flat colourless transparent glass with screen-printing on the verticale edges
- a locking bolt
- 2 metal hinges (3 for 47U height)

The double front door comprises :
- two half-doors made of flat colourless transparent glass with screen-printing on the external vertical edges
- a locking bolt located at the top of each half door
- two metal hinges on each half-door

The 2 models of doors are removable and single door is reversible.

The side and rear metal panels are equipped with:
- A locking bolt
- A stainless steel equipotential link clip

Each panel is easily removable.

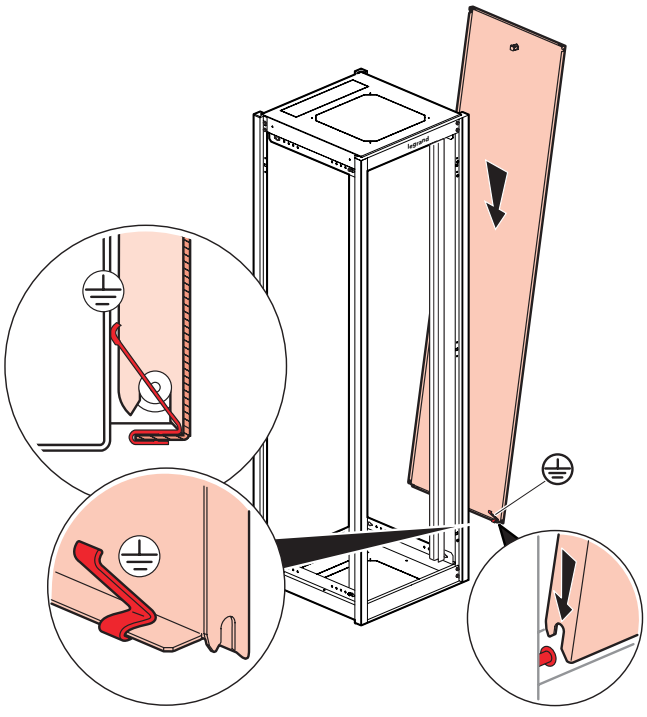

A clip automatically provides continuity of the metal conductive parts between each panel and the rest of the cabinet.

1. GENERAL CHARACTERISTICS (continued)

1.1 Presentation (continued)

The 19" uprights have dual marking of the Us and can be adjusted in depth by 25 mm steps:

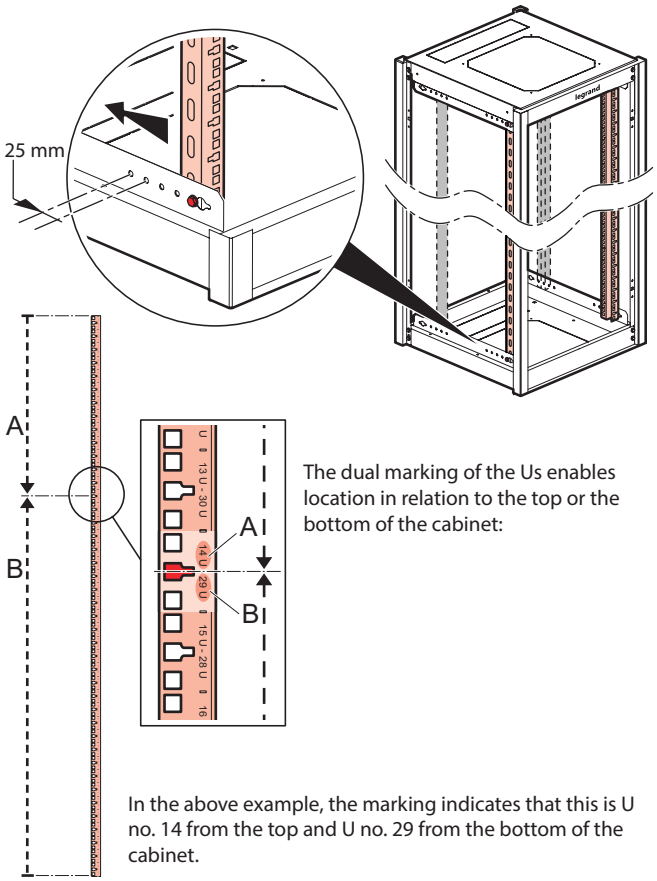

The dual marking of the Us enables location in relation to the top or the bottom of the cabinet:

In the above example, the marking indicates that this is U no. 14 from the top and U no. 29 from the bottom of the cabinet.

The 19" uprights are perforated with 9.5 x 9.5 mm square holes.

Linkeo 19" freestanding cabinets can be fitted with a set of 2 additional uprights at the back:

Cat. No.	Set of two 19" uprights
6 463 40	For 24U cabinet
6 463 41	For 33U cabinet
6 463 42	For 42U cabinet
6 463 43	For 47U cabinet

1.2 Standards

Linkeo 19" freestanding cabinets comply with the following standards:

IEC 60529 EN 60529	(NF C 20-010) Degrees of protection provided by enclosures (IP code)
IEC 62262 EN 62262	(NF EN 50102, NF C 20-015) Degrees of protection provided by enclosures for electrical equipment against external mechanical impacts (IK code)
IEC 60950-1 EN 60950-1 C 77-210-1	Safety of information technology equipment
EIA-310-E	Cabinets, racks, panels and associated equipment (ANSI/EIA/310-E-2005)
IEC 60297-3-100 DIN 41414-7	(NF C 20-150, NF C 20-151) Dimensions of mechanical structures of the 482.6 mm series (19 in)

1. GENERAL CHARACTERISTICS (continued)

1.2 Standard (continued)

Linkeo 19" freestanding cabinets can be integrated in installations complying with the following standards:

EN 50173-1	Information technology - Generic cabling systems
EN 50174-1 & 2 C 90-480-1 & 2	Information technology - Cabling installation
ISO IEC 11801	Information technology - Generic cabling for customer premises
NF C 15-100 Partie 4-41	Low voltage electrical installations - recommendations
IEC 60364-4-41	Low voltage electrical installations - Protection for safety - Protection against electric shock

2. RANGE

2.1 Cabinets with single front door

Cat. No.	Capacity	Width (1) (mm)	Depth (1) (mm)
6 467 50	24U	600	600
6 467 51	24U	800	800
6 467 55	33U	600	600
6 467 56	33U	800	800
6 467 60	42U	600	600
6 467 61	42U	600	800
6 467 62	42U	600	1000
6 467 63	42U	800	600
6 467 64	42U	800	800
6 467 65	42U	800	1000
6 467 73	47U	800	800
6 467 74	47U	800	1000

One extension freestanding cabinet complete the range. This is supplied without side panels and with a baying kit:

Extension cabinet

Cat. No.	Capacity	Width (1) (mm)	Depth (1) (mm)
6 467 70	42U	800	800

2.2 Cabinets with double front door

Door opening suitable for small spaces

Cat. No.	Capacity	Width (1) (mm)	Depth (1) (mm)
6 467 66	42U	800	600
6 467 67	42U	800	800
6 467 68	42U	800	1000

To meet specific requirements, the made-to-measure department offers additionnal sizes and various configurations: front and rear door (microperforations, metal double door...), mounting of equipment...

(1) Designated dimensions. See section 4.1 for overall dimensions.

3. TECHNICAL CHARACTERISTICS

3.1 Index of protection

- IP20 according to IEC EN 60529
  Protected against solid objects larger than 12.5 mm in diameter
- IK08 according to IEC EN 62262
  Protected against mechanical impact with an energy of 5 joules

3.2 Mechanical performance

- Permissible load: 400 kg

3.3 Design

- Structural uprights made of 1.5 mm thick galvanised steel + paint
- Upper end plate made of 1.25 mm thick galvanised steel + paint (except 42U and 47U cabinets)
- Lower end plate made of 1.5 mm thick Z140 MB-C galvanised steel
- Flat front door(s) made of 5 mm thick colourless transparent safety glass
  Grey RAL 7016 internal screen-printing on the vertical edges:
  2x92 mm in 600 mm width,
  2x188 mm in 800 mm width
- Door(s) hinges made of zamak + paint
- Panels made of 0.8 mm thick sheet steel renforced by flattened folds + paint
- Legrand marked in grey RAL 7035 on upper horizontal strip
- Door(s) bolt made of chrome-plated metal
- Grey RAL 7016 plastic panels bolt with key barrel made of zamak
- 19" uprights made of 1.5 mm thick galvanised steel
  Number of U marked using black inkjet marking
- Levelling feet made of zinc-plated steel with black polypropylene fixed base

3.4 Corrosion resistance

- Corrosive environment class:
  C2 according to EN ISO 12944-2,
  3K3 according to IEC EN 60721-3-3
- Salt spray test according to ISO 9227 (NSS test) and IEC EN 60068-2-11 (Ka test) for 168 hours:
  degree of rusting Ri1 according to ISO 4628-3,
  propagation ≤ 1 mm according to ISO 4628-8
- Sulphur dioxide (SO2) test according to EN ISO 6988 for 48 hours:
  degree of rusting Ri1 according to ISO 4628-3,
  ISO 10289 annex A class 8 type image

3.5 Properties of the paint coating

- Thermosetting polyester paint applied by electrostatic dusting
- Charcoal grey RAL 7016
- Textured satin appearance
- 60 to 80 mm µm thick
- Excellent impact and scratch resistance
- Excellent resistance to cleaning agents (excluding strong chlorinated, fluorinated and ketone solvents)
  Some products may change the appearance. It is therefore advisable to carry out a test first
- Light exposure test (xenon-arc lamp) according to ISO 4892-2 method B for 500 hours: no visible fading

3. TECHNICAL CHARACTERISTICS (continued)

3.6 Electrical continuity of the conductive parts

Continuity of the cabinet metal conductive parts is achieved by design. For each panel, a stainless steel clip automatically provides the equipotential link by pressing against the lower end plate with galvanised steel finish.

3.7 Weight

Indicative net weight excluding packaging

Cabinet Cat. No.	Weight (kg)
6 467 50	61
6 467 51	79
6 467 55	74
6 467 56	98
6 467 60	88
6 467 61	100
6 467 62	112
6 467 63/66	107/107
6 467 64/67 (extension 6 467 70)	131/97 (82)
6 467 65/68	130/107
6 467 73	113
6 467 74	115

Nota : Linkeo 19" cabinets are delivered on a 125 mm high pallet.

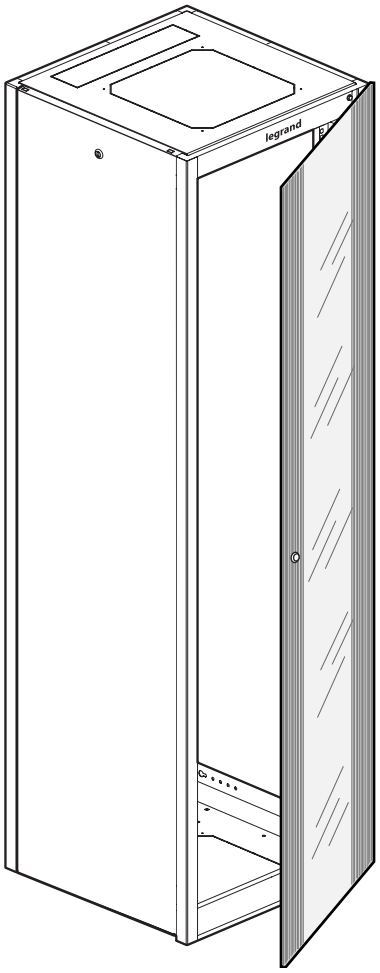

4. DIMENSIONS

All dimensions are in mm.

■ 4.1 Dimensions

Model shown: 600 x 600 mm cabinet/800 x 800 mm double door cabinet.

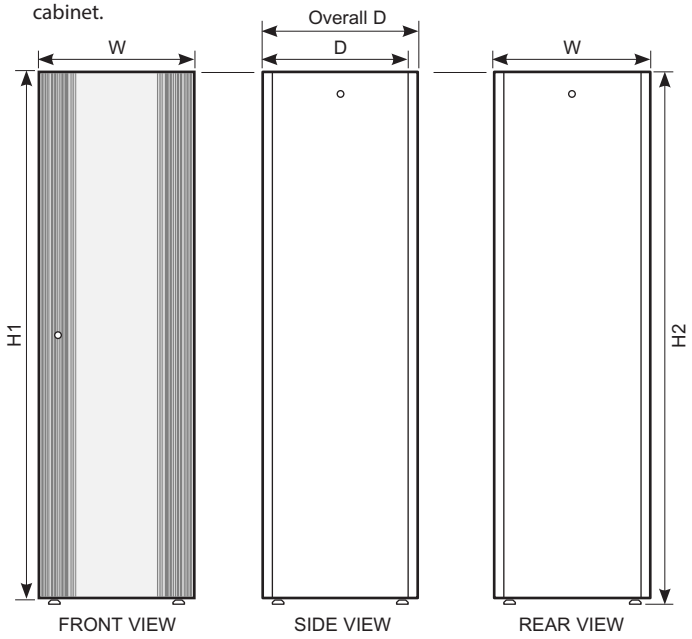

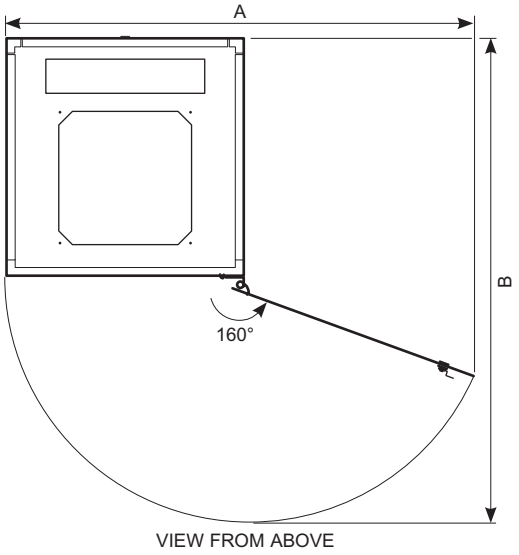

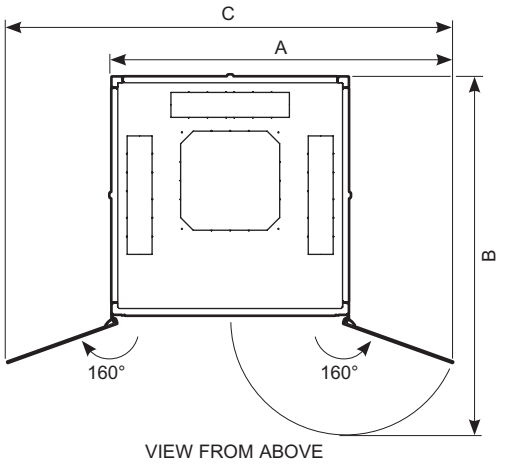

4. DIMENSIONS (continued)

■ 4.1 Dimensions (continued)

Single front door cabinets

Cat. No	Capacity	W(1)	D(1)	Overall dimensions					
				H1(2)	H2 min / max(3)	W	D	A	B
6 467 50	24U	600	600	1226	1245 / 1265	610	630	1138	1210
6 467 51	24U	800	800	1226	1245 / 1265	810	830	1525	1610
6 467 55	33U	600	600	1626	1645 / 1665	610	630	1138	1210
6 467 56	33U	800	800	1626	1645 / 1665	810	830	1525	1610
6 467 60	42U	600	600	2026	2045 / 2065	610	630	1138	1210
6 467 61	42U	600	800	2026	2045 / 2065	610	830	1138	1410
6 467 62	42U	600	1000	2026	2045 / 2065	610	1030	1138	1610
6 467 63	42U	800	600	2026	2045 / 2065	810	630	1525	1410
6 467 64	42U	800	800	2026	2045 / 2065	810	830	1525	1610
6 467 65	42U	800	1000	2026	2045 / 2065	810	1030	1525	1810
6 467 73	47U	800	800	2248	2267 / 2287	810	830	1525	1610
6 467 74	47U	800	1000	2248	2267 / 2287	810	1030	1525	1810
Extension cabinet									
6 467 70	42U	800	800	2026	2045 / 2065	800	830	1525	1610

Double front door cabinets

Cat. No	Capacity	W(1)	D(1)	Overall dimensions						
				H1(2)	H2 min / max(3)	W	D	A	B	C
6 467 66	42U	800	600	2026	2045 / 2065	810	630	1164	1011	1528
6 467 67	42U	800	800	2026	2045 / 2065	810	830	1164	1211	1528
6 467 68	42U	800	1000	2026	2045 / 2065	810	1030	1164	1411	1528

(1) Designated dimensions
(2) Without level adjustment feet
(3) With level adjustment feet (+19 to 39 mm)

4. DIMENSIONS (continued)

■ 4.2 Usable dimensions

4.2.1 600 mm wide freestanding cabinets

600 mm wide cabinets are available in 3 heights: 24U, 33U and 42U

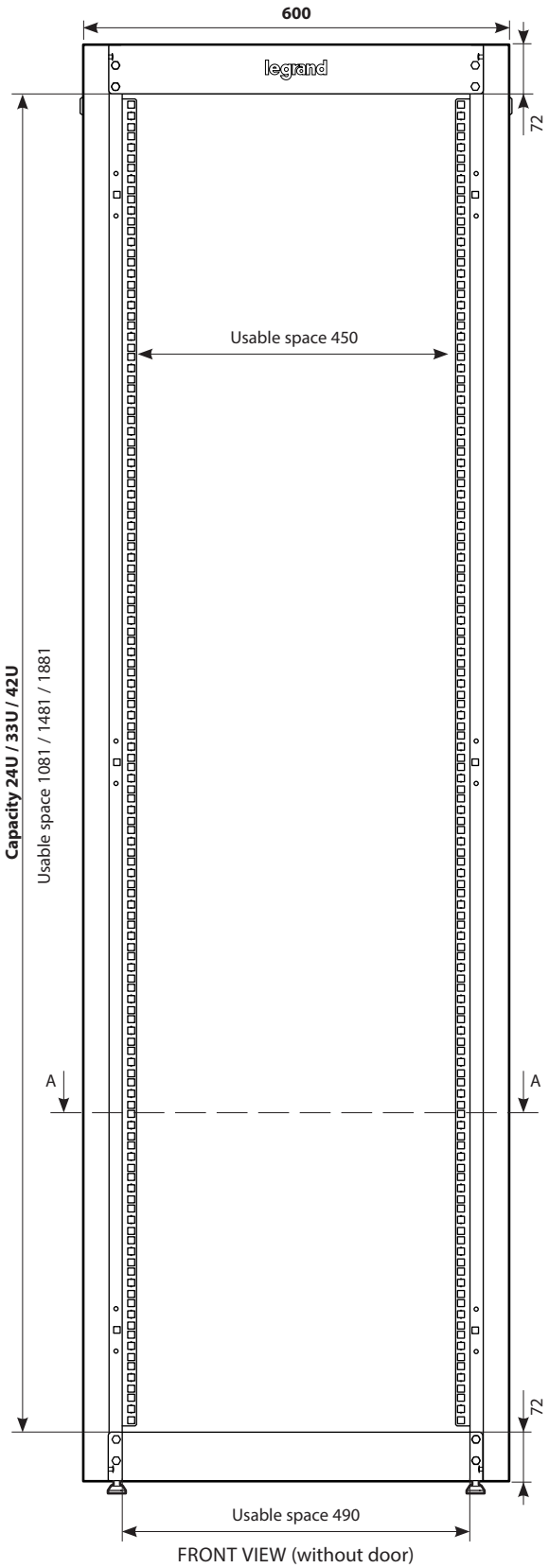

FRONT VIEW (without door)

4. DIMENSIONS (continued)

■ 4.2 Usable dimensions (continued)

4.2.1 600 mm wide freestanding cabinets (continued)

600 mm wide cabinets are available in 3 depths: 600, 800 and 1000 mm.
Model shown: 600 x 600 mm cabinet

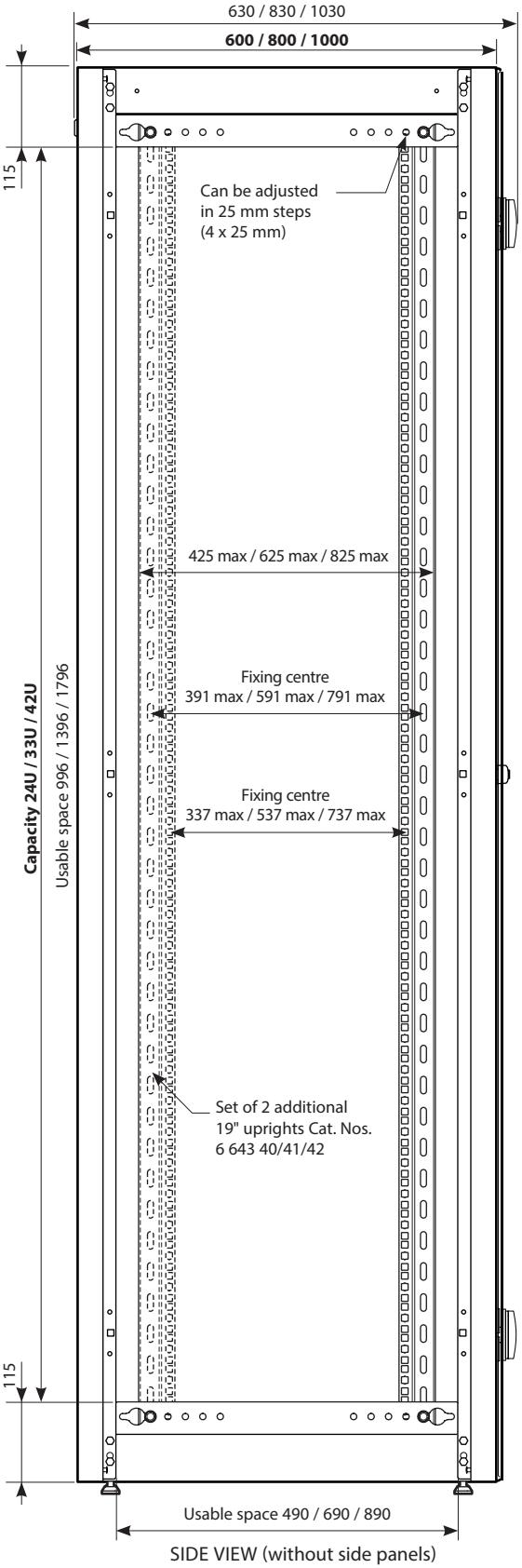

SIDE VIEW (without side panels)

4. DIMENSIONS (continued)

■ **4.2 Usable dimensions (continued)**

4.2.1 600 mm wide freestanding cabinets (continued)

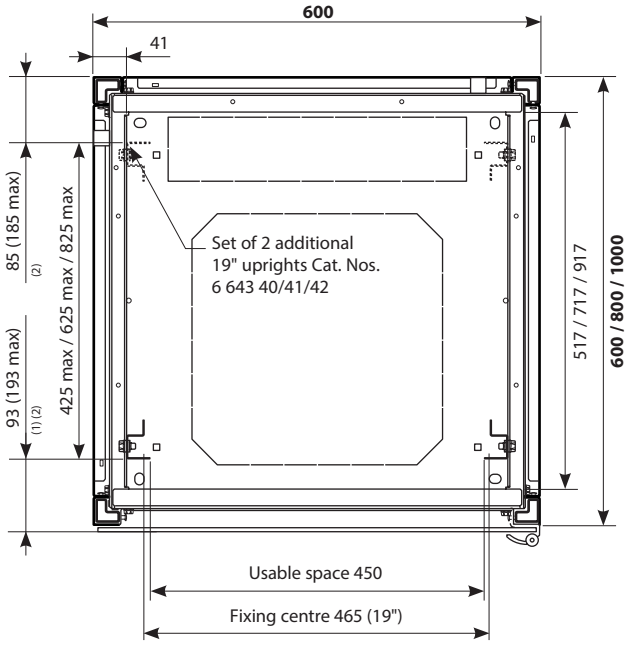

A-A CROSS-SECTION VIEW(3) (with door and side panels)

(1) Dimension below door on 19" uprights
(2) Can be adjusted in 25 mm steps
(3) See front view on page 5

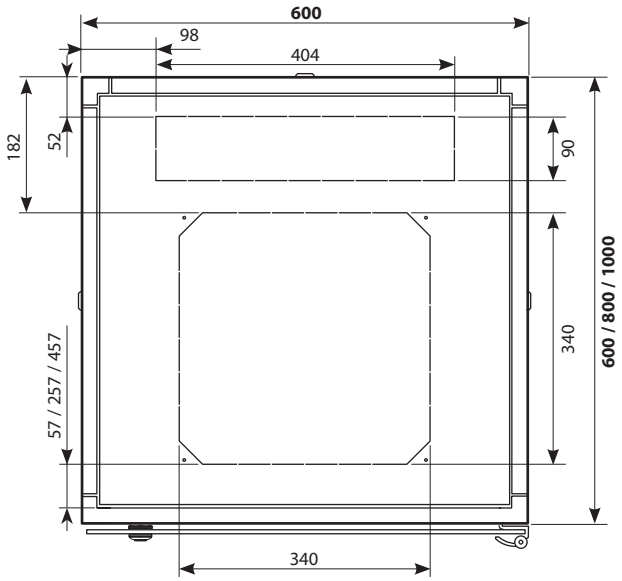

VIEW FROM ABOVE

Note : The dimensions of the upper and lower end plates are identicals.

4. DIMENSIONS (continued)

■ **4.2 Usable dimensions (continued)**

4.2.2 800 mm wide freestanding cabinets

800 mm wide cabinets are available in 4 heights: 24U, 33U, 42U and 47U

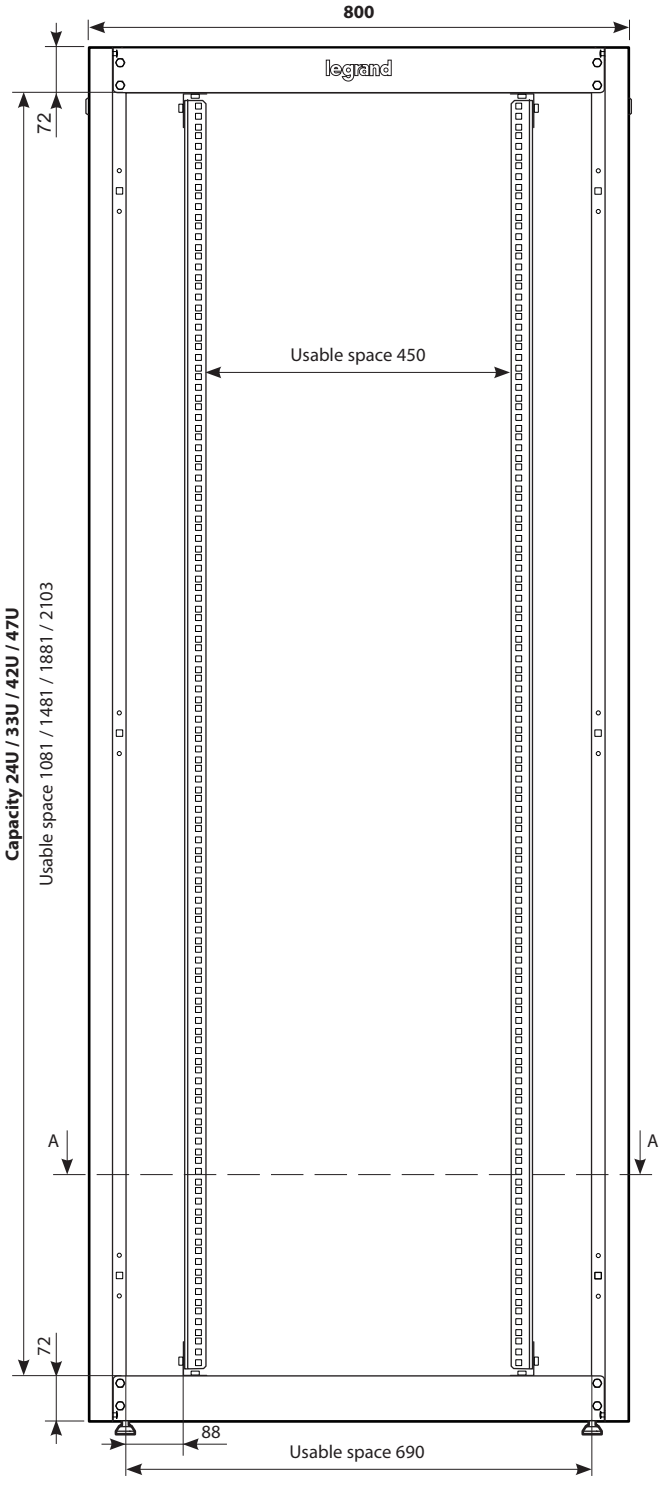

FRONT VIEW (without door)

4. DIMENSIONS (continued)

■ 4.2 Usable dimensions (continued)

4.2.2 800 mm wide freestanding cabinets (continued)

800 mm wide cabinets are available in 3 depths: 600, 800 and 1000 mm

Model shown: 800 x 800 mm single door cabinet

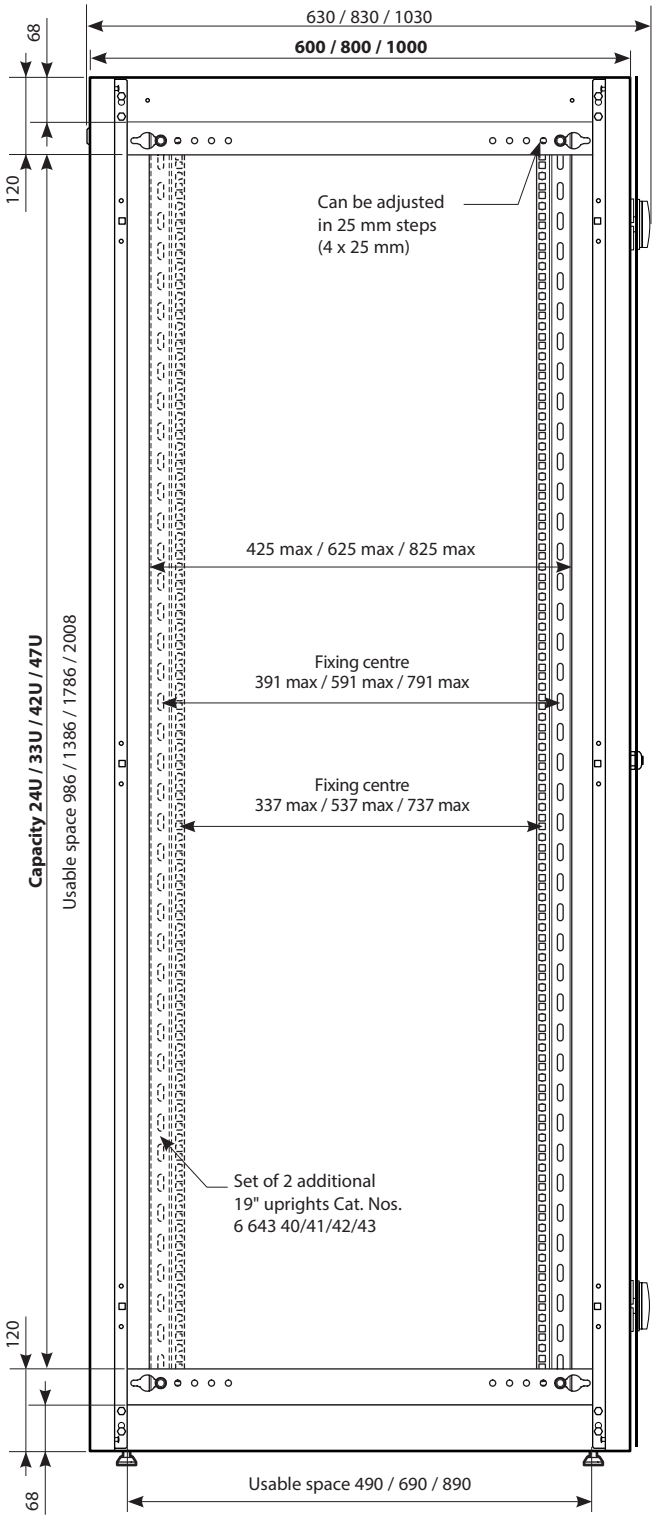

SIDE VIEW (without side panels)

4. DIMENSIONS (continued)

■ 4.2 Usable dimensions (continued)

4.2.2 800 mm wide freestanding cabinets (continued)

Model shown: 800 x 800 mm cabinet

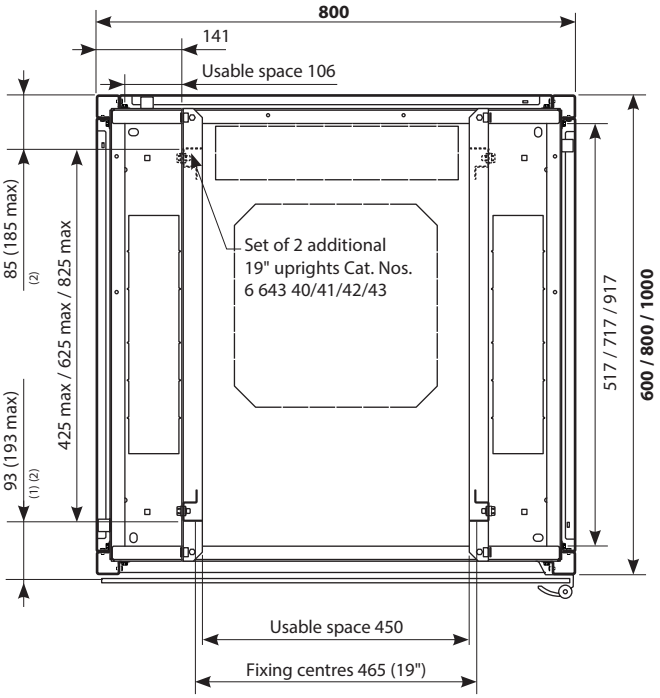

A-A CROSS-SECTION VIEW [3] (with door and side panels)

[1] Dimension below door on 19" uprights
[2] Can be adjusted in 25 mm steps
[3] See front view on page 6

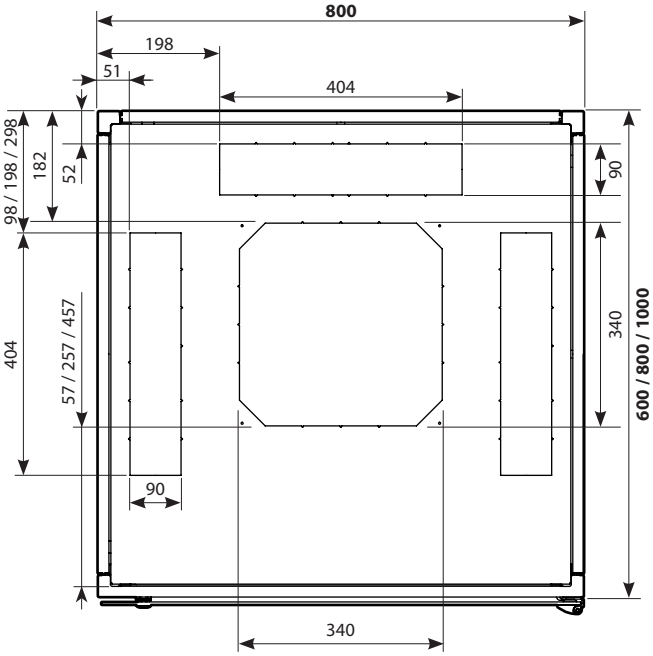

VIEW FROM ABOVE

Note : The dimensions of the upper and lower end plates are identical.

4. DIMENSIONS (continued)

■ 4.2 Usable dimensions (continued)

4.2.3 19" uprights

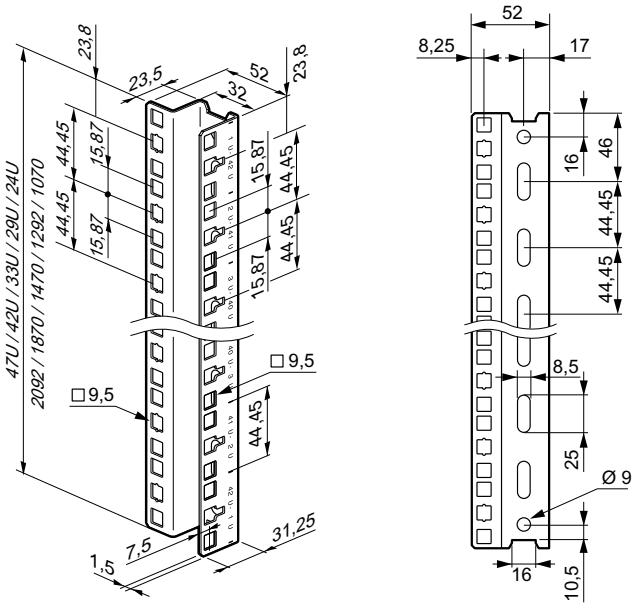

■ 4.3 Positioning of supports on the floor

The freestanding cabinets are equipped with 4 levelling feet.

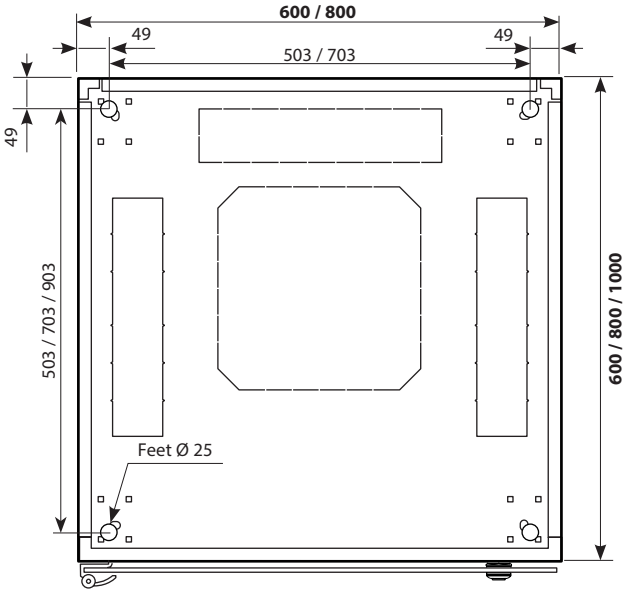

VIEW FROM BELOW

5. BAYING

Linkeo 19" freestanding cabinets can be joined laterally together using baying kit Cat. No. 6 463 37

Note : The Linkeo range includes a single door extension cabinet for the 42U x 800 x 800 size. This special cabinet is supplied with the baying kit and without side panels.

The kit consists of:
- 4 galvanised steel lugs
- A steel crosspiece + paint (same as cabinets)
- Fixing screws

The crosspiece can be separated manually to make it suitable for the various cabinet depths.

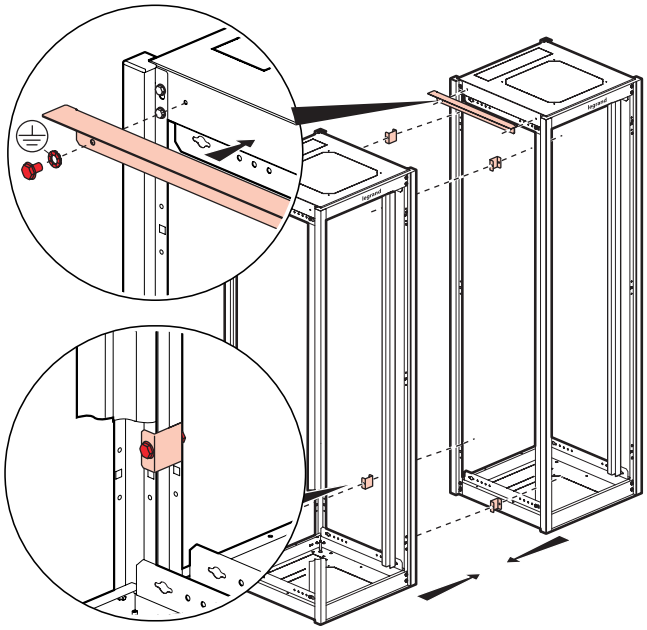

The crosspiece provides protection against dust and maintains the IP20 protection of the cabinets at the top..

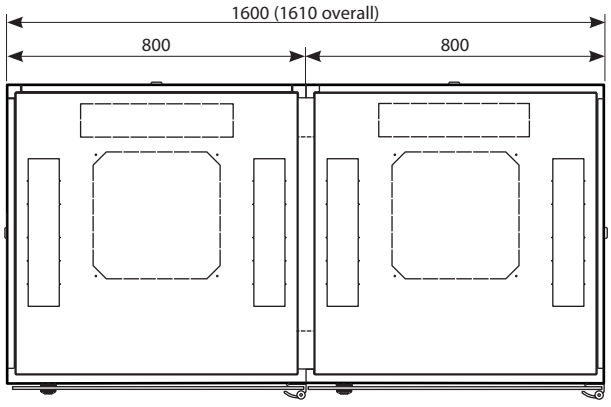

VIEW OF JOINED CABINETS FROM ABOVE

6. PLINTHS

Linkeo 19" freestanding cabinets can be equipped with a 100 mm high metal plinth.

Cat. No.	For cabinet width x depth (mm)
6 464 00	600 x 600
6 464 01	600 x 800 / 800 x 600
6 464 02	600 x 1000
6 464 03	800 x 800
6 464 04	800 x 1000

Linkeo plinths consist of 4 corner blocks and 4 removable traps.

The plinths are the same colour as the cabinets (charcoal grey RAL 7016).

The plinth is fixed directly to the cabinet end plate:

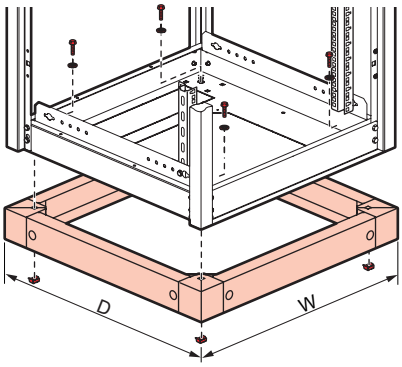

Note: It is possible to place 2 plinths one on top of the other.

Characteristics
- Plinth fixed using M12 screws
- Traps fixed using zinc-plated M6 screws
- Corner blocks made of 2 mm thick steel + paint (same as cabinets)
- Traps 1.5 mm thick steel + paint (same as cabinets) with double fold reinforcement on floor side
- Supplied with complete set of screws for the equipotential link with the cabinet
- Can be fixed to the floor (screws not supplied)

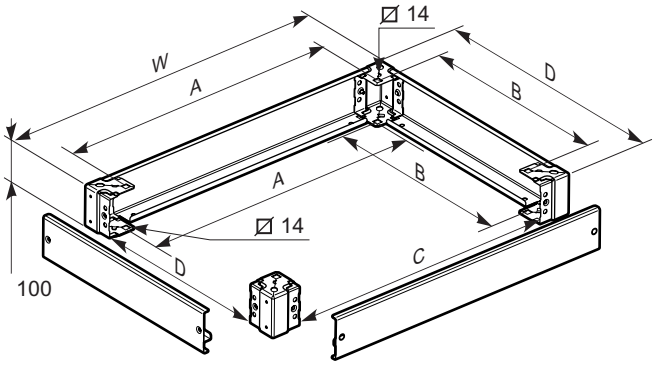

WxD	Dimensions (mm)					
	Overall		Fixing[1]		Usable space	
	W	D	A	B	C	D
600 x 600	599	599	478	478	449	449
600 x 800	599	799	478	678	449	649
600 x 1000	599	999	478	878	449	849
800 x 600	799	599	678	478	649	449
800 x 800	799	799	678	678	649	649
800 x 1000	799	999	678	878	649	849

[1] Identical dimensions when fixed to the floor

7. CABLE MANAGEMENT

■ 7.1 Brush cable entry

Linkeo 19" freestanding cabinets can take the set of bushes cat n° 6 464 28 at the upper and lower end plates cable entries.

Once you have knocked out the cut-out with a mallet, two bushes are fixed directly to the cabinet end plate:

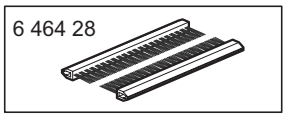

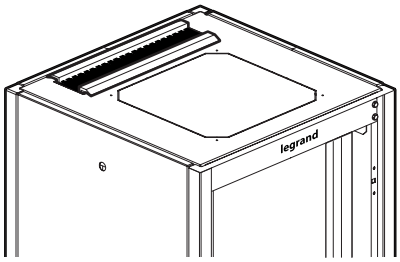

Characteristics
- One flexible brush
- One stiff brush
- Rubber frame
- Polyamide fibres
- Black

■ 7.2 Vertical cable trays

A side and/or rear cable trays can be installed in Linkeo 19" freestanding cabinets.

They are mounted directly on the structure in centered position:

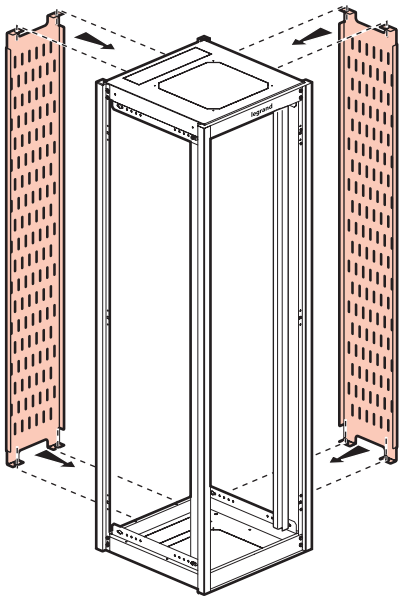

Cat. No.	Vertical cable tray
6 464 20	For 33U cabinet
6 464 21	For 42U cabinet
6 464 22	For 47U cabinet

7. CABLE MANAGEMENT (continued)

■ 7.2 Vertical cable tray (continued)

Characteristics

- 50 x 7 mm oblong perforations (possibility of clamping using cable ties)
- Supplied with screws
- 1.5 mm thick Z140 MB-C galvanised steel

Cat. No.	Overall dimensions (mm)
6 464 20	1486 x 300 x 25
6 464 21	1886 x 300 x 25
6 464 22	2105 x 300 x 25

■ 7.3 Cable management ring

Linkeo 19" 800 mm wide freestanding cabinets can be fitted with metal cable management rings Cat. No. 6 464 25 (set of 6).

The rings are mounted on the outside of the 19" uprights:

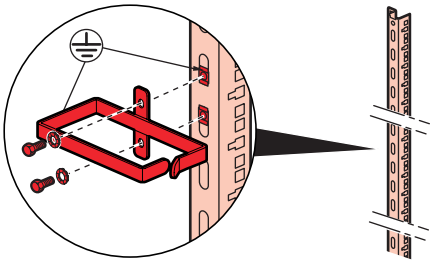

Characteristics

- Set of 6 rings
- Usable dimensions: 65 x 145 mm
- Supplied with screws
- Painted steel, 2.5 mm thick
- Black RAL 9005

■ 7.4 Vertical cable manager

800 mm wide 42U/47U 19" Linkeo freestanding cabinets can be fitted with the set of 2 vertical cable manager panels Cat.No 6 464 26/27.

These cable managers make it possible to organize the circulation of the wiring by means of feedthroughs with busches and plastic fingers every 1U.

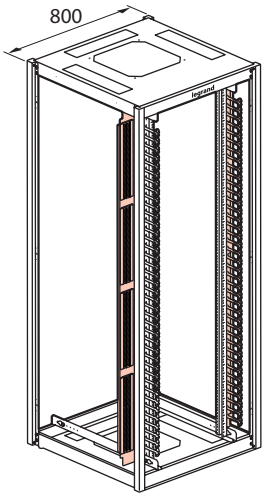

Cat. No.	Vertical cable manager
6 464 26	For 42U cabinet
6 466 27	For 47U cabinet

7. CABLE MANAGEMENT (continued)

■ 7.4 Vertical cable manager (continued)

The panels are fixed to the crosspiece of the top and bottom end plates of the cabinet :

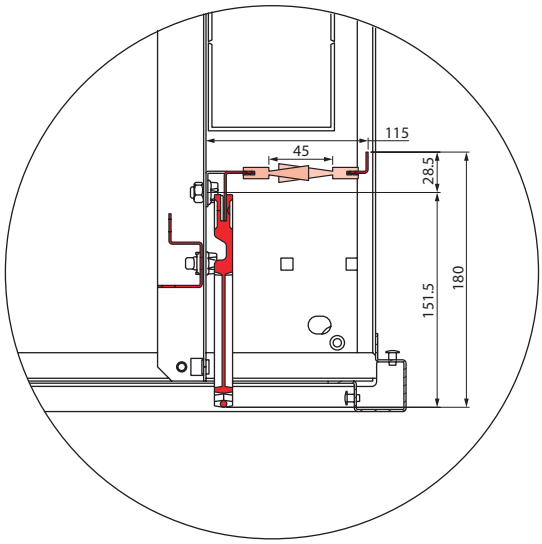

CROSS-SECTION VIEW

Features:

- Set of 2 cable managers
- Ability to adjust the depth of the 19" uprights retained
- Feedthroughs equipped with a flexible brush and a stiff brush
- Black brushes with polyamide fibres
- Supplied with 26 (42U)/30 (47U) three fingers units to clip
- Useable spaces: 404x45 mm for feedthroughs, 37x85 mm between two fingers
- Overall dimensions: 1880 (42U)/2102 (47U)x115x180 mm
- Fingers made of black polyamide
- Panels 1.5 mm thick steel with galvanized finish
- Supplied with screws

■ 7.5 Self-locking cable ties

Self-locking cable ties are repositionable textile ties that do not damage cables.



Cat. No.	Colour	Width (mm)	Length (mm)	Max. tightening Ø (mm)
0 331 84	Black	16	150	35
0 331 85	Red	16	150	35
0 331 86	Green	16	150	35
0 331 87	Black	16	300	80
0 331 88	Red	16	300	80
0 331 89	Green	16	300	80

- Tensile strength: >220 N
- Fire resistance: UL 94 V2
- Double-sided textile with "loops" on one side and "hooks" on the other

8. FAN KITS

Linkeo 19" freestanding cabinets can take a fan kit at the top ensuring a high extraction rate.

Cat. No.	No. of fans	Output (m3/hr)
6 464 30	2	180
6 464 31	4	360

Once you have knocked out the cut-out with a mallet, the kit is fixed directly to the cabinet end plate:

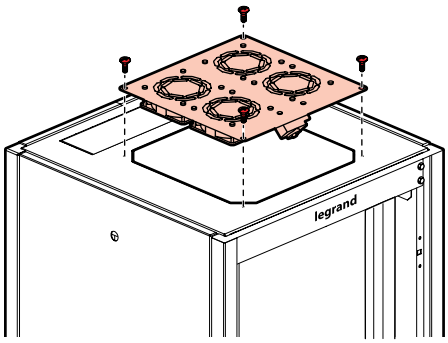

Characteristics
- IP XXB - IK08
- 230 V~ - 50/60 Hz power supply

Cat. No.	Current (A)	Power (W)
6 464 30	0.25	36
6 464 31	0.50	72

- Integrated thermostat, adjustable from -10° to +80°C
- Equipped with 3 x 0.75 mm2 flexible power supply cord, 2.5 m long with standard 2P+E French/German plug
- Fixed using self-tapping screws with pins (supplied)
- Plate made of steel + paint (same as cabinets)
- Grey RAL 7016

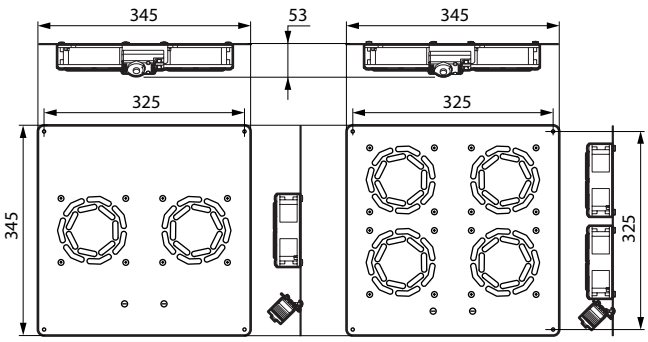

9. PDU SUPPORTS

- Vertical supports to be fixed at the side back of 42U/47U 19" Linkeo cabinets
- Make possible the mounting of the vertical PDU in 19" Linkeo cabinets
- Can receive 19" PDU vertically
- Many possibilities of fixing by screw. PDU with buttons can be fixed by hanging all 7U

9. PDU SUPPORTS (continued)

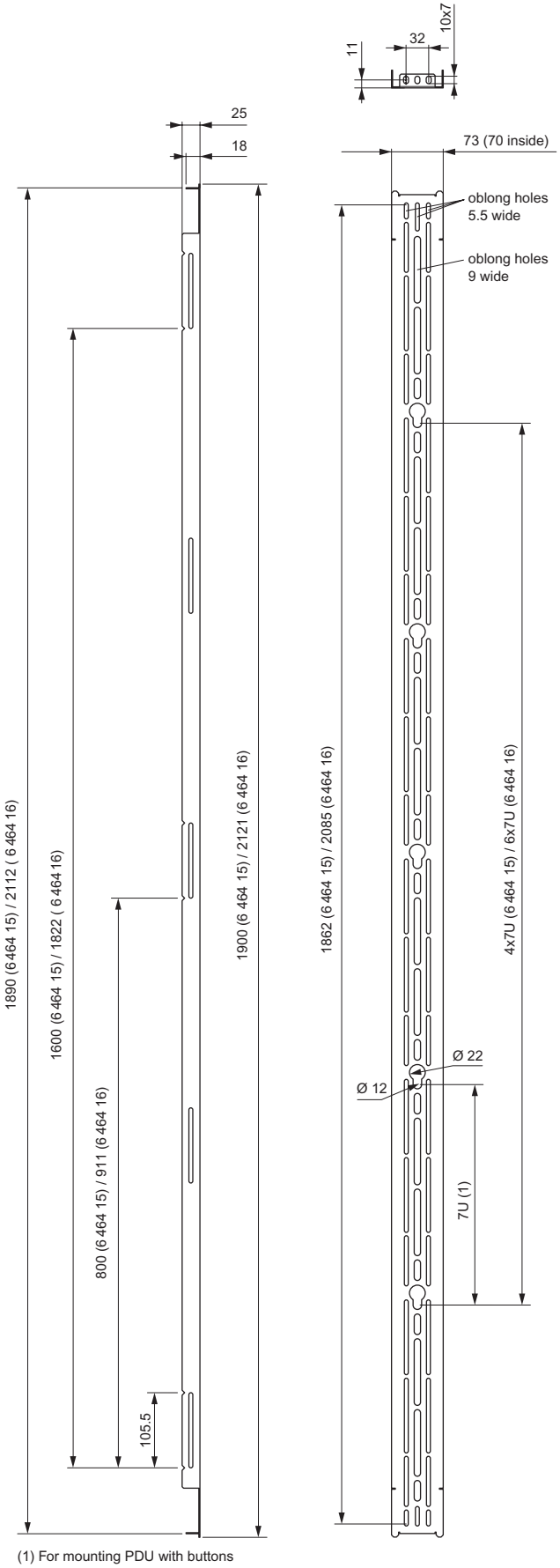

(1) For mounting PDU with buttons

9. PDU SUPPORTS (continued)

Cat. No.	PDU support
6 464 15	For 42U cabinet
6 464 16	For 47U cabinet

- Supplied with fixing screws
- 1.5 mm thick galvanised steel

PDUs
Legrand has a range of 19" PDU and vertical PDU. To know all their features, see specific data sheet.

10. CASTORS

Linkeo 19" freestanding cabinets can be equipped with a set of 4 pivoting castors Cat. No. 0 464 82.

Caution:
The total load on the 4 castors must not exceed 500 kg.

Characteristics
- Set of 4 castors, 2 of which have brakes
- Raise cabinet by 81 mm
- Supplied with fixing screws
- Black plastic wheel

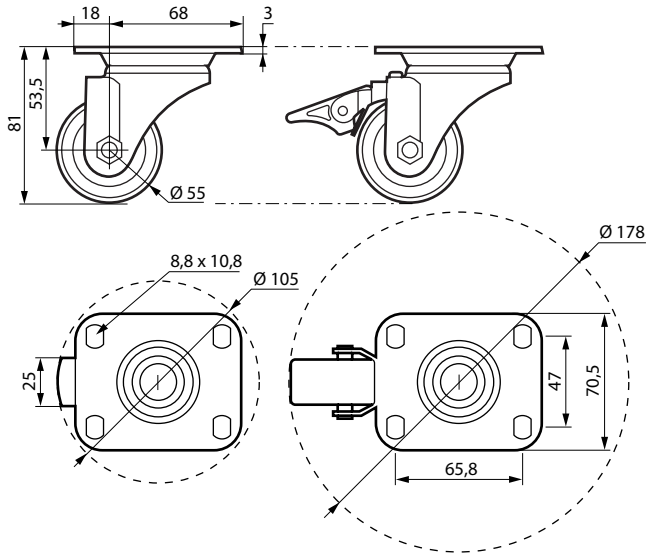

11. 19" EQUIPMENT

■11.1 Management panels with 2 axes

- Metal panels with horizontal feedthrough

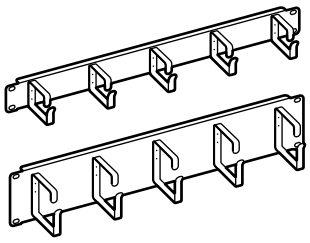

Cat. No.	Height	Depth (mm)	Ring usable cross-section (mm)
6 465 20	1U	68	39 x 45
6 465 21	2U	77	65 x 55

- Panels made of 1 mm thick zinc-plated steel
- Rings made of 2.5 mm thick zinc-plated steel
- Supplied with screws and cage nuts with pins
- Black RAL 9005

11. 19" EQUIPMENT (continued)

■11.2 Fixed shelves

11.2.1 Projecting mounting fixed shelf

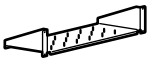

- Fixed by screwing onto 2 x 19" uprights

Cat. No.	Depth (mm)	Usable width (mm)
6 465 01	200	435
6 465 02	360	435

- Height 2U
- Max. load: 15 kg
- 50 x 7 mm oblong perforations (possibility of clamping using cable ties)
- Supplied with screws and cage nuts with pins
- 0.8 mm thick steel
- Black RAL 9005

11.2.2 Fixed shelf for fixing on 4 x 19" uprights

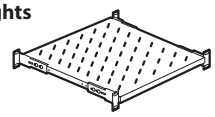

- Screw fixing
- Can be adjusted in 25 mm steps to the depth of the 19" uprights

Cat. No.	For cabinet depth (mm)	Depth (mm)	Width (mm)
6 465 05	600	425	440
6 465 06	800	625	440
6 465 07	1000	825	440

- Height 1U
- Max. load: 50 kg
- 50 x 7 mm oblong perforations (possibility of clamping using cable ties)
- Supplied with screws and cage nuts with pins
- Shelf made of 0.8 mm thick steel
- Black RAL 9005

■11.3 Telescopic shelves

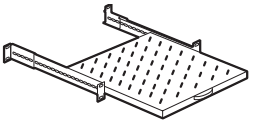

- Fixed by screwing onto 4 x 19" uprights
- Can be adjusted to the depth of the 19" uprights

Cat. No.	For cabinet depth (mm)	Depth (mm)	Width (mm)	Travel (mm)
6 465 08	600	425	410	295
6 465 09	800	625	410	445
6 465 10	1000	825	410	660

- Height 1U
- Max. load: 30 kg
- 50 x 7 mm oblong perforations (possibility of clamping using cable ties)
- Supplied with screws and cage nuts with pins
- Shelf made of 1.5 mm thick steel
- Black RAL 9005

Caution :
If there is a risk of tilting when heavy items are removed, the cabinet must be fixed to the floor.