BCC M415-M414-3A-304-PX0434-020
BCC039M

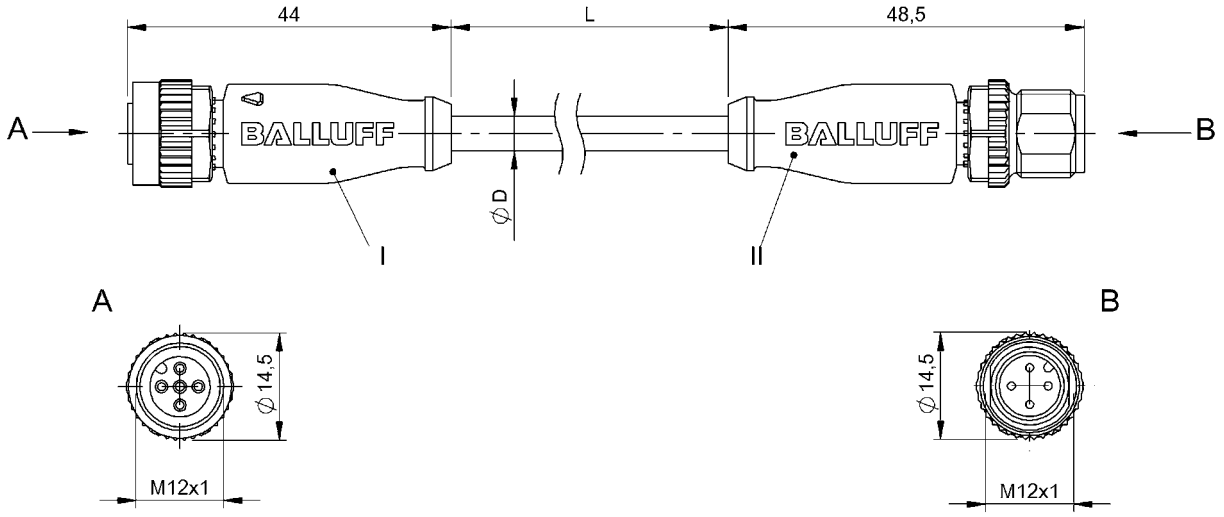

4MT5
(CY.JV CABLE ASSEMBLY)

Electrical connection

Bending radius min., fixed cable	5 x D
Bending radius min., flexible cable	10 x D
Cable	PUR black, 2.00 m, Drag chain compatible
Cable diameter D	4.70 mm ±0.20 mm
Cable, bending cycles min.	5 million
Cable, torsion stress	±180°/m
Conductor cross-section	0.34 mm²
Number of conductors	4
Number of pins	5/4
System	Molded/Molded

Electrical data

Horizontal travel permitted, drag chain	5 m
Rated current (40 °C)	4.0 A
Vertical travel permitted, drag chain	5 m

Environmental conditions

Cable temperatur, drag chain	-25…60 °C
Cable temperature, fixed routing	-50…90 °C
Cable temperature, flexible routing	-25…90 °C
Protection type IEC 60529	IP68 /IP68

Functional safety

Cable temperature UL max., fixed routing	80 °C
Cable temperature UL max., flexible routing	80 °C

General data

Approval/Conformity	cULus LISTED

Material

Material contact carrier	PUR/PUR
Material contacts	Bronze/Brass
Material cover nut	Die-cast zinc/Die-cast zinc
Material grip	PUR/PUR

Mechanical data

Acceleration max., drag chain	5 m/s²
Tightening torque pigtail	0.6 Nm/0.6 Nm
Traverse speed max., drag chain	200 m/min

Remarks

Enclosure rating per IEC 60529, only in screwed state with the associated mating piece.
Cable construction acc. to UL-AWM Style 20549
Halogen-free per DIN VDE 0472 Part 815
Silicone-free
Flame-retarding acc. to IEC 60332-2

BCC M415-M414-3A-304-PX0434-020
BCC039M

Connector view

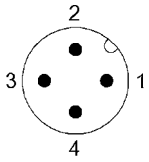

II PIN 1: brown PIN 2: white PIN 3: blue PIN 4: black

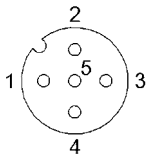

I PIN 1: brown PIN 2: white PIN 3: blue PIN 4: black PIN 5: n.c.

Wiring Diagram

