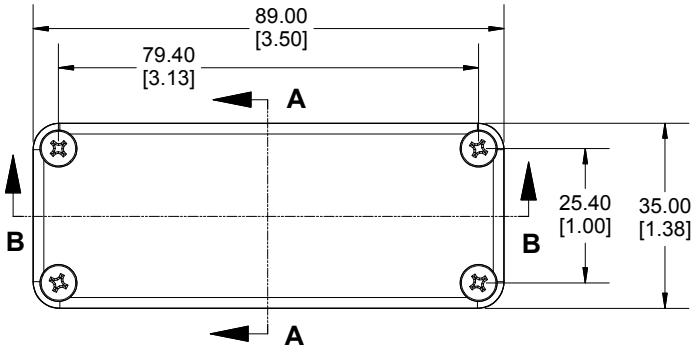


**TOP VIEW**

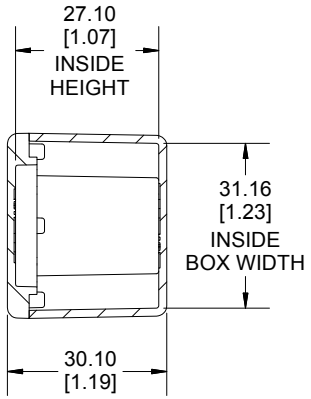


**SECTION A-A**
**END VIEW**

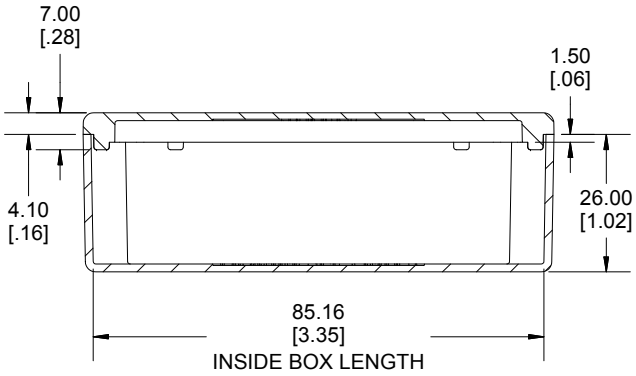


**SECTION B-B**
**SIDE VIEW**

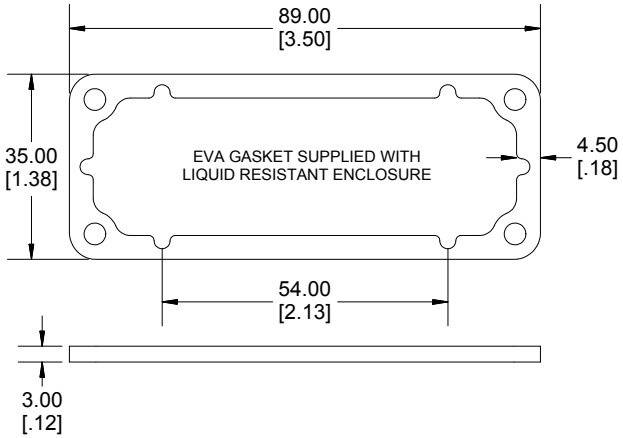


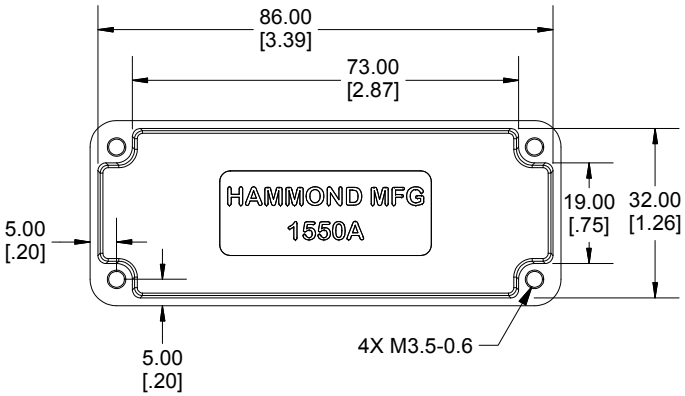


**INSIDE BOX**

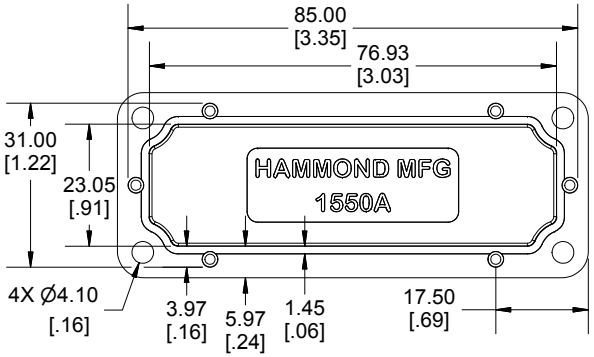


**INSIDE LID**



Enclosures can be Factory Modified ( Milling, Drilling, Printing etc.)
Contact Factory mjm@hammondmfg.com for quotes
Solid models of this enclosure available in STEP or IGES.

| NOTE |
|---|
| Purchased assembly includes box, lid and 4 cover screws. |
| Box and lid are made from Diecast Aluminum Alloy. |
| EVA Gasket supplied with liquid resistant enclosure. |

| PART NUMBERS | |
|---|---|
| **1550A Enclosure** | |
| Natural Finish Enclosure | 1550A |
| Black Textured Enclosure | 1550ABK |
| **1550A Liquid Resistant Enclosure (EVA Gasket)** | |
| Natural Finish Enclosure | 1550WA |
| Black Textured Enclosure | 1550WABK |
| **ACCESSORIES** | |
| **Recommended Torque: 75 ozf.in / 55 cN.m** | |
| **Standard Cover Screws** | |
| Plated Cover Screws (Pkg 100) [M3.5-0.6 x 12mm] | 1550MS100 |
| Black Cover Screws (Pkg 100) [M3.5-0.6 x 12mm] | 1550MS100BK |
| EVA Pre-formed Gasket Black | 1550AEGASKET |
| Silicone Pre-formed Gasket Black | 1550ASGASKET |

**Dimensions:**
mm
[inches]

HAMMOND MANUFACTURING®

# 1550A

**www.hammondmfg.com**