

Inductive sensor

NBB8-18GM50-E2-V1

- 8 mm flush
- Increased operating distance
- Extended temperature range
  -40 ... +85 °C
- Extended operating voltage range
- Flexible use with versatile mounting opportunities

Dimensions

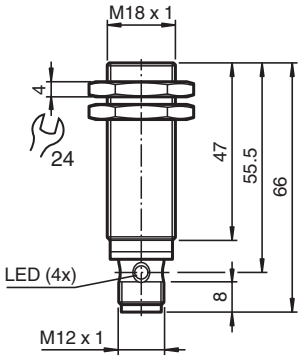

Technical Data

General specifications		
Switching function		Normally open (NO)
Output type		PNP
Rated operating distance	s_n	8 mm
Installation		flush
Output polarity		DC
Assured operating distance	s_a	0 ... 6.48 mm
Actuating element		mild steel, e. g. 1.0037, SR235JR (formerly St37-2) 24 mm x 24 mm x 1 mm
Reduction factor r_{Al}		0.38
Reduction factor r_{Cu}		0.35
Reduction factor r_{304}		0.74
Reduction factor r_{Brass}		0.47
Output type		3-wire
Nominal ratings		
Operating voltage	U_B	5 ... 36 V
Switching frequency	f	0 ... 1350 Hz
Hysteresis	H	typ. 5 %

Release date: 2021-09-01 Date of issue: 2021-09-01 Filename: 326161-0087_eng.pdf

Technical Data

Reverse polarity protection		reverse polarity protected
Short-circuit protection		pulsing
Voltage drop	U_d	≤ 1 V
Operating current	I_L	0 ... 200 mA
Off-state current	I_r	max. 20 µA
No-load supply current	I_0	≤ 10 mA
Time delay before availability	t_v	≤ 10 ms
Switching state indicator		Multihole-LED, yellow
Functional safety related parameters		
$MTTF_d$		1721 a
Mission Time (T_M)		20 a
Diagnostic Coverage (DC)		0 %
Conformity		
PWIS conformity		VDMA 24364-A1/B2/C1/T100°C-W
Compliance with standards and directives		
Standard conformity		
Standards		EN 60947-5-2:2007 EN 60947-5-2/A1:2012 IEC 60947-5-2:2007 IEC 60947-5-2 AMD 1:2012
Approvals and certificates		
EAC conformity		TR CU 020/2011
Protection class		II
Rated insulation voltage	U_i	36 V
Rated impulse withstand voltage	U_{imp}	500 V
UL approval		cULus Listed, General Purpose, Class 2 Power Source
CCC approval		CCC approval / marking not required for products rated ≤36 V
Ambient conditions		
Ambient temperature		-40 ... 85 °C (-40 ... 185 °F)
Storage temperature		-40 ... 85 °C (-40 ... 185 °F)
Mechanical specifications		
Connection type		Connector plug
Housing material		brass , white bronze coated
Sensing face		PBT , green
Degree of protection		IP68
Connector		
Threading		M12 x 1
Number of pins		3
Mass		61 g
Tightening torque		0 ... 30 Nm
General information		
Scope of delivery		2 self locking nuts in scope of delivery

Connection

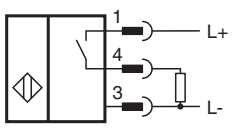

Release date: 2021-09-01 Date of issue: 2021-09-01 Filename: 326161-0087_eng.pdf

Connection Assignment

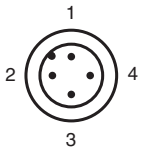

Wire colors in accordance with EN 60947-5-2

1	BN	(brown)
2	WH	(white)
3	BU	(blue)
4	BK	(black)

Accessories

	**BF 18**	Mounting flange, 18 mm
	**BF 18-F**	Plastic mounting adapter, 18 mm
	**MH 01-M18**	Mounting brackets for sensors
	**MH-EXG-18**	Quick mounting bracket with dead stop
	**V1-G-2M-PUR**	Female cordset single-ended M12 straight A-coded, 4-pin, PUR cable grey
	**V1-W-2M-PUR**	Female cordset single-ended M12 angled A-coded, 4-pin, PUR cable grey
	**V1-G-BK2M-PUR-U**	Female cordset single-ended M12 straight A-coded, 4-pin, PUR cable black, UL approved, drag chain suitable, torsion resistant
	**V1-W-BK2M-PUR-U**	Female cordset single-ended M12 angled A-coded, 4-pin, PUR cable black, UL approved, drag chain suitable, torsion resistant
	**V1-G-BK**	Single-ended female cordset, straight, M12, 4-pin, field attachable
	**V1-W-BK**	Single-ended female cordset, angled, M12, 4-pin, field attachable

Release date: 2021-09-01 Date of issue: 2021-09-01 Filename: 326161-0087_eng.pdf