

Actuating rod, plastic rod

Part no. LS-XRR
Article no. 266131

Catalog No. LS-XRR

Delivery programme

Basic function			Operating heads
Part group reference			LS(M)-…
Product range			Actuating rod
Material			Bar: Insulated material
For use with			Basic devices LS(M)…

Notes The operating head can be rotated at 90° intervals to adapt to the specified approach direction.

Approvals

Product Standards	IEC/EN 60947-5; UL 508; CSA-C22.2 No. 14; CE marking
UL File No.	E29184
UL Category Control No.	NKCR
CSA File No.	12528
CSA Class No.	3211-03
North America Certification	UL listed, CSA certified

Technical data ETIM 5.0

Sensors (EG000026) / Drive head for position switches/hinge switches (EC001483)

Electric engineering, automation, process control engineering / Binary sensor technology, safety-related sensor technology / Position switch / Drive head for position switches (ecl@ss8-27-27-06-04 [BAA083008])

Type of control element			Actuating rod

Dimensions

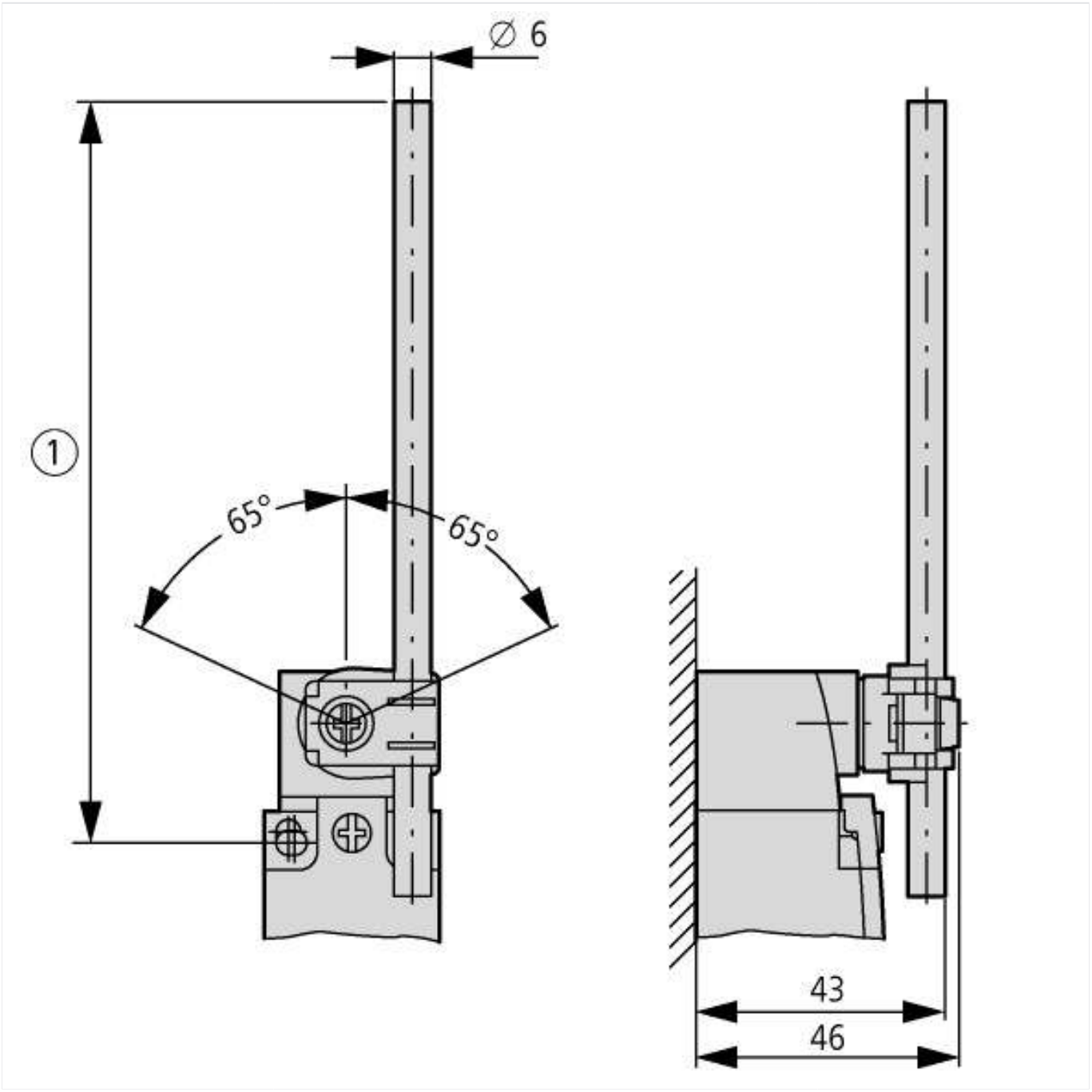

© 07/2014 by Eaton Industries GmbH