TECO Westinghouse

INVERTER

E510

INSTRUCTION MANUAL



230V Class 1~

IP66/NEMA 4X

0.4 - 2.2 kW / 0.5 - 3 HP

230V Class 3~

IP66/NEMA 4X

0.4 - 15 kW / 0.75 - 20 HP

460V Class 3~

IP66/NEMA 4X

0.45- 18.5 kW /1 - 25 HP

- Read all operating instructions before installing, connecting (wiring), operating, servicing, or inspecting the inverter.
- Ensure that this manual is made available to the end user of the inverter.
- Store this manual in a safe, convenient location.
- The manual is subject to change without prior notice.

DOCUMENT - TECO-E510IM
Ver 01: 2015.08

****** STATEMENT ******

Si Desea descargar el manual en español diríjase a este Link: www.tecowestinghouse.com

Table of Contents

Preface (English) 0-1

Preface (Français) 0-2

1 Safety Precautions (English) 1-1

1.1 Before Supplying Power to the Inverter 1-1

1.2 Wiring 1-2

1.3 Before Operation 1-3

1.4 Parameters Setting 1-3

1.5 Operation 1-4

1.6 Maintenance, Inspection and Replacement 1-5

1.7 Disposal of the Inverter 1-5

1 Consignes de sécurité (Français) 1-6

1.1 Avant d'alimenter le disque dur 1-6

1.2 Câblage 1-6

1.3 Avant l'opération 1-7

1.4 Configuration Paramètre 1-7

1.5 Opération 1-8

1.6 Entretien, Inspection et remplacement 1-8

1.7 Mise au rebut du variateur 1-9

2 Model Description 2-1

2.1 Nameplate Data 2-1

2.2 Inverter Models – Motor Power Rating 2-2

3 Environment and Installation 3-1

3.1 Environment 3-1

3.2 Warning Labels 3-2

3.3 Removing the Front Cover and Keypad 3-3
3.4 Inverter Exterior 3-5
3.5 Wire Gauges, Tightening Torque and Short Circuit Rating 3-8
3.6 Wiring Peripheral Power Devices 3-9
3.7 General Wiring Diagram 3-11
3.8 User Terminals 3-12
3.9 Power Terminals 3-15
3.10 Inverter Wiring 3-17
3.11 Input Power and Motor Cable Length 3-19
3.12 Cable Length vs, Carrier Frequency 3-19
3.13 Installing an AC Line Reactor 3-19
3.14 Power Input Wire Size and NFB 3-20
3.15 Control Circuit Wiring 3-20
3.16 Inverter Specifications 3-21
3.17 General Specifications 3-24
3.18 Inverter De-rating Based on Carrier Frequency 3-26
3.19 Inverter Dimensions 3-27

4. Keypad and Programming Functions 4-1
4.1 LED Keypad 4-1
4.2 Parameters 4-8
4.3 Description of Parameters 4-27

5. Check Motor Rotation and Direction 5-1

6. Speed Reference Command Configuration 6-1
6.1 Reference from the Keypad 6-1
6.2 Reference from an Analog Signal (0-10V / 4-20mA) / Speed Pot 6-2
6.3 Reference from Serial Communication RS485 6-4
6.4 Reference from Pulse Input 6-6
6.5 Change Frequency Unit from Hz to rpm 6-7

7. Operation Method Configuration (Run / Stop) 7-1

7.1 Run / Stop from the Keypad 7-1

7.2 Run / Stop from External Switch / Contact or Pushbutton 7-2

7.3 Run / Stop from Serial Communication RS485 7-4

8. Motor and Application Specific Settings 8-1

8.1 Set Motor Nameplate Data 8-1

8.2 Acceleration and Deceleration Time 8-2

8.3 Volt/Hz Curve Modification (Torque Boost) 8-3

8.4 Rapid Stop 8-4

8.5 Forward and Reverse Jog 8-5

8.6 Analog Output Setup 8-6

9. Using PID Control for Constant Flow / Pressure Applications 9-1

9.1 What is PID Control 9-1

9.2 Connect Transducer Feedback Signal 9-3

9.3 Engineering Units 9-4

9.4 Sleep / Wakeup Function 9-5

10 Troubleshooting, Fault Diagnostics and Maintenance 10-1

10.1 General 10-1

10.2 Fault Detection Function 10-1

10.3 General Troubleshooting 10-6

10.4 Routine and Periodic Inspection 10-7

10.5 Routine Maintenance 10-10

Appendix A: UL Instructions A1

Preface (English)

The E510 product is an inverter designed to control a three-phase induction motor. Please read this manual carefully to ensure correct operation, safety and to become familiar with the inverter functions.

The E510 inverter is an electrical / electronic product and must be installed and handled by qualified service personnel.

Improper handling may result in incorrect operation, shorter life cycle, or failure of this product as well as the motor.

All E510 documentation is subject to change without notice. Be sure to obtain the latest editions for use or visit our website at www.tecowestinghouse.com

Available Documentation:

1. E510 Start-up and Installation Manual
2. E510 Instruction Manual

Read this Start-up and Installation Manual in conjunction with E510 Instruction Manual thoroughly before proceeding with installation, connections (wiring), operation, or maintenance and inspection. Ensure you have sound knowledge of the device and familiarize yourself with all safety information and precautions before proceeding to operate the inverter. Read E510 Instruction Manual for detailed description on parameters.

IMPORTANT	**For Advanced Installation, Wiring and Programming of the E510 inverter refer to the E510 Instruction Manual.**

Ensure you have sound knowledge of the inverter and familiarize yourself with all safety information and precautions before proceeding to operate the inverter.

Please pay close attention to the safety precautions indicated by the warning  and caution  symbol.

 **Warning**	Failure to ignore the information indicated by the warning symbol may result in death or serious injury.
 **Caution**	Failure to ignore the information indicated by the caution symbol may result in minor or moderate injury and/or substantial property damage.

Préface (Français)

- Le produit est un lecteur conçu pour commander un moteur à induction triphasé. lire attentivement ce manuel pour garantir le bon fonctionnement, la sécurité et pour se familiariser avec les fonctions d'entraînement.
- Le lecteur est un appareil électrique / électronique et doit être installé et géré par un personnel qualifié
- Une mauvaise manipulation peut entraîner un fonctionnement incorrect, cycle de vie plus court, ou l'échec de ce produit ainsi que le moteur.
- Tous les documents sont sujets à changement sans préavis. Soyez sûr d'obtenir les dernières éditions de l'utilisation ou visitez notre site Web
- Lire le manuel d'instructions avant de procéder à l'installation, les connexions (câblage), le fonctionnement ou l'entretien et l'inspection.
- Vérifiez que vous avez une bonne connaissance de l'entraînement et de vous familiariser avec les consignes de sécurité et les précautions avant de procéder à fonctionner le lecteur.
- prêter attention aux consignes de sécurité indiquées par l'avertissement  et symbole Attention .

Avertissement	ignorer les informations indiquées par le symbole d'avertissement peut entraîner la mort ou des blessures graves.
Attention	ignorer les informations indiquées par le symbole de mise en garde peut entraîner des blessures mineures ou modérées et / ou des dommages matériels importants.

1. Safety Precautions (English)

1.1 Before supplying Power to the Inverter

Warning

The main circuit must be correctly wired. For single phase supply use input terminals (R/L1, T/L3) and for three phase supply use input terminals (L1(L), L2, L3(N)). Terminals T1, T2, T3 must only be used to connect the motor. Connecting the input supply to any of the T1, T2 or T3 terminals will cause damage to the inverter.

Caution

- To avoid the front cover from disengaging or other physical damage, do not carry the inverter by its cover. Support the unit by its heat sink when transporting. Improper handling can damage the inverter or injure personnel, and should be avoided.
- To avoid the risk of fire, do not install the inverter on or near flammable objects. Install on nonflammable objects such as metal surfaces.
- If several inverters are placed inside the same control panel, provide adequate ventilation to maintain the temperature below 40°C/104°F (50°C/122°F without a dust cover) to avoid overheating or fire.
- When removing or installing the digital operator, turn off the power first, and then follow the instructions in this manual to avoid operator error or loss of display caused by faulty connections.

Warning

This product is sold subject to IEC 61800-3. In a domestic environment this product may cause radio interference in which case the user may need to apply corrective measures.

1.2 Wiring

Warning

- Always turn OFF the power supply before attempting inverter installation and wiring of the user terminals.
- Wiring must be performed by a qualified personnel / certified electrician.
- Make sure the inverter is properly grounded. (230V Class: Grounding impedance shall be less than 100Ω. 460V Class: Grounding impedance shall be less than 10Ω.)
- Please check and test emergency stop circuits after wiring. (Installer is responsible for the correct wiring.)
- Never touch any of the input or output power lines directly or allow any input of output power lines to come in contact with the inverter case.
- Do not perform a dielectric voltage withstand test (megger) on the inverter this will result in inverter damage to the semiconductor components.

Caution

- The line voltage applied must comply with the inverter's specified input voltage. (See product nameplate section 2.1)
- Use wire gauge recommendations and torque specifications. (See Wire Gauge and Torque Specification section 3.7)
- Never connect input power to the inverter output terminals T1, T2, T3.
- Do not connect a contactor or switch in series with the inverter and the motor.
- Do not connect a power factor correction capacitor or surge suppressor to the inverter output.
- Ensure the interference generated by the inverter and motor does not affect peripheral devices.

1.3 Before Operation

Warning

- Make sure the inverter capacity matches the parameters 13-00.
- Reduce the carrier frequency (parameter 11-01) If the cable from the inverter to the motor is greater than 80 ft (25m). A high-frequency current can be generated by stray capacitance between the cables and result in an overcurrent trip of the inverter, an increase in leakage current, or an inaccurate current readout.
- Be sure to install all covers before turning on power. Do not remove any of the covers while power to the inverter is on, otherwise electric shock may occur.
- Do not operate switches with wet hands, otherwise electric shock may result.
- Do not touch inverter terminals when energized even if inverter has stopped, otherwise electric shock may result.

1.4 Parameter Setting

Caution

- Do not connect a load to the motor while performing a rotational auto-tune.
- Make sure the motor can freely run and there is sufficient space around the motor when performing a rotational auto-tune.

1.5 Operation

Warning

- Be sure to install all covers before turning on power. Do not remove any of the covers while power to the inverter is on, otherwise electric shock may occur.
- Do not connect or disconnect the motor during operation. This will cause the inverter to trip and may cause damage to the inverter.
- Operations may start suddenly if an alarm or fault is reset with a run command active. Confirm that no run command is active upon resetting the alarm or fault, otherwise accidents may occur.
- Do not operate switches with wet hands, otherwise electric shock may result.
- It provides an independent external hardware emergency switch, which emergently shuts down the inverter output in the case of danger.
- If automatic restart after power recovery (parameter 07-00) is enabled, the inverter will start automatically after power is restored.
- Make sure it is safe to operate the inverter and motor before performing a rotational auto-tune.
- Do not touch inverter terminals when energized even if inverter has stopped, otherwise electric shock may result.
- Do not check signals on circuit boards while the inverter is running.
- After the power is turned off, the cooling fan may continue to run for some time.

Caution

- Do not touch heat-generating components such as heat sinks and braking resistors.
- Carefully check the performance of motor or machine before operating at high speed, otherwise Injury may result.
- Note the parameter settings related to the braking unit when applicable.
- Do not use the inverter braking function for mechanical holding, otherwise injury may result.
- Do not check signals on circuit boards while the inverter is running.

1.6 Maintenance, Inspection and Replacement

Warning

- Wait a minimum of five minutes after power has been turned OFF before starting an inspection. Also confirm that the charge light is OFF and that the DC bus voltage has dropped below 25Vdc.
- Never touch high voltage terminals in the inverter.
- Make sure power to the inverter is disconnected before disassembling the inverter.
- Only authorized personnel should perform maintenance, inspection, and replacement operations. (Take off metal jewelry such as watches and rings and use insulated tools.)

Caution

- The Inverter can be used in an environment with a temperature range from 14° -104°F (-10-40°C) and relative humidity of 95% non-condensing.
- The inverter must be operated in a dust, gas, mist and moisture free environment.

1.7 Disposal of the Inverter

Caution

- Please dispose of this unit with care as an industrial waste and according to your required local regulations.
- The capacitors of inverter main circuit and printed circuit board are considered as hazardous waste and must not be burned.
- The Plastic enclosure and parts of the inverter such as the top cover board will release harmful gases if burned.

1. Consignes de sécurité (Français)

1.1 Avant d'alimenter le disque dur

Avertissement

- Le circuit principal doit être correctement câblée. Pour les terminaux monophasés d'approvisionnement de l'utilisation des intrants (R/L1, T/L3) et de trois bornes d'entrée de l'utilisation de l'offre de phase (R/L1, S/L2, T/L3). U/T1, V/T2, W/T3 ne doivent être utilisés pour connecter le moteur. Raccordement de l'alimentation d'entrée à l'un des U/T1, V/T2 W/T3 ou bornes risque d'endommager le lecteur.

Attention

- Pour éviter que le couvercle ne se désengage ou de tout autre dommage physique, ne portez pas le lecteur par son couverture. Soutenir le groupe par son dissipateur de chaleur lors du transport. Une mauvaise manipulation peut endommager le lecteur ou blesser le personnel, et doit être évitée.
- Pour éviter que les risques d'incendie, ne pas installer le lecteur sur ou à proximité d'objets inflammables. Installer sur des objets ininflammables comme les surfaces métalliques.
- Si plusieurs disques sont placés dans le même panneau de contrôle, fournir une ventilation adéquate pour maintenir la température en dessous de 40 ° C/104 ° F (50 ° C/122 ° F sans housse de protection) pour éviter la surchauffe ou incendie.
- Lors d'un retrait ou d'installation de l'opérateur numérique, éteignez-le d'abord, puis de suivre les instructions de ce manuel pour éviter les erreurs de l'opérateur ou de la perte de l'affichage causé par des connexions défectueuses.

Avertissement

- Lors d'un retrait ou d'installation de l'opérateur numérique, éteignez-le d'abord, puis de suivre les instructions de ce manuel pour éviter les erreurs de l'opérateur ou de la perte de l'affichage causé par des connexions défectueuses....

1.2 Câblage

Avertissement

- Coupez toujours l'alimentation électrique avant de procéder à l'installation d'entraînement et le câblage des terminaux utilisateurs.
- Le câblage doit être effectué par un personnel qualifié / électricien certifié.
- Assurez-vous que le lecteur est correctement mis à la terre. (220V Classe: impédance de mise à la terre doit être inférieure à 100Ω Classe 440V:. Impédance de mise à la terre doit être inférieure à 10Ω.)
- vérifier et tester mes circuits d'arrêt d'urgence après le câblage. (L'Installateur est responsable du câblage.)
- Ne touchez jamais de l'entrée ou de lignes électriques de sortie permettant directement ou toute entrée ou de lignes de puissance de sortie à venir en contact avec le boîtier d'entraînement.
- Ne pas effectuer un test de tenue en tension diélectrique (mégohmmètre) sur le disque dur ou cela va entraîner des dommages de lecture pour les composants semi-conducteurs.

Attention

- La tension d'alimentation appliquée doit se conformer à la tension d'entrée spécifiée par le lecteur. (Voir la section signalétique du produit)
- Raccorder la résistance de freinage et de l'unité de freinage sur les bornes assignées.
- Ne pas brancher une résistance de freinage directement sur les bornes CC P (+) et N (-), sinon risque d'incendie.
- Utilisez des recommandations de la jauge de fil et les spécifications de couple. (Voir Wire Gauge et la section de spécification de couple) ◦
- Ne jamais brancher l'alimentation d'entrée aux bornes onduleur de sortie U/T1, V/T2, W/T3.
- Ne pas brancher un contacteur ou interrupteur en série avec le variateur et le moteur.
- Ne branchez pas un facteur condensateur de correction de puissance ou suppresseur de tension à la sortie du variateur ◦
- S'assurer que l'interférence générée par l'entraînement et le moteur n'a pas d'incidence sur les périphériques.

1.3 Avant l'opération

Avertissement

- Assurez-vous que la capacité du disque correspond aux paramètres de notation avant d'alimenter.
- Réduire le paramètre de la fréquence porteuse si le câble du variateur au moteur est supérieure à 80 pi (25 m). Un courant de haute fréquence peut être générée par la capacité parasite entre les câbles et entraîner un déclenchement de surintensité du variateur, une augmentation du courant ou d'une lecture actuelle inexactes.
- Veillez à installer tous les couvercles avant de l'allumer. Ne retirez pas les capots pendant que l'alimentation du lecteur est allumé, un choc électrique peut se produire autrement.
- Ne pas actionner d'interrupteurs avec les mains mouillées, un choc électrique pourrait survenir autrement.
- Ne touchez pas les bornes d'entraînement lorsqu'il est alimenté, même si le lecteur est arrêté, un choc électrique pourrait survenir autrement.

1.4 Configuration Paramètre

Attention

- Ne branchez pas une charge pour le moteur tout en effectuant un auto-tune.
- Assurez-vous que le moteur peut fonctionner librement et il y a suffisamment d'espace autour du moteur lors de l'exécution d'un auto-tune rotation.

1.5 Opération

Avertissement

- Veillez à installer tous les couvercles avant de l'allumer. Ne retirez pas les capots pendant que l'alimentation du lecteur est allumé, un choc électrique peut se produire autrement.
- Ne pas brancher ou débrancher le moteur pendant le fonctionnement. Le variateur pourrai se déclencher et ainsi endommager le lecteur.
- Les opérations peuvent commencer soudainement si une alarme ou un défaut est réarmé avec un ordre de marche active. Assurez-vous qu'un ordre de marche est actif lors de la réinitialisation de l'alarme ou de défaut, autrement des accidents peuvent se produire.
- Ne pas actionner d'interrupteurs avec les mains mouillées, un choc électrique pourrait survenir.
- Un interrupteur d'urgence externe indépendant est fourni, qui s'arrête en urgence vers le bas la sortie de l'onduleur en cas de danger.
- Si le redémarrage automatique après une récupération d'énergie est activée, le variateur démarrera automatiquement après le rétablissement du courant.
- Assurez-vous qu'il est sûr de faire fonctionner le variateur et le moteur avant d'effectuer un auto-tune rotation.
- Ne touchez pas les bornes d'entraînement lorsqu'il est alimenté même si l'onduleur s'est arrêté, un choc électrique pourrait survenir .
- Ne pas contrôler les signaux sur les circuits pendant que le lecteur est en marche.
- Après la mise hors tension, le ventilateur de refroidissement peut continuer à fonctionner pendant un certain temps.

Attention

- Ne touchez pas les composants générant de la chaleur tels que radiateurs et des résistances de freinage.
- Vérifiez soigneusement la performance du moteur ou de la machine avant d'utiliser à grande vitesse, sous peine de blessure.
- Notez les réglages des paramètres liés à l'unité de freinage lorsque applicable.
- Ne pas utiliser la fonction de freinage d'entraînement pour un maintien mécanique, sous peine de blessure.
- Ne pas contrôler les signaux sur les circuits pendant que le lecteur est en marche.

1.6 Entretien, Inspection et remplacement

Avertissement

- Attendre un minimum de 5 minutes après que l'alimentation a été débranchée avant de commencer une inspection. Vérifiez également que le voyant de charge est éteint et que la tension du bus cc a chuté au-dessous de 25Vdc.
- Ne jamais toucher les bornes à haute tension dans le lecteur.
- Assurez-vous que l'alimentation du lecteur est débranché avant de démonter le lecteur.
- Seul le personnel autorisé peuvent faire l'entretien, l'inspection et les opérations de remplacement. (Enlevez les bijoux en métal tels que les montres et les bagues et utiliser des outils isolés.)

Attention

- Le variateur peut être utilisé dans un environnement avec une gamme de température allant de 14 ° -104 ° F (10-40 ° C) et l'humidité relative de 95% sans condensation.
- Le variateur doit être utilisé dans un environnement sans poussière, gaz, vapeur et humidité.

1.7 Mise au rebut du variateur

Attention

- jeter cet appareil avec soin comme un déchet industriel et selon les réglementations locales nécessaires.
- Les condensateurs du circuit principal d'entraînement et circuits imprimés sont considérés comme des déchets dangereux et ne doivent pas être brûlés.
- The Plastic enclosure and parts of the drive such as the top cover board will release harmful gases if burned.

2. Model Description

2.1 Nameplate Data

It is essential to verify the E510 inverter nameplate and make sure that the E510 inverter has the correct rating so it can be used in your application with the proper sized AC motor.

Unpack the E510 inverter and check the following:

(1) The E510 inverter and start-up and installation manual (this document) are contained in the package.
(2) The E510 inverter has not been damaged during transportation there should be no dents or parts missing.
(3) The E510 inverter is the type you ordered. You can check the type and specifications on the main nameplate.
(4) Check that the input voltage range meets the input power requirements.
(5) Ensure that the motor HP matches the motor rating of the inverter.

(1HP = 0.746 kW)

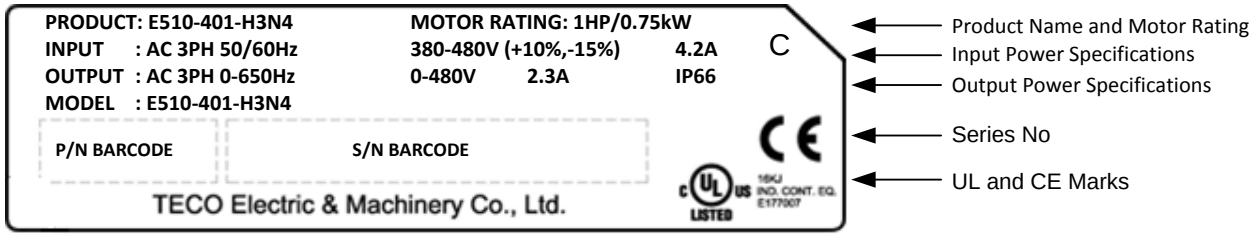

Model Identification

E510 - 2 010 - H 1 F N4S

E510 Inverter Series

Voltage Rating	
2:	230V
4:	460V

Motor Rating	
200V Class	P5: 0.5 HP
	01: 1 HP
	02: 2 HP
	03: 3 HP
	05: 5 HP
	08: 8 HP
	10: 10 HP
	15: 15 HP
	20: 20 HP
400V Class	01: 1 HP
	02: 2 HP
	03: 3 HP
	05: 5 HP
	08: 8 HP
	10: 10 HP
	15: 15 HP
	20: 20 HP
	25: 25 HP

Operator Type	
H:	Standard Type

Input	
1:	1Ph
Blank:	1Ph or 3Ph
3:	3Ph

Noise Filter	
Blank:	No EMC
F:	EMC Filter

Enclosure	
N4:	IP66
N4R	IP66/Built-in VR
N4S	IP66/Built-in VR + Switch

2.2 Inverter Models – Motor Power

IP66 / NEMA 4X Type

Model	Supply voltage (Vac)	HP	(kW)	Filter		VR		Switch		Frame Size
				V	X	V	X	V	X	
E510-2P5-H1FN4S	1 Phase 200~240V +10%-15% 50/60Hz	0.5	0.4	◎		◎		◎		1
E510-201-H1FN4S		1	0.75	◎		◎		◎		1
E510-202-H1FN4S		2	1.5	◎		◎		◎		2
E510-203-H1FN4S		3	2.2	◎		◎		◎		2
E510-2P5-HN4R	1 & 3 Phase 200~240V +10%-15% 50/60Hz	0.5	0.4		◎	◎			◎	1
E510-201-HN4R		1	0.75		◎	◎			◎	1
E510-202-HN4R		2	1.5		◎	◎			◎	2
E510-203-HN4R		3	2.2		◎	◎			◎	2
E510-205-H3N4	3 Phase 200~240V +10%-15% 50/60Hz	5	3.7		◎		◎		◎	2
E510-208-H3N4		7.5	5.5		◎		◎		◎	3
E510-210-H3N4		10	7.5		◎		◎		◎	3
E510-215-H3N4		15	11		◎		◎		◎	3
E510-220-H3N4		20	15		◎		◎		◎	3
E510-401-H3FN4S	3 Phase 380~480V +10%-15% 50/60Hz	1	0.75	◎		◎		◎		1
E510-401-H3N4		1	0.75		◎		◎		◎	1
E510-402-H3FN4S		2	1.5	◎		◎		◎		1
E510-402-H3N4		2	1.5		◎		◎		◎	1
E510-403-H3FN4S		3	2.2	◎		◎		◎		2
E510-403-H3N4		3	2.2		◎		◎		◎	2
E510-405-H3FN4S		5	3.7	◎		◎		◎		2
E510-405-H3N4		5	3.7		◎		◎		◎	2
E510-408-H3FN4S		7.5	5.5	◎		◎		◎		3
E510-408-H3N4		7.5	5.5		◎		◎		◎	3
E510-410-H3FN4S		10	7.5	◎		◎		◎		3
E510-410-H3N4		10	7.5		◎		◎		◎	3
E510-415-H3FN4S		15	11	◎		◎		◎		3
E510-415-H3N4		15	11		◎		◎		◎	3
E510-420-H3N4		20	15		◎		◎		◎	3
E510-425-H3N4		25	18.5		◎		◎		◎	3

V: Built-in

X: None

3. Environment and Installation

3.1 Environment

The environment will directly affect the proper operation and the life span of the inverter. To ensure that the inverter will give maximum service life, please comply with the following environmental conditions:

Protection	
Protection Class	IP66 / NEMA 4X (Depending on models)
Operating Temperature	IP66 / NEMA 4X type: -10°C - +50°C (14-122 °F) If several inverters are placed in the same control panel, provide a heat removal means to maintain ambient temperatures below 40°C
Storage Temperature	-20°C - +60°C (-4 -140 °F)
Humidity:	95% non-condensing Relative humidity 5% to 95%, free of moisture. (Follow IEC60068-2-78 standard)
Altitude:	< 1000m (3,281 ft.)
Installation Site:	Avoid exposure to rain or moisture.
	Avoid direct sunlight.
	Avoid oil mist and salinity.
	Avoid corrosive liquid and gas.
	Avoid dust, lint fibers, and small metal filings.
	Keep away from radioactive and flammable materials.
	Avoid electromagnetic interference (soldering machines, power machines).
	Avoid vibration (stamping, punching machines etc.). Add a vibration-proof pad if the situation cannot be avoided.
Shock	Maximum acceleration: 1G (9.8m/s²), for <20Hz Maximum acceleration: 0.6G (5.88m/s²), for 20 - 50Hz (IEC60068-2-6 standard)

3.2 Warning Labels

Important: Warning information located on the front cover must be read upon installation of the inverter.

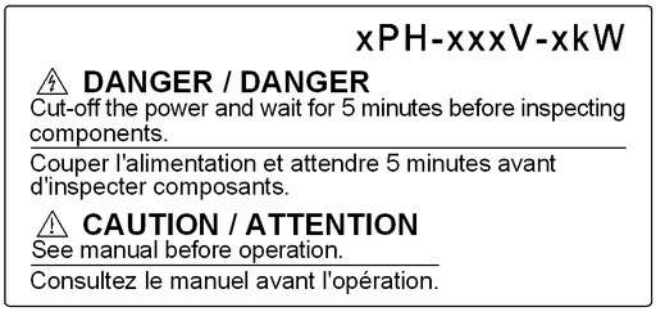



3.3 Removing the Front Cover and Keypad

⚠ Caution
• Before making any wiring connections to the inverter the front cover needs to be removed.

IP66 / NEMA 4X

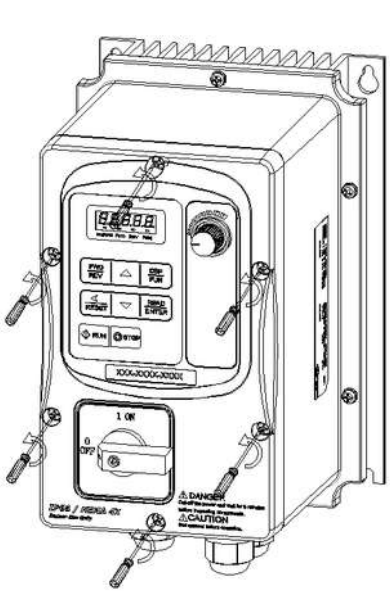

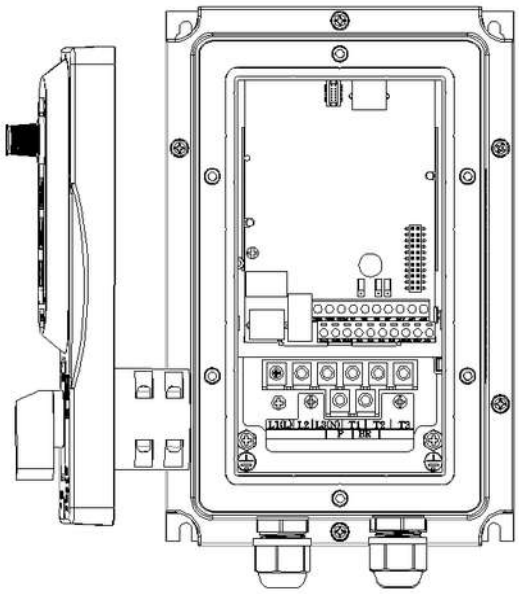

Step 1: Unscrew cover and place cover next to the inverter

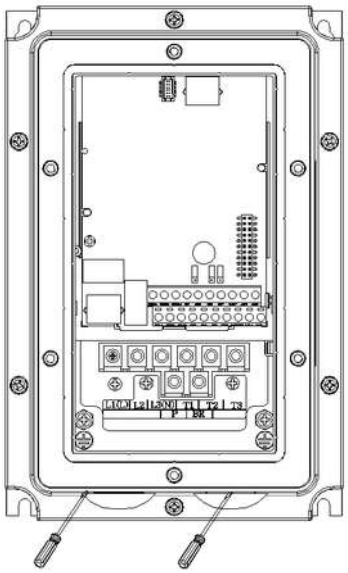

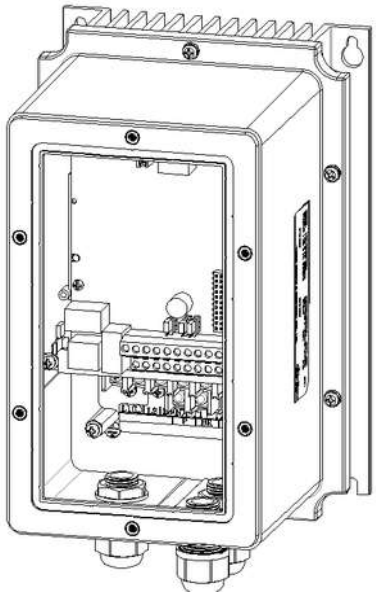

Step 2: Remove the rubber plugs and use the waterproof cable glands provided to connect cables.

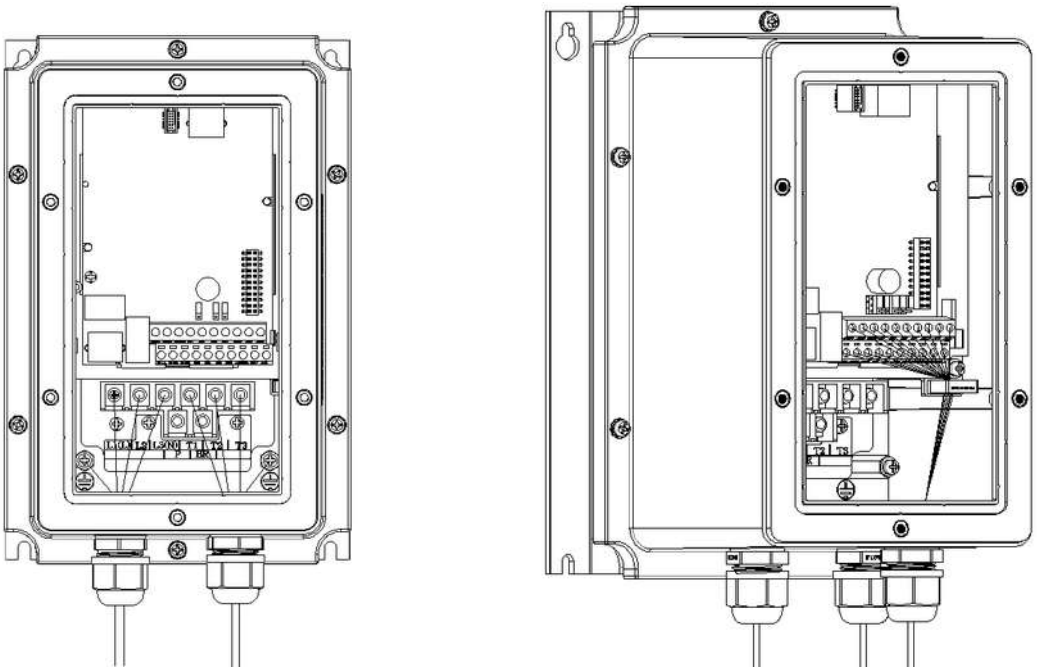

Step 3: Connect power & motor cables through the cable glands to the correct terminals

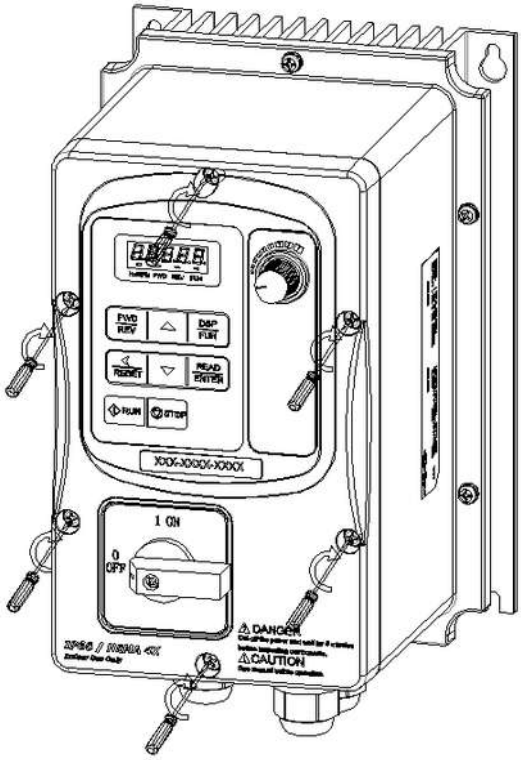

Step 4: Connect power & motor cables through the cable glands to the correct terminals

3.4 Inverter Exterior

IP66/NEMA4X

(a) Single/Three phase: 230V 0.5~1HP
Single phase: 230V 0.5~1HP
Three phase: 230V 2HP; 460V 1~2HP

E510-Frame 1 (IP66/NEMA 4X With/Without VR and disconnect switches depending on the model)

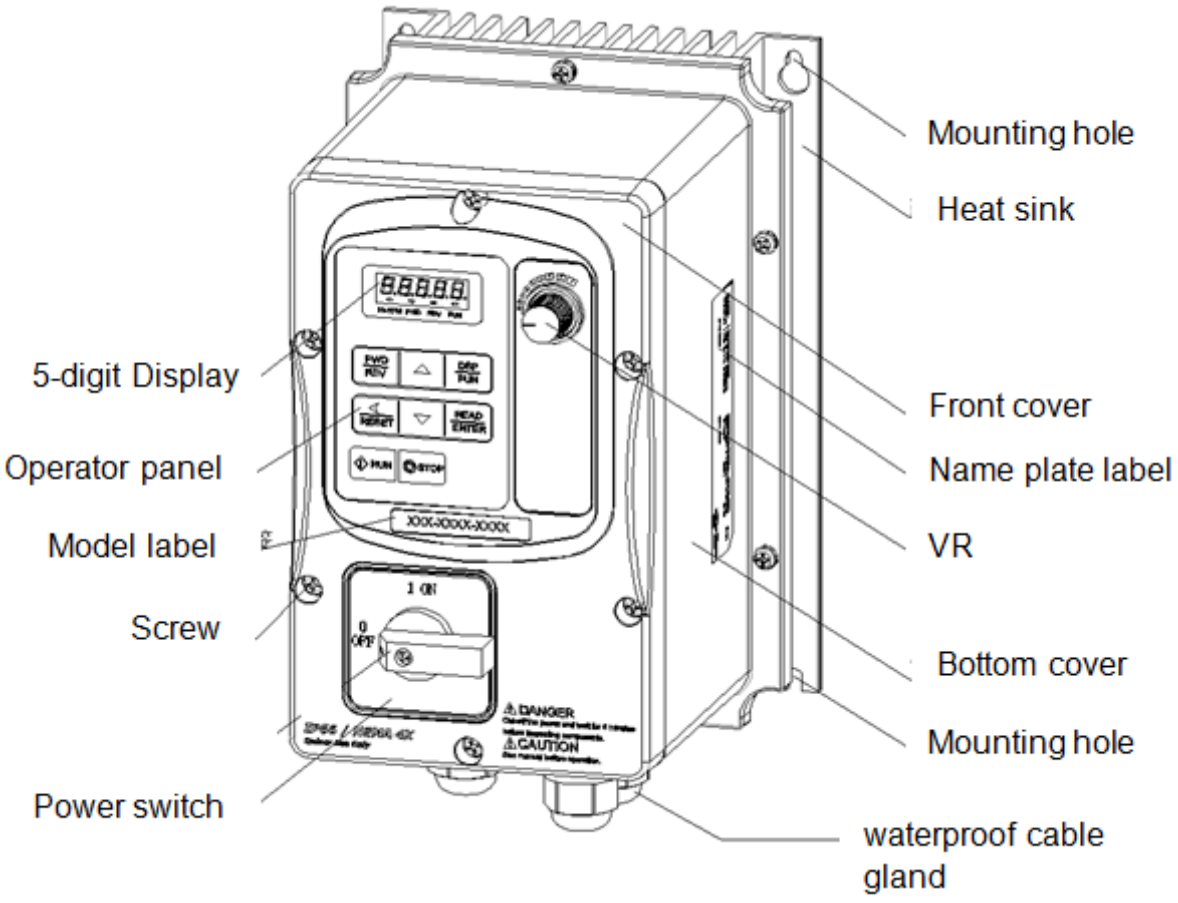

(b) Single/Three phase: 230V 2~3HP
Single phase: 230V 2~3HP
Three phase: 230V 5HP; 460V 3~5HP

E510-Frame 2 (IP66/NEMA 4X With/Without VR and disconnect switches depending on the model)

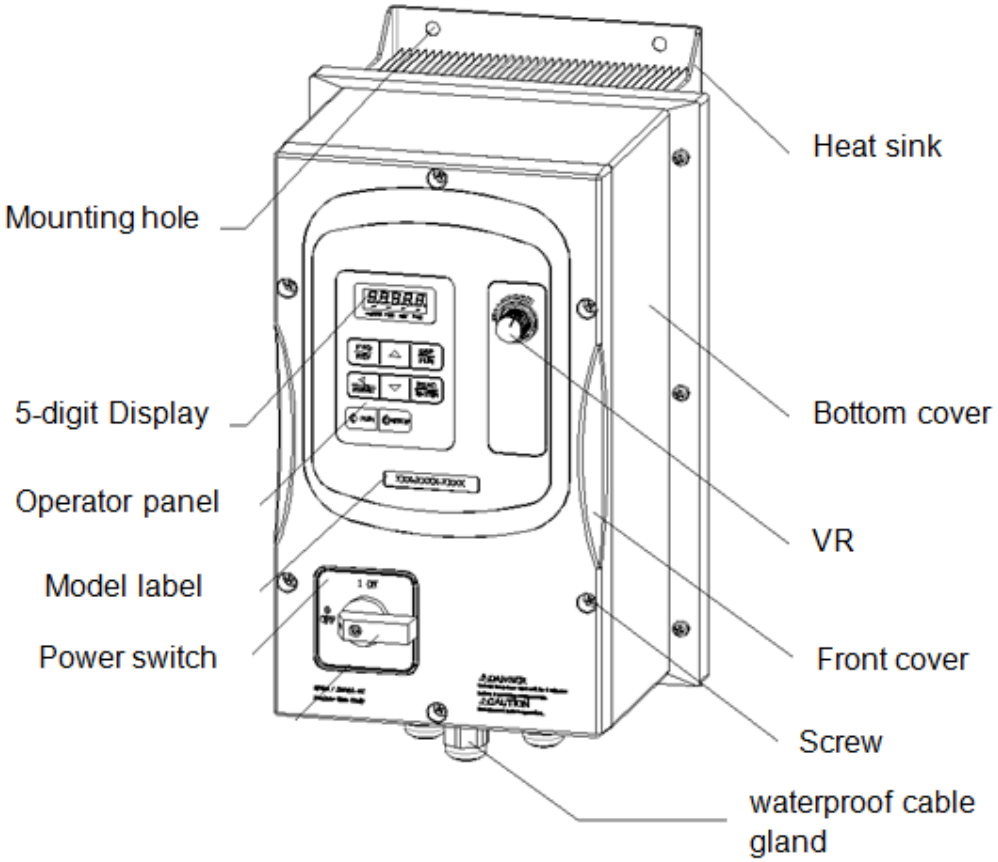

(c) Three phase: 230V 7.5~20HP; 460V 7.5~25HP

E510-Frame 3 (IP66/NEMA 4X With/Without VR and disconnect switches depending on the model)

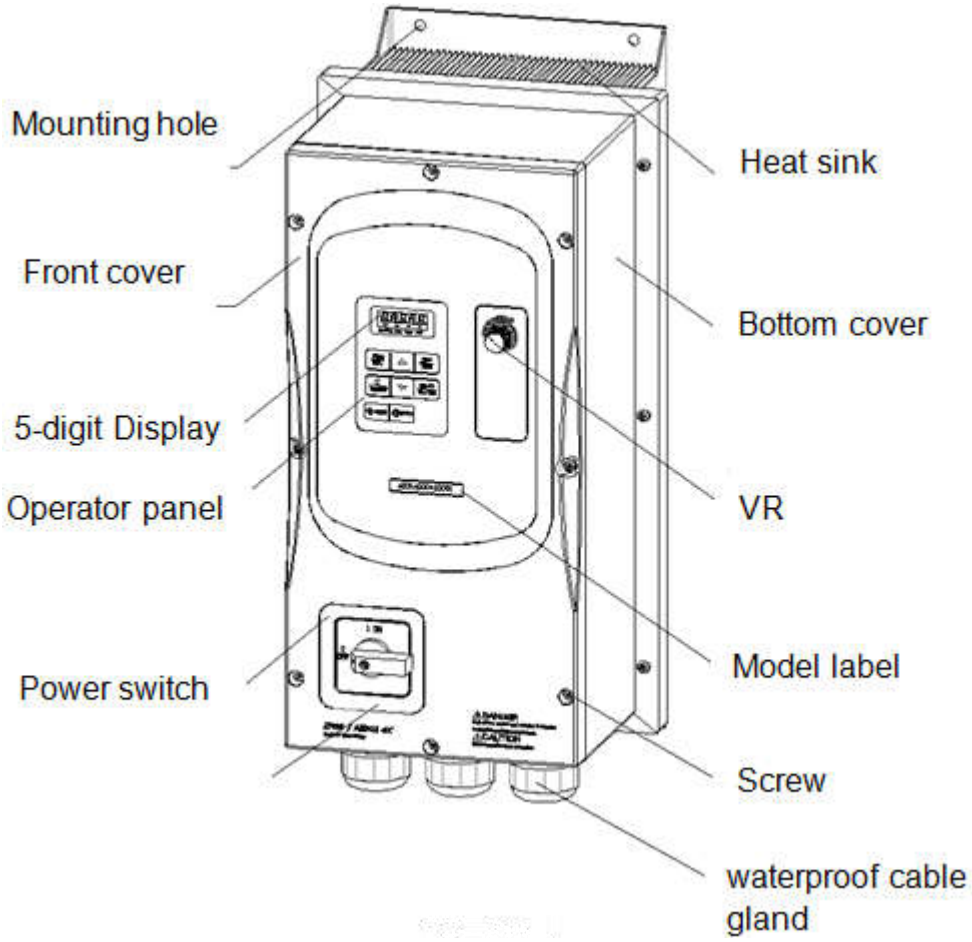

3.5 Wire Gauges, Tightening Torque, Terminal and Short Circuit Ratings.

To comply with UL standards, use UL approved copper wires (rated 75° C) and round crimp terminals (UL Listed products) as shown in table below when connecting to the main circuit terminals.

Model	TM1					TM2				
	Cable Size		Tightening torque			Cable Size		Tightening torque		
	AWG	mm²	kgf.cm	lbf.in	Nm	AWG	mm²	kgf.cm	lbf.in	Nm
Frame1	20~12	0.52~3.33	10.20	0.006	1.0	26~14	0.13~2.08	8.16	0.005	0.8
Frame2	18~8	0.81~8.37	18.35	0.010	1.8					
Frame3	14~6	2.08~13.30	24.47	0.014	2.4					
Frame4	4~3	21.15~26.67								

Terminals Electrical Rating

Model	Horsepower	Power Specification	Voltage (Volt)	Current(A)
Frame1	0.5/1	200V~240V	600	20
	1/2	380V~480V		
Frame2	2/3/5	200V~240V	600	45
	3/5	380V~480V		
Frame 3/4	7.5/10/15/20	200V~240V	600	65
	7.5/10/15/20/25	380V~480V	600	100

Short circuit rating

Device Rating		Short circuit Rating(A)	Maximum Voltage (Volt)
voltage	HP		
230V	0.5~20	5,000	240
460V	1~25	5,000	480

3.6 Wiring Peripheral Power Devices

Caution

- After power is shut off to the inverter the capacitors will slowly discharge. Do NOT touch and of the inverter circuitry or replace any components until the “CHARGE” indicator is off.
- Do NOT wire or connect/disconnect internal connectors of the inverter when the inverter is powered up or when powered off and the “CHARGE”” indicator is on.
- Do NOT connect inverter output U, V and W to the supply power. This will result in damage to the inverter.
- The inverter must by properly grounded. Use terminal E to connect earth ground and comply with local standards.
- Do NOT perform a dielectric voltage withstand test (Megger) on the inverter this will result in inverter damage to the semiconductor components.
- Do NOT touch any of the components on the inverter control board to prevent damage to the inverter by static electricity.

Caution

- Refer to the recommended wire size table for the appropriate wire to use. The voltage between the power supply and the input of the inverter may not exceed 2%.

  Phase-to-phase voltage drop (V) = $\sqrt{3}$ ×resistance of wire (Ω/km) × length of line m) × current×10^{-3}.
  (km=3280 x feet) / (m=3.28 x feet)

- Reduce the carrier frequency (parameter 11-01) If the cable from the inverter to the motor is greater than 25m (82ft). A high-frequency current can be generated by stray capacitance between the cables and result in an overcurrent trip of the inverter, an increase in leakage current, or an inaccurate current readout.
- To protect peripheral equipment, install fast acting fuses on the input side of the inverter. Refer to section 11.6 for additional information.

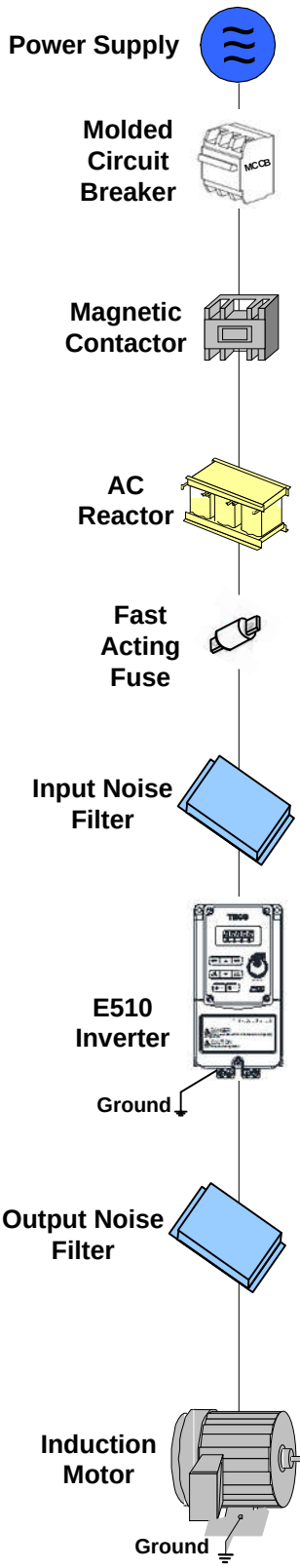

Power supply:

- ⚠ Make sure the correct voltage is applied to avoid damaging the inverter.

Molded-case circuit breaker (MCCB) or fused disconnect:

- A molded-case circuit breaker or fused disconnect must be installed between the AC source and the inverter that conforms to the rated voltage and current of the inverter to control the power and protect the inverter.
- ⚠ Do not use the circuit breaker as the run/stop switch for the inverter.

Ground fault detector / breaker:

- ⚠ Install a ground fault breaker to prevent problems caused by current leakage and to protect personnel. Select current range up to 200mA, and action time up to 0.1 second to prevent high frequency failure.

Magnetic contactor:

- Normal operations do not need a magnetic contactor. When performing functions such as external control and auto restart after power failure, or when using a brake controller, install a magnetic contactor.
- ⚠ Do not use the magnetic contactor as the run/stop switch for the inverter.

AC line reactor for power quality:

- When inverters are supplied by a high capacity power source (> 600KVA), an AC reactor can be connected to improve the power factor.

Install Fast Acting Fuse:

- To protect peripheral equipment, install fast acting fuses in accordance with the specifications in section 11 for peripheral devices.

Input Noise filter:

- A filter must be installed when there are inductive loads affecting the inverter. The inverter meets EN55011 Class A, category C3 when the TECO special filter is used.

Inverter:

- Output terminals T1, T2, and T3 are connected to U, V, and W terminals of the motor. If the motor runs in reverse while the inverter is set to run forward, swap any two terminals connections for T1, T2, and T3.
- ⚠ To avoid damaging the inverter, do not connect the output terminals T1, T2, and T3 to AC input power.
- ⚠ Connect the ground terminal properly. (230V series: Rg <100Ω; 460V series: Rg <10Ω.)

Output Noise filter:

- An output noise filter may reduce system interference and induced noise. See section 11 for peripheral devices.

Motor:

- If the inverter drives multiple motors the output rated current of the inverter must be greater than the total current of all the motors.

3.7 General Wiring Diagram

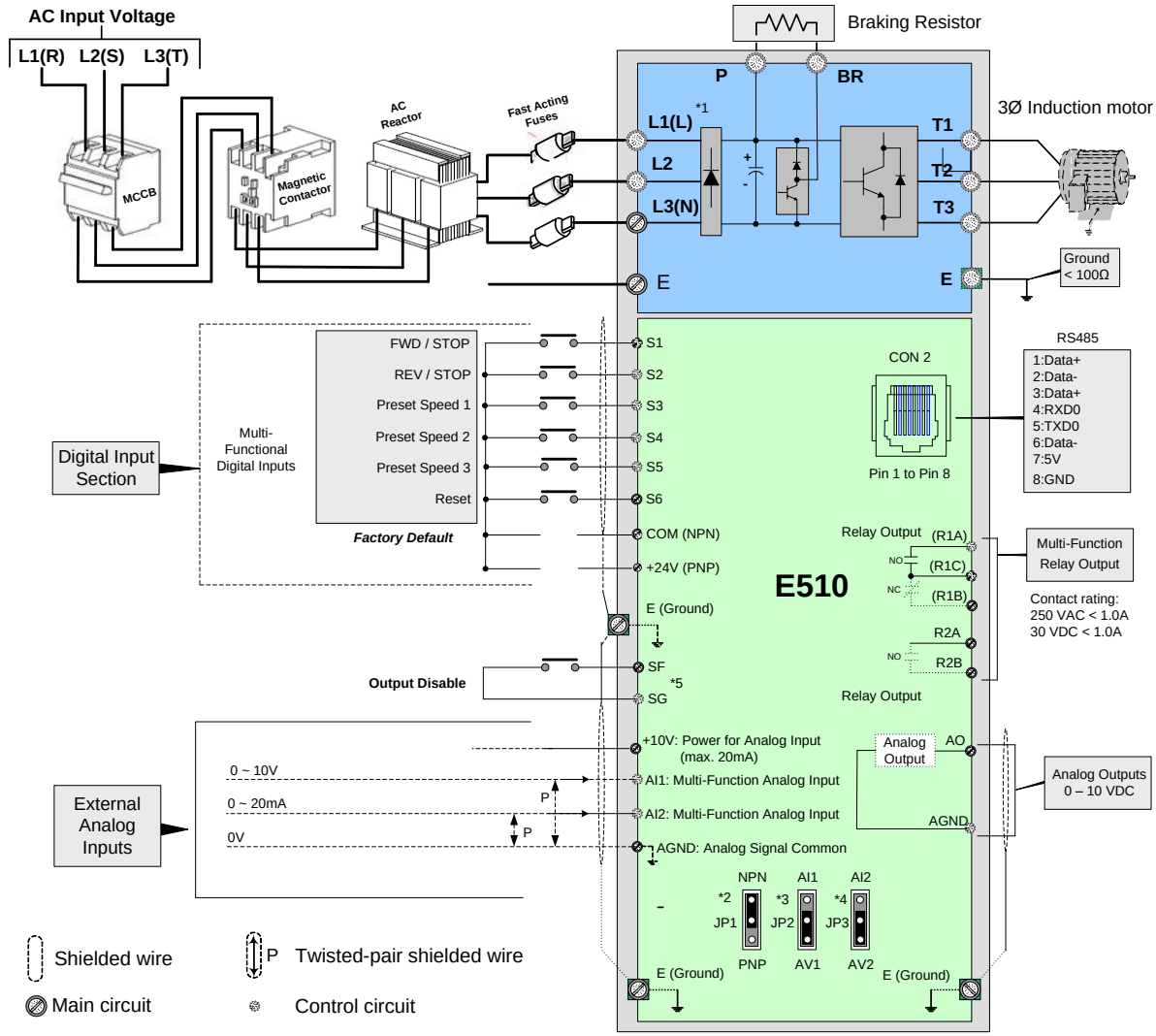

Notes:

*1: Use L1 (L) and L3 (N) for single phase input

*2: Use jumper JP1 to select between Sink (NPN, with 24VG common) or Source (PNP, with +24V common) for multi-function digital input terminals S1~S6.

*3: Use jumper JP2 to switch between voltage and current input for Multi-function analog input 1 (AI1).

*4: Use jumper JP3 to switch between voltage and current input for Multi-function analog input 1 (AI2).

*5: Run Permissive input SF and SG is a normally open input. This input should be open to enable the inverter output. To activate this input place a jumper wire between SF and SG.

3.8 User Terminals (Control Circuit Terminals)

R2A	R2B	COM	S1	S3	S5	SF	24V	AI1	AI2
R1A	R1B	R1C	S2	S4	S6	SG	AGND	10V	AO

Jumper function descriptions

Jumper	Symbol	Function	Signal Reference	Note
JP1	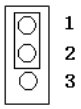	NPN/PNP selectable	NPN Input	Factory default setting
	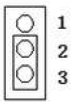		PNP Input	
JP2/JP3	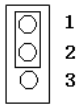	External signal type selection	0~20mA / 4~20mA Analog signal	Set parameters 00-05/00-06 to 2 or 3 (external analog input) to become effective
	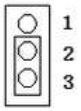		0~10VDC / 2~10VDC Analog signal	

Description of User Terminals

Type	Terminal	Terminal function		Signal level
Digital input signal	**S1**	Forward- Stop (Preset), Multi-function input terminal		24 VDC, 8 mA, Optical coupling isolation (Max, voltage 30 VDC, Input impedance 3.3kΩ)
	S2	Reverse - Stop (Preset), Multi-function input terminal		
	S3	Preset Speed0(5-02),Multi-function input terminal		
	S4	Preset Speed1(5-03), Multi-function input terminal		
	S5	Preset Speed2(5-05), Multi-function input terminal		
	S6	Fault reset input, Multi-function input terminal		
Relay output	**R1A**	NO(Normally open)	Multi-function output: Run, Fault, setting Frequency ,Frequency Reached, Auto Restart, Momentary AC Power Loss, Rapid Stop ,Base Block Stop Mode, Motor Overload Protection, Drive Overload Protection, Over-torque Threshold Level、Preset Current level Reached、Preset Brake Frequency Reached, PID Feedback Signal Loss, Final count value reached, Initial count value reached, PLC Status Indicator ,PLC control…	250VAC/1A(30VDC/1A)
	R1B	NC(Normally closed)		
	R1C	COMMON		
	R2A			
	R2B			
24VPower supply	**COM**	Digital signal common terminal (JP1 Switching NPN position)		±15%,Max output current 60mA
	24V	Digital signal common terminal (JP1 Switching PNP position)		
The analog input signal	**10V**	Built in Power for an external speed potentiometer		10V(Max current:20mA)
	AI1	Multifunctional analog input: JP2 selects voltage or current input Voltage: JP2 in AV1 position Current: JP2 in AI1 position		0 ~ 10V,(Max current:20mA) (Input impedance: 153KΩ)
	AI2	Multifunctional analog input: JP3 selects voltage or current input Voltage: JP3 in AV2 position Current: JP3 in AI2 position		0 ~ 10V,0 ~20mA (Input impedance: 153KΩ)
	AGND	The analog common terminal		----
	⏚	Shielding wire connecting terminal (The earth)		----
The analog output signal	**AO**	Multifunctional analog output terminal*3		0 ~10V,(Max current:2mA)
	AGND	The analog common terminal		----
Safety switch	**SF**	Terminal SF is a safety input and can be used to disable drive externally		
	SG			

Notes:

*1:Multi-function digital input can be referred to in this manual.

- Group 03: External Terminals Digital Input / Output Function Group.

*2:Multi-function analog input can be referred to in this manual..

- Group 04 - External Terminal Analog Signal Input (Output) Function Group.

*3:Multi-function analog output can be referred to in this manual.

- Group 04 - External Terminal Analog Signal Input (Output) Function Group.

Caution

- Maximum output current capacity for terminal 12V is 20mA.
- Multi-function analog output AO1 and AO2 are for use for an analog output meter. Do not use these output for feedback control.
- Control board's 24V and ±12V are to be used for internal control only, Do not use the internal power-supply to power external devices.

3.9 Power Terminals

Terminal	230V: 0.5 ~ 20HP 460V: 1 ~ 25HP
L1(L)	Input Power Supply (For single phase use terminals L1(L) and L3(N)
L2	
L3(N)	
P	Braking resistor connection terminal: For use in applications requiring a high inertia load to stop rapidly. (Refer to specifications of the braking resistor).
BR	
T1	Inverter output, connect to U/V/W terminals of motor
T2	
T3	
⏚	Ground terminal

230V: 0.5 ~ 1HP (Single Phase)
230V: 0.5 ~ 1HP (Single/Three Phase)
230V 2HP, 460V 1~2HP (Three Phase)

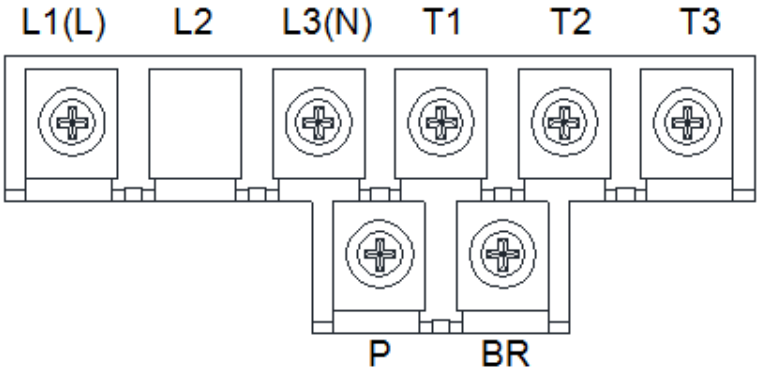

Frame 2

230V: 2 ~ 3HP (Single Phase)

230V: 2 ~ 3HP (Single / Three Phase)

230V: 5HP (Three Phase)

460V: 3 ~ 5HP (Three Phase)

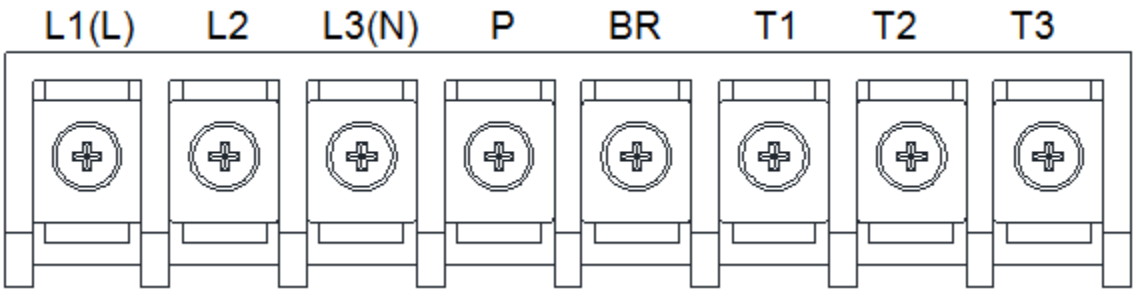

Frame 3 & 4

230V: 7.5 ~ 20HP (Three Phase)

460V: 7.5 ~ 25HP (Three Phase)

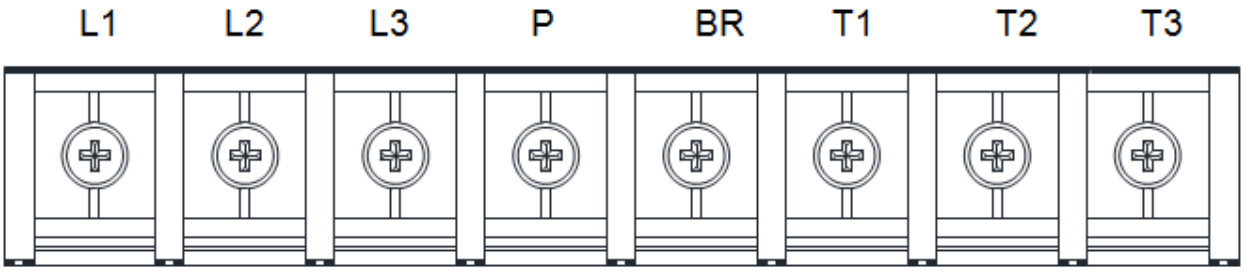

Notes: For wire gauges and screw torques, please refer to the table in section 3.6.

3.10 Inverter Wiring

Wiring Precautions

Danger	• Do **NOT** remove any protective covers or attempt any wiring while input power is applied. Connect all wiring before applying input power. When making wiring changes after power up, remove input power and wait a minimum of five minutes after power has been turned off before starting. Also confirm that the charge lamp is off and that DC voltage between terminals B1/P or (+) and (-) does not exceed 25V, otherwise **electric shock may result.** • Only authorized personnel should work on the equipment. (Take off metal jewelry such as watches and rings and use insulated tools.), otherwise **electric shock or injury may result.**

(A) Power input terminals

1. The Input power supply voltage can be connected in any phase sequence to power input terminals R/L1, S/L2, or T/L3 on the terminal block.
2. DO NOT connect the AC input power source to the output terminals U/T1, V/T2 and. W/T3.
3. Connect the output terminals U/T1, V/T2, W/T3 to motor lead wires U/T1, V/T2, and W/T3, respectively.
4. Check that the motor rotates forward with the forward run source. If it does not, swap any 2 of the output cables to change motor direction.
5. DO NOT connect phase correcting capacitors or LC/RC noise filter to the output circuit.

Example power connections:

Inverter with dedicated power line

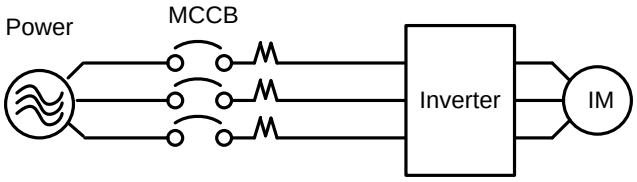

Install a Supply RFI filter or Isolation transformer when the power source is shared with other high power electrical equipment as shown below.

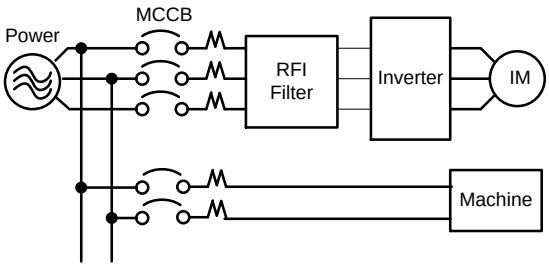

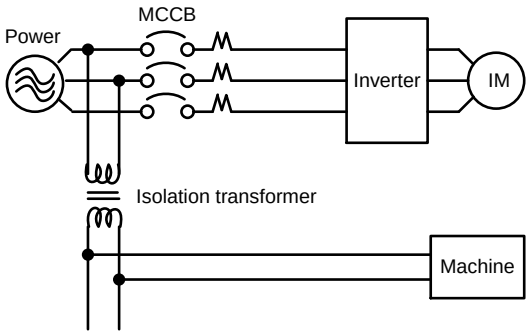

(B) Grounding

1. Connect the ground terminal (E) to ground having a resistance of less than 100Ω.
2. Do not share the ground wire with other devices, such as welding machines or power tools.
3. Always use a ground wire that complies with the local codes and standards for electrical equipment and minimize the length of ground wire.
4. When using more than one inverter, be careful not to loop the ground wire, as shown below in Fig. 3.11.1.

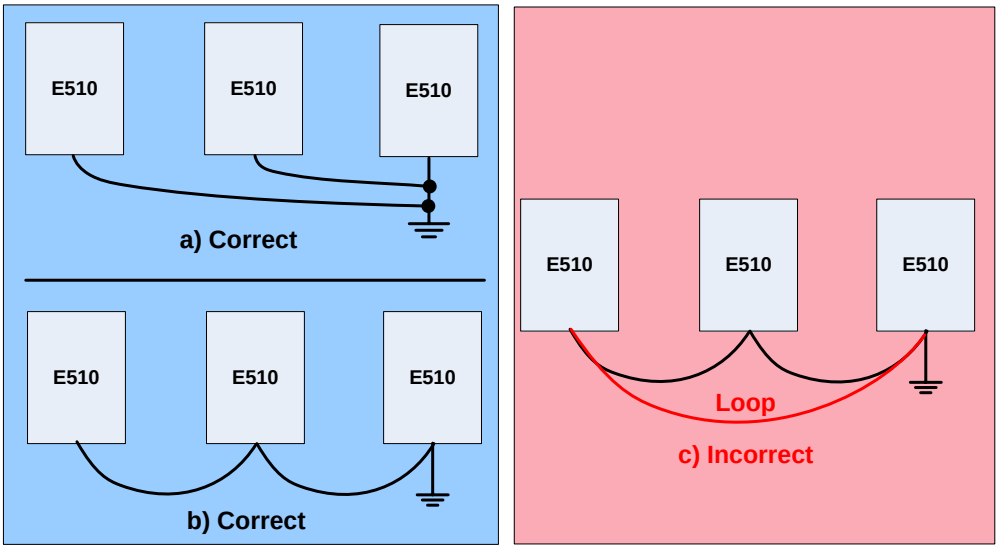

Fig. 3.11.1 Inverter Grounding

3.11 Input Power and Motor Cable Length

The length of the cables between the input power source and /or the motor and inverter can cause a significant phase to phase voltage reduction due to the voltage drop across the cables. The wire size shown in Tables 3.16.1 is based on a maximum voltage drop of 2%. If this value is exceeded, a wire size having larger diameter may be needed. To calculate phase tot phase voltage drop, apply the following formula:

Phase-to-phase voltage drop (V) = $\sqrt{3}$ ×resistance of wire (Ω/km) × length of line m) × current×10^{-3}.

(km=3280 x feet)
(m=3.28 x feet)

3.12 Cable Length vs. Carrier Frequency

The allowable setting of the PWM carrier frequency is also determined by motor cable length and is specified in the following Table 3.13.1.

Table 3.13.1 Cable Length vs. Carrier Frequency

Cable length between the inverter and Motor in m (ft.).	< 30m (100)	30 – 50 (100 – 165)	50 – 100 (166 - 328)	≥ 100 (329)
Recommended carrier frequency allowed Parameter 11-01	16kHz (max)	10 kHz (max)	5 kHz (max)	2 kHz (max)

3.13 Installing an AC Line Reactor

If the inverter is connected to a large-capacity power source (600kVA or more), install an optional AC reactor on the input side of the inverter. This also improves the power factor on the power supply side.

3.14 Power Input Wire Size, and NFB

The following table shows the recommended wire size for each frame of the E510. It depends on the application whether or not to install a circuit breaker. The NFB must be installed between the input power supply and the inverter input (L1 (L), L2, L3 (N)).

Note: When using a ground protection make sure the current setting is above 200mA and trip delay time is 0.1 sec of higher.

Table 3.16.1 Wiring instrument for frame 1 ~ 4

Model	TM1					TM2				
	Cable Size		Tightening torque			Cable Size		Tightening torque		
	AWG	mm²	kgf.cm	lbf.in	Nm	AWG	mm²	kgf.cm	lbf.in	Nm
Frame1	20~12	0.52~3.33	10.20	0.006	1.0	26~14	0.13~2.08	8.16	0.005	0.8
Frame2	18~8	0.81~8.37	18.35	0.010	1.8					
Frame3	14~6	2.08~13.30	24.47	0.014	2.4					
Frame4	4~3	21.15~26.67								

3.15 Control Circuit Wiring

(1) Separate the wiring for control circuit terminals from main circuit wiring for terminals (R/L1, S/L2, T/L3, U/T1, V/T2, W/T3).

(2) Separate the wiring for control circuit terminals R1A-R1B-R1C or R2A, R2B (Relay outputs) from wiring for terminals S1 – S6, A0, AGND, +10V, AI1, AI2 and GND wiring.

(3) Use shielded twisted-pair cables (#24 - #14 AWG / 0.5 -2 mm^2) shown in Fig. 3.17.1 for control circuits to minimize noise problems. The maximum wiring distance should not exceed 50m (165 ft).

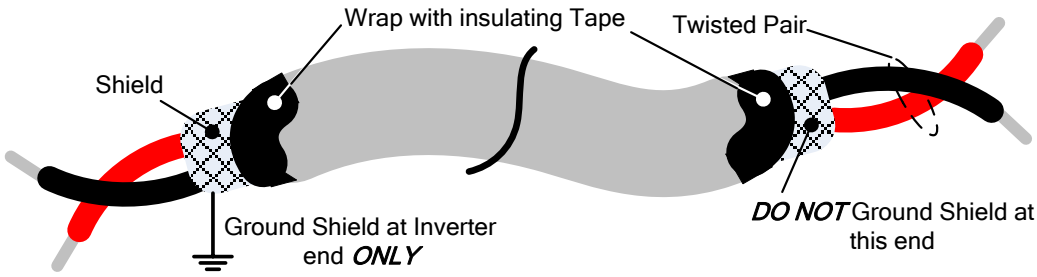

Fig. 3.17.1 Shielded Twisted-Pair

3.16 Inverter Specification

Product Specifications 230V class – Single Phase

Model:E510-□□□- H1F(N4)(S)	**2P5**	**201**	**202**	**203**
Horse power (HP)	0.5	1	2	3
Suitable motor capacity (kW)	0.4	0.75	1.5	2.2
Rated output current (A)	3.1	4.5	7.5	10.5
Rated capacity (KVA)	1.2	1.7	2.90	4.00
Input voltage range(V)	Single Phase:200~240V,50/60Hz			
Allowable voltage fluctuation	+10%-15%			
Output voltage range(V)	Three phase: 0~240V			
Input current (A)*	8.5	12	16	23.9
Inverter net weight (kg)	1.65	1.65	2.5	2.5
Allowable momentary power loss time (S)	2.0	2.0	2.0	2.0
Enclosure	IP66/NEMA4X			

Product Specifications 230V class – Single/Three Phase

Model:E510-□□□- H(N4R)	**2P5**	**201**	**202**	**203**
Horse power (HP)	0.5	1	2	3
Suitable motor capacity (kW)	0.4	0.75	1.5	2.2
Rated output current (A)	3.1	4.5	7.5	10.5
Rated capacity (KVA)	1.2	1.7	2.90	4.00
Input voltage range(V)	Single/Three Phase:200~240V, 50/60Hz			
Allowable voltage fluctuation	+10%-15%			
Output voltage range(V)	Three phase: 0~240V			
Input current (A)*	8.5/4.5	12/6.5	16/11	23.9/12.5
Inverter net weight (kg)	1.6	1.6	2.5	2.5
Allowable momentary power loss time (S)	2.0	2.0	2.0	2.0
Enclosure	IP66/NEMA4X			

Product Specifications 230V class –Three Phase

Model: E510-□□□- H3(N4)	202	205	208	210	215	220
Horse power (HP)	2	5	7.5	10	15	20
Suitable motor capacity (kW)	1.5	3.7	5.5	7.5	11	15
Rated output current (A)	7.5	17.5	26	35	48	64
Rated capacity (KVA)	2.9	6.7	9.9	13.3	20.6	27.4
Input voltage range(V)	Three phase :200~240V,50/60HZ					
Allowable voltage fluctuation	+10%-15%					
Output voltage range(V)	Three phase: 0~240V					
Input current (A)*	11	20.5	33	42	57	70
Inverter net weight (kg)	1.6	2.5	6.5	6.5	10.1	10.4
Allowable momentary power loss time (S)	2.0	2.0	2.0	2.0	2.0	2.0
Enclosure	IP66/NEMA4X					

Product Specifications 460V class –Three Phase

Model:E510-□□□- H3(F)(N4)(S)	401	402	403	405
Horse power (HP)	1	2	3	5
Suitable motor capacity (kW)	0.75	1.5	2.2	3.7
Rated output current (A)	2.3	3.8	5.2	8.8
Rated capacity (KVA)	1.7	2.9	4.0	6.7
Input voltage range(V)	Three phase: 380~480V,50/60Hz			
Allowable voltage fluctuation	+10%-15%			
Output voltage range(V)	Three phase:0~480V			
Input current (A)*	4.2	5.6	7.3	11.6
Inverter net weight (kg)	1.7	1.7	2.5	2.5
Allowable momentary power loss time (S)	2.0	2.0	2.0	2.0
Enclosure	IP66/NEMA4X			

Product Specifications 460V class –Three Phase

Model:E510-□□□- H3(F)(N4)(S)	408	410	415	420	425
Horse power (HP)	7.5	10	15	20	25
Suitable motor capacity (kW)	5.5	7.5	11	15	18.5
Rated output current (A)	13.0	17.5	24	32	40
Rated capacity (KVA)	9.9	13.3	19.1	27.4	34
Input voltage range(V)	Three phase: 380~480V,50/60Hz				
Allowable voltage fluctuation	+10%-15%				
Output voltage range(V)	Three phase: 0~480V				
Input current (A)*	17	23	31	38	48
Inverter net weight (kg)	6.7	6.7	6.7	13.7	13.7
Allowable momentary power loss time (S)	2.0	2.0	2.0	2.0	2.0
Enclosure	IP66/NEMA4X				

Product Specifications 460V class –Three Phase

Model: E510-□□□- H3(F)(PT)	**420**	**425**
Horse power (HP)	20	25
Suitable motor capacity (kW)	15	18.5
Rated output current (A)	32	40
Rated capacity (KVA)	27.4	34
Input voltage range(V)	Three phase: 380～480V (+10%-15%),50/60Hz	
Output voltage range(V)	Three phase: 0～480V	
Input current (A)*	38	48
Allowable momentary power loss time (S)	2.0	2.0
Enclosure	IP66/NEMA4X	

Notes:

*The input current is calculated value at full rated output current.

*N4S 460V series only up to 15HP.

N4: Protection class IP66, without built-in disconnect switches and VR.

N4R: Protection class IP66, with built-in VR, without disconnect switches

N4S: Protection class IP66, with built-in disconnect switches and VR

General Specifications

Item		E510
Control Mode		V/F Control, Vector Control
Frequency	Output Frequency	0.01~650.00Hz
	Starting Torque	150%/1Hz(Vector)
	Speed Control Range	1:50
	Setting resolution	Digital input: 0.01Hz
		Analog input:0.06Hz/60Hz
	Setting	Keypad: Set directly with▲▼ keys or the VR on the keypad
		External Input Terminals: AI1(0/2~10V), AI2(0/4~20mA)input Multifunction input up/down function(Group3)
		Setting frequency by communication method.
	Frequency limit	Lower and upper frequency limits, 3 skip frequency settings.
Run	Operation set	Keypad run, stop button
		External terminals: Multi- operation-mode2 / 3 wire selection Jog operation
		Run signal by communication method.
Main Control Features	V / F curve setting	18 fixed curves and one customized curve
	Carrier frequency	1~16KHz
	Acceleration and deceleration control	2 Acceleration / deceleration time parameters. 4 off S curve parameters.
	Multifunction input	29 functions (refer to description on group3)
	Multifunction output	21 functions (refer to description on group3)
	Multifunction analog output	5 functions (refer to description on group4)
	Main features	Overload Detection,16 preset speeds, Auto-run, Acc/Dec Switch (2 Stages),Main/Alt run Command select, Main/Alt Frequency Command selection, PID control, torque boost, V/F start Frequency, Fault reset, Firemode.
Display	LED	Display: parameter / parameter value / frequency / line speed / DC voltage / output voltage / output current / PID feedback / input and output terminal status / Heat sink temperature / Program Version / Fault Log.
	LED Status Indicator	Run / Stop / Forward / Reverse ,and etc.
Protective Functions	Overload Protection	The relays to protect the motor and the inverter. (150%/1min)
	Over voltage	·220V: >410V ,380V: >820V
	Under Voltage	·220V: <190V , 380V: <380V
	Momentary Power Loss Restart	Inverter auto-restart after a momentary power loss.
	Stall Prevention	Stall prevention for Acceleration/ Deceleration/ Operation.

	Short-circuit output terminal	Electronic Circuit Protection
	Grounding Fault	Electronic Circuit Protection
	Other protection features	Protection for overheating of heat sink, The carrier frequency decreases based on the temperature, Fault output, Reverse prohibit, Prohibit for direct start after power up and error recovery ,parameter lock up
	All frames include brake transistor	
Communication control		Standard built-in RS485 communication (Modbus), One to one or One to many control.
Environment	Operating temperature	-10~50°C (Note1)
	Storage temperature	-20~60°C
	Humidity	95% RH or less (no condensation) (Compliance with IEC 60068 - 2-78)
	Shock	20Hz or less 1G(9.8m/s²)20~50Hz 0.6G(5.88m/s²) (Compliance with IEC 60068 - 2-6)
	Enclosure	IP66/NEMA4X

Note1:

IP66/NEMA 4X Type:
-10~50°C

3.17 Inverter derating based on Carrier Frequency

Frame 1 / 2 / 3 / 4

Single phase: 230V: 0.5~3HP; Single /Three phase: 230V: 0.5~3HP;
Three phase: 230V: 2~20HP, 460V: 1~25HP)

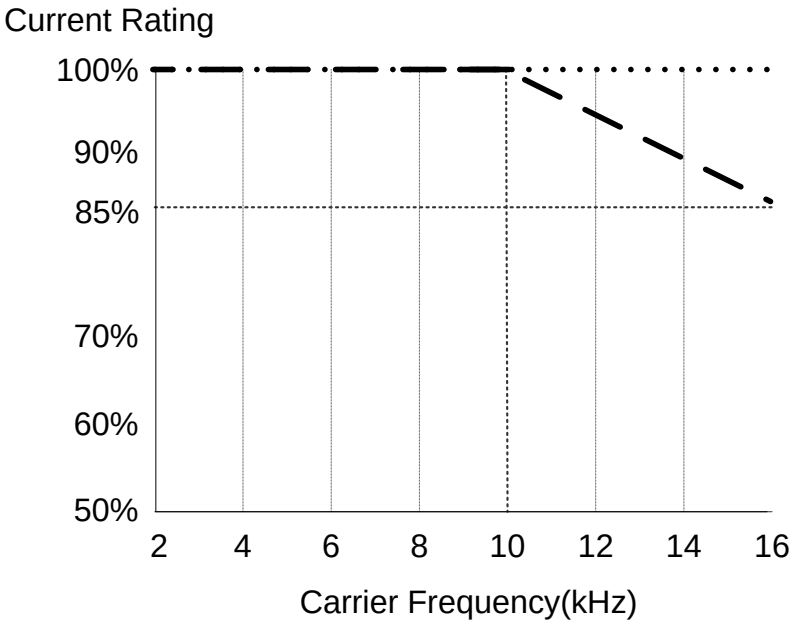

Note: ..... De-rate curve for ambient temperature of 104°F (40°C).

– – – – De-rate curve for ambient temperature of 122°F (50°C).

3.18 Inverter Dimensions

IP66 / NEMA 4X Dimensions

Frame 1 (IP66 / NEMA 4X)

Single phase: 230V 0.5~1HP
Single / Three phase: 230V 0.5~1HP
Three Phase: 230V 2HP; 460V 1~2HP

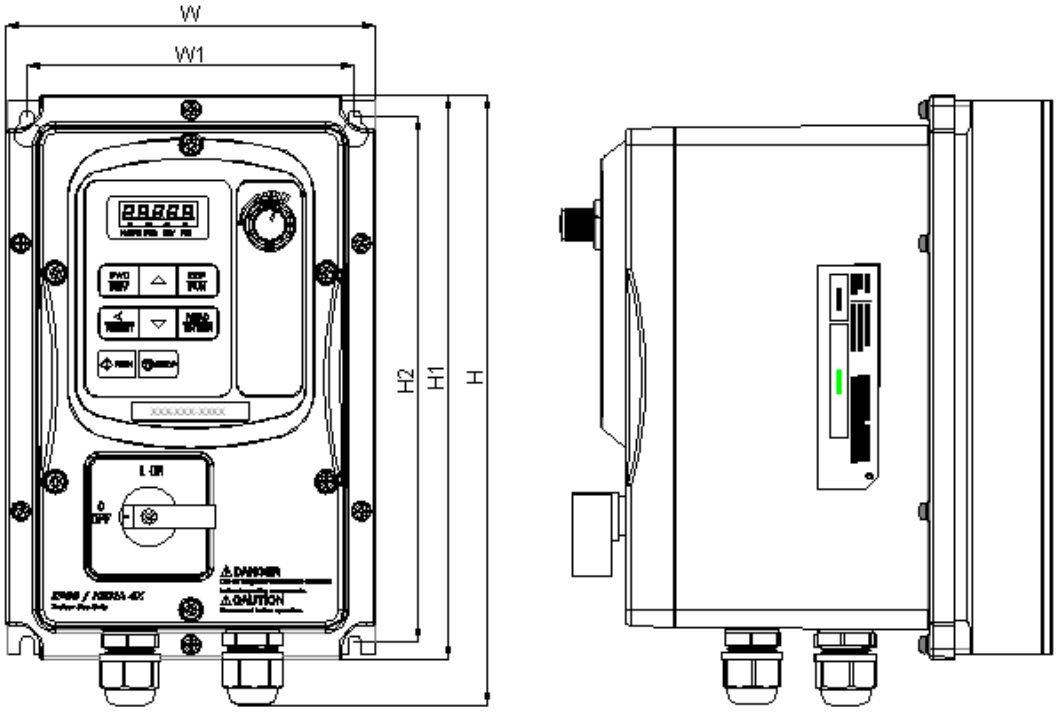

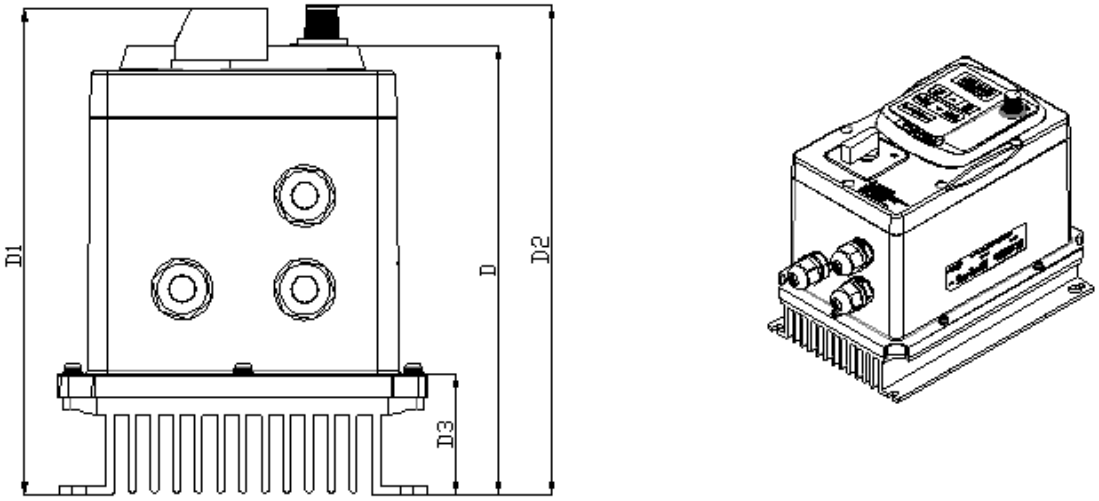

Unit: mm(inch)

Model	Dimensions												N.W (kg)
	W	W1	H	H1	H2	D	D1	D2	D3	Q1	Q2	Q3	
E510-2P5-HN4R	150.8 (5.94)	133.3 (5.25)	248.7 (9.79)	230.2 (9.06)	214.2 (8.43)	183 (7.20)		200 (7.87)	49.5 (1.95)	5.4 (0.21)	5.4 (0.21)	10.6 (0.42)	2.9
E510-2P5-H1FN4S							200 (7.87)	200 (7.87)					
E510-201-HN4R								200 (7.87)					
E510-201-H1FN4S							200 (7.87)	200 (7.87)					
E510-401-H3N4													
E510-401-H3FN4S							200 (7.87)	200 (7.87)					
E510-402-H3N4													
E510-402-H3FN4S							200	200					

Frame 2 (IP66 / NEMA 4X)

Single phase: 230V 2~3HP

Single / Three phase: 230V 2~3HP

Three Phase: 230V 5HP; 460V 3~5HP

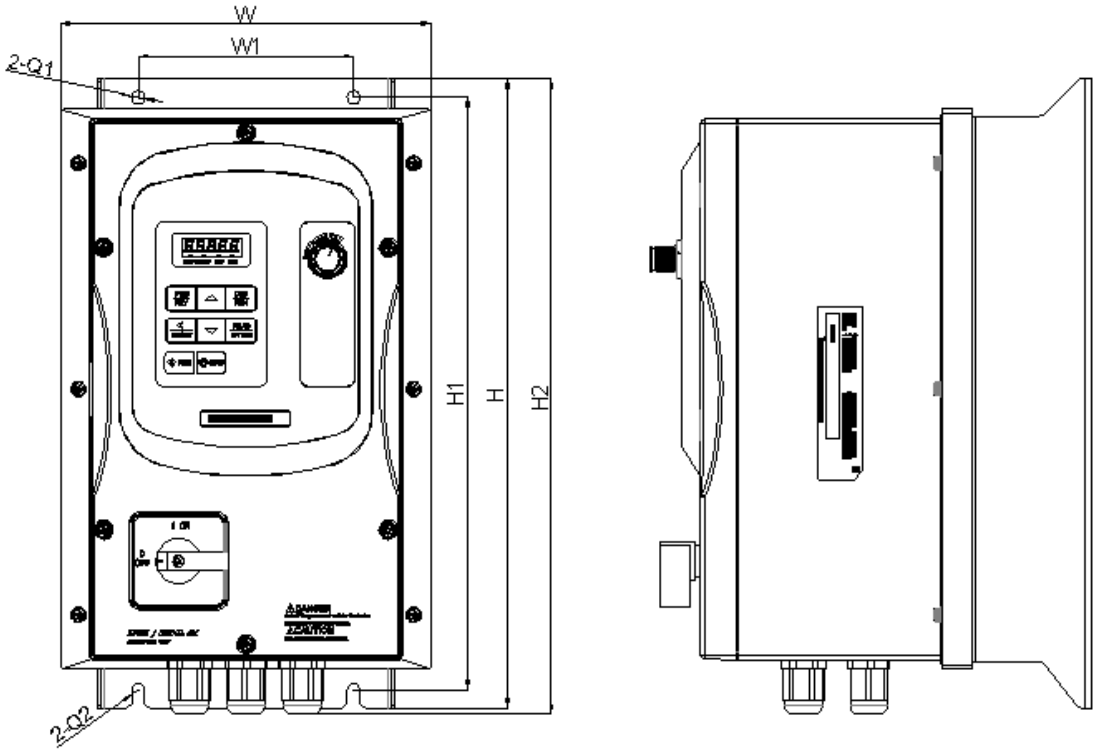

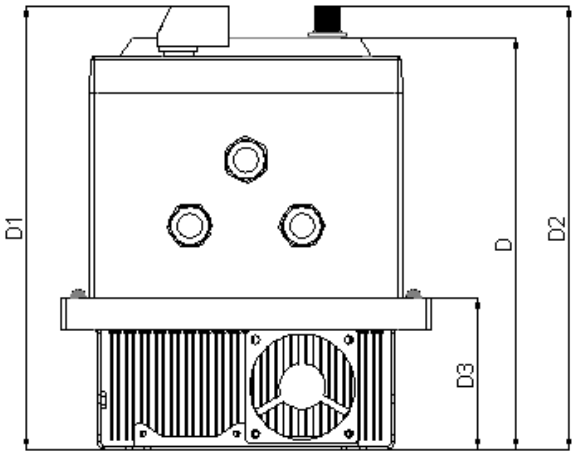

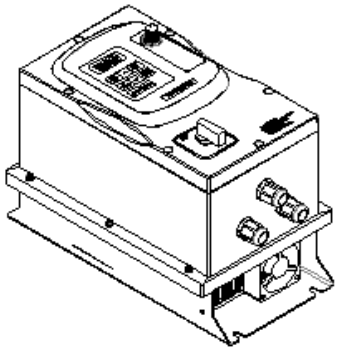

Unit: mm(inch)

Model	Dimensions											N.W (kg)
	W	W1	H	H1	H2	D	D1	D2	D3	Q1	Q2	
E510-202-HN4R	198 (7.80)	115 (4.53)	335 (13.19)	315 (12.40)	337.9 (13.30)	218.4 (8.60)		235.2 (9.26)	79.8 (3.14)	7 (0.28)	7 (0.28)	5.98
E510-202-H1FN4S							235.2 (9.26)	235.2 (9.26)				
E510-203-HN4R								235.2 (9.26)				
E510-203-H1FN4S							235.2 (9.26)	235.2 (9.26)				
E510-205-H3N4												
E510-403-H3N4												
E510-403-H3FN4S							235.2 (9.26)	235.2 (9.26)				
E510-405-H3N4												
E510-405-H3FN4S							235.2 (9.26)	235.2 (9.26)				

Frame 3 (IP66 / NEMA 4X)

Three Phase: 230V 7.5~20HP; 460V 7.5~25HP

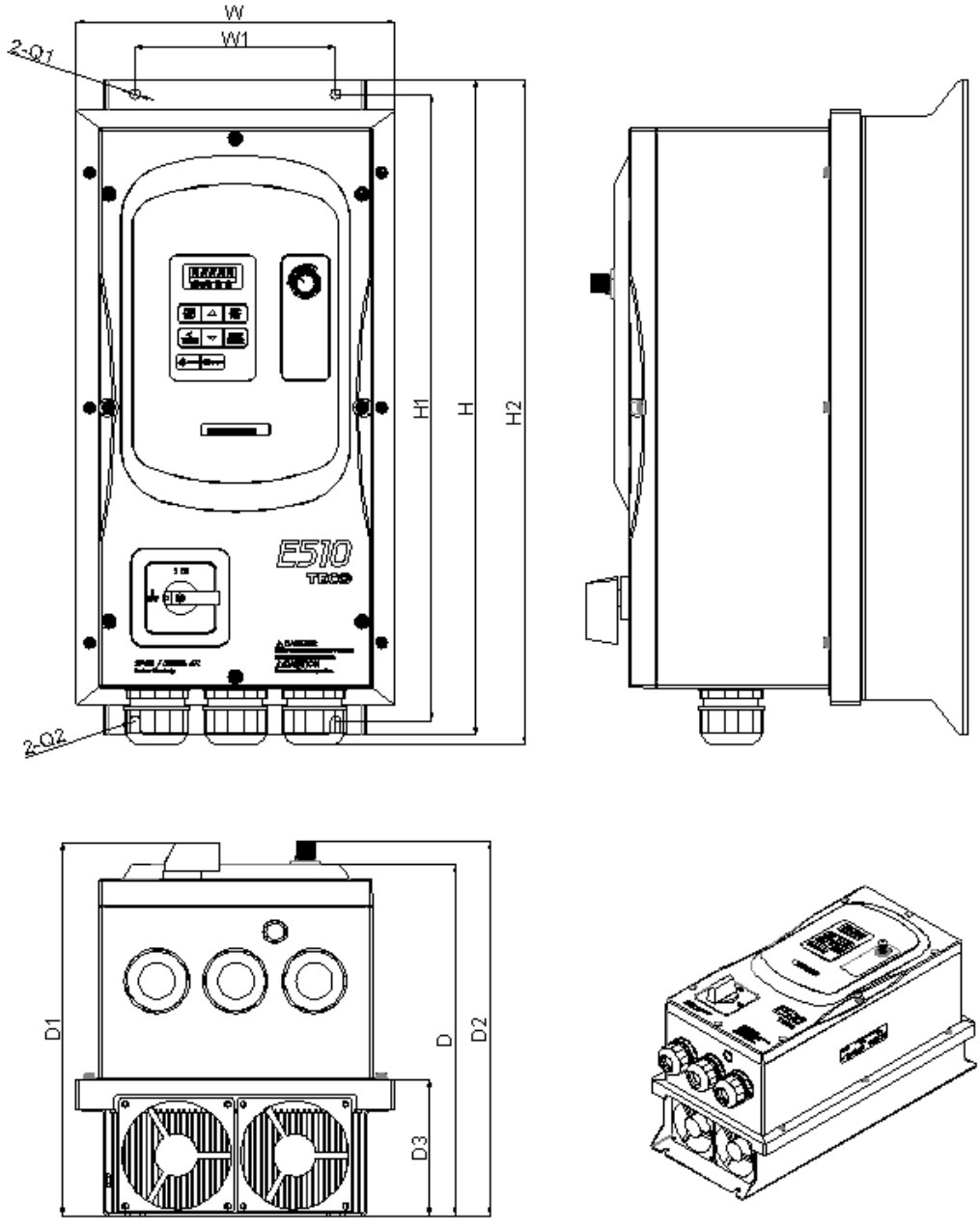

Unit: mm(inch)

Model	Dimensions											N.W (kg)
	W	W1	H	H1	H2	D	D1	D2	D3	Q1	Q2	
E510-208-H3N4	222.8 (8.77)	140 (5.51)	460 (18.11)	440 (17.32)	466.3 (18.36)	246.6 (9.71)			96 (3.78)	7 (0.28)	7 (0.28)	12.68
E510-210-H3N4												
E510-215-H3N4												
E510-220-H3N4												
E510-408-H3N4												
E510-408-H3FN4S							266.5 (10.49)	263.5 (10.37)				
E510-410-H3N4												
E510-410-H3FN4S							266.5 (10.49)	263.5 (10.37)				
E510-415-H3N4												
E510-415-H3FN4S							266.5 (10.49)	263.5 (10.37)				
E510-420-H3N4												
E510-425-H3N4												

4. Keypad and Programming Functions

4.1 LED Keypad

4.1.1 Keypad Display and Keys



DISPLAY	Description
5 Digit LED Display	Monitor inverter signals, view / edit parameters, fault / alarm display.
LED INDICATORS	
Hz/RPM	LED **ON** when frequency or line speed is displayed.
FWD	LED **ON** when inverter is running in forward direction, flashing when stopping.
REV	On when inverter is running in reverse direction, flashing when stopping.
FUN	LED **ON** when parameters are displayed.

KEYS (8)	Description
RUN	RUN Inverter in Local Mode
STOP	STOP Inverter
▲	Parameter navigation Up, Increase parameter or reference value
▼	Parameter navigation down, decrease parameter or reference value
FWD/REV	FWD: Forward Run / REV: Reverse Run
DSP/FUN	DSP: Switch between available display modes FUN: View/Edit parameter value
READ/ENTER	Used to display parameter settings and save parameter changed settings
< / RESET	Use to reset alarms or resettable faults

4.1.2 Display Description

Actual	LED Display	Actual	LED Display	Actual	LED Display	Actual	LED Display
0	0	**A**	A	**L**	L	**Y**	y
1	1	**B**	b	**n**	n	**-**	-
2	2	**C**	C	**o**	o	**°**	o
3	3	**D**	d	**P**	P	**_**	-
4	4	**E**	E	**q**	q	**.**	
5	5	**F**	F	**r**	r		
6	6	**G**	G	**S**	5		
7	7	**H**	H	**t**	t		
8	8	**I**	I	**u**	u		
9	9	**J**	J	**V**	U		

Display output frequency	**Frequency Reference**	**Set Frequency Reference**
LED lights on	LED flashes	Flashing digit
	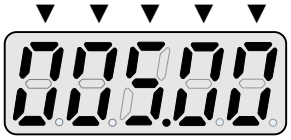	

At power-up the display will show the frequency reference setting, all LEDs are flashing. Press the ▲UP or ▼DOWN key to enter the frequency reference edit mode, use the **◄/ENT** key to select which digit to edit (flashing). Use the ▲UP or ▼DOWN key to modify the value. During run operation the display will show the output frequency.

LED display examples

Seven Segment display	Description
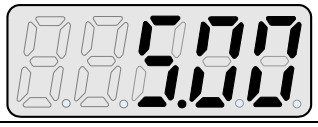	1. Displays the frequency reference at power-up 2. Display the actual output frequency in operation status.
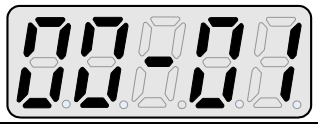	Display parameter code
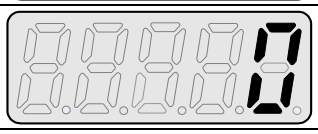	Display the setting value of parameter
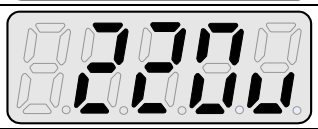	Display input voltage
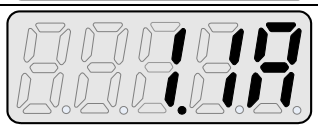	Display inverter current.
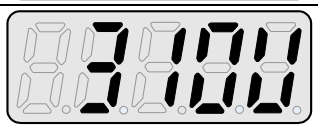	Display DC Bus Voltage
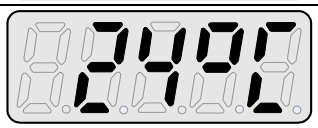	Display temperature
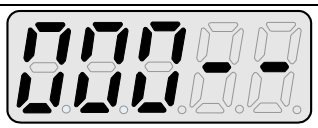	Display PID feedback value. The displayed digit is set by 12-01.
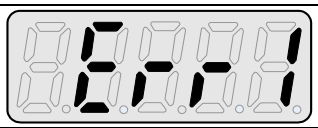	Error display, refer to Chapter 5 Troubleshooting and maintenance
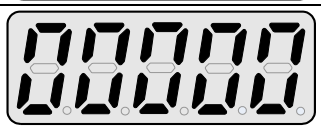	Analog Current / Voltage AI1 / AI2. Range **(0~1000)**

4.1.3 LED Status description

Hz/ RPM LED

State	Description	Hz/RPM LED
Off	Display doesn't show frequency or line speed	
Illuminated	Display shows frequency or line speed	

Forward LED

State	Description	FWD LED
Off	Inverter in reverse direction	
Illuminated	Inverter is running in forward direction	
Flashing	Forward direction active, no run command	

Reverse LED

State	Description	REV LED
Off	Inverter in forward direction	
Illuminated	Inverter is running in reverse direction	
Flashing	Reverse direction active, no run command	

FUN LED

State	Description	FUN LED
Off	Display doesn't show parameter	
Illuminated	Display shows parameter	
Flashing	Firemode Enabled	

4.1.4 Power-Up Monitor

Power Up:

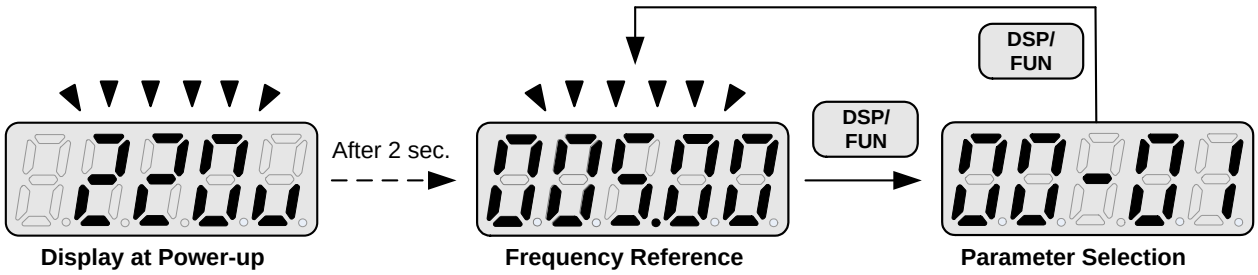

Change Monitor at Power-Up

12-00	Display selection
Range	**Highest bit -> 0 0 0 0 0 <- Lowest bit** The setting range for each bit is **0 ~ 8** from the highest bit to the lowest bit**.** **0:** No display **4:** Temperature **8:** Count value **1:** Output current **5:** PID feedback **2:** Output voltage **6:** AI1 value **3:** DC voltage **7:** AI2 value

Example: 12-00 = 10000

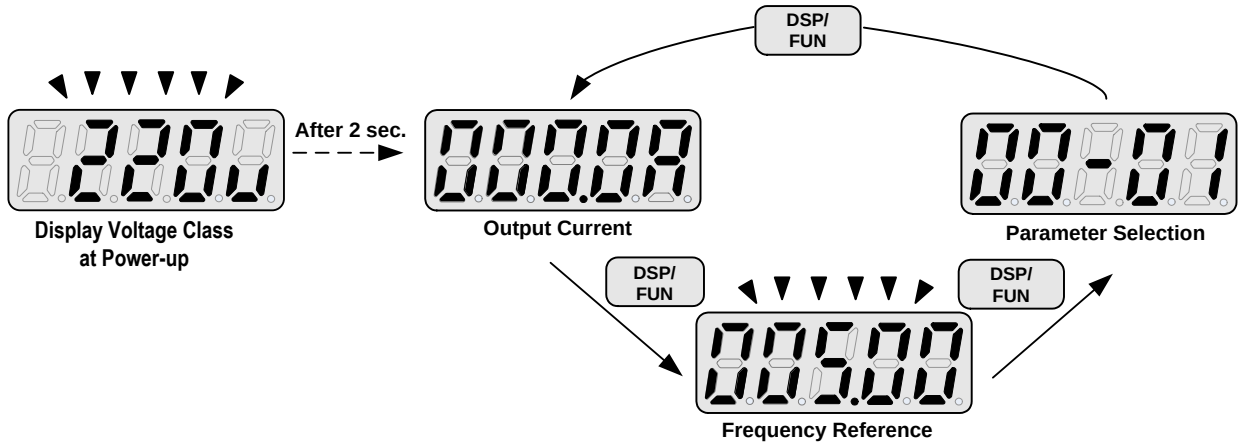

Example: 12-00 = 12345

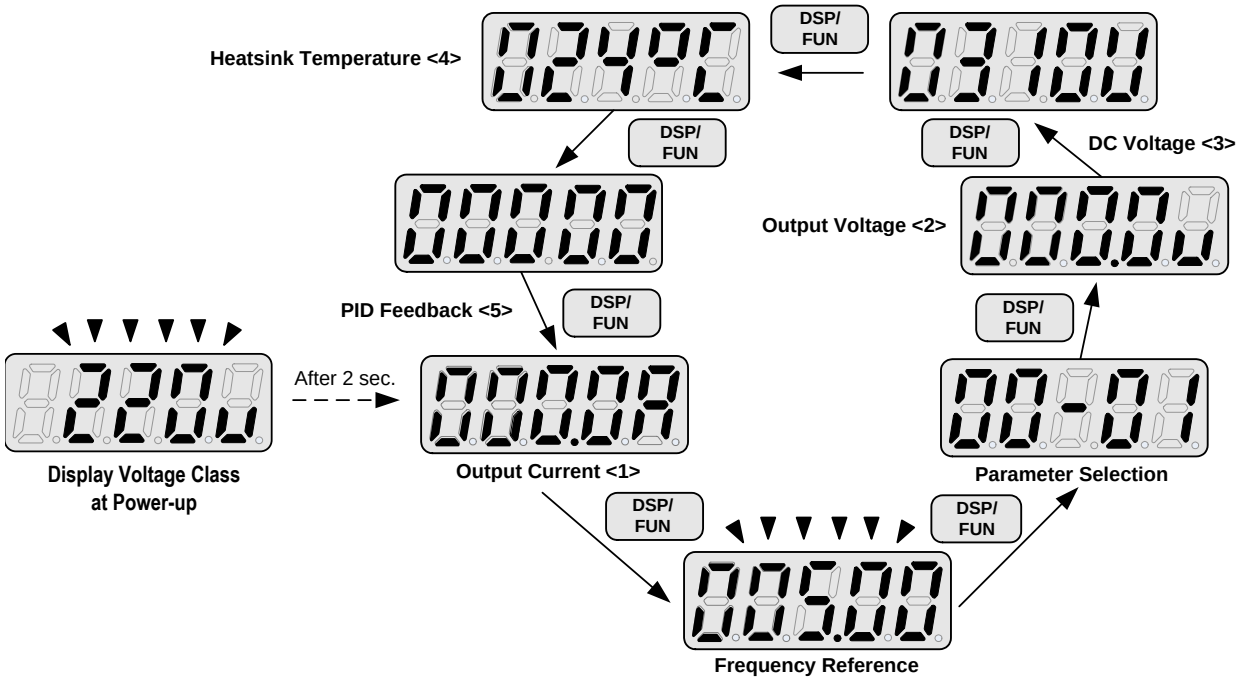

4.1.5 Modifying Parameters / Set Frequency Reference

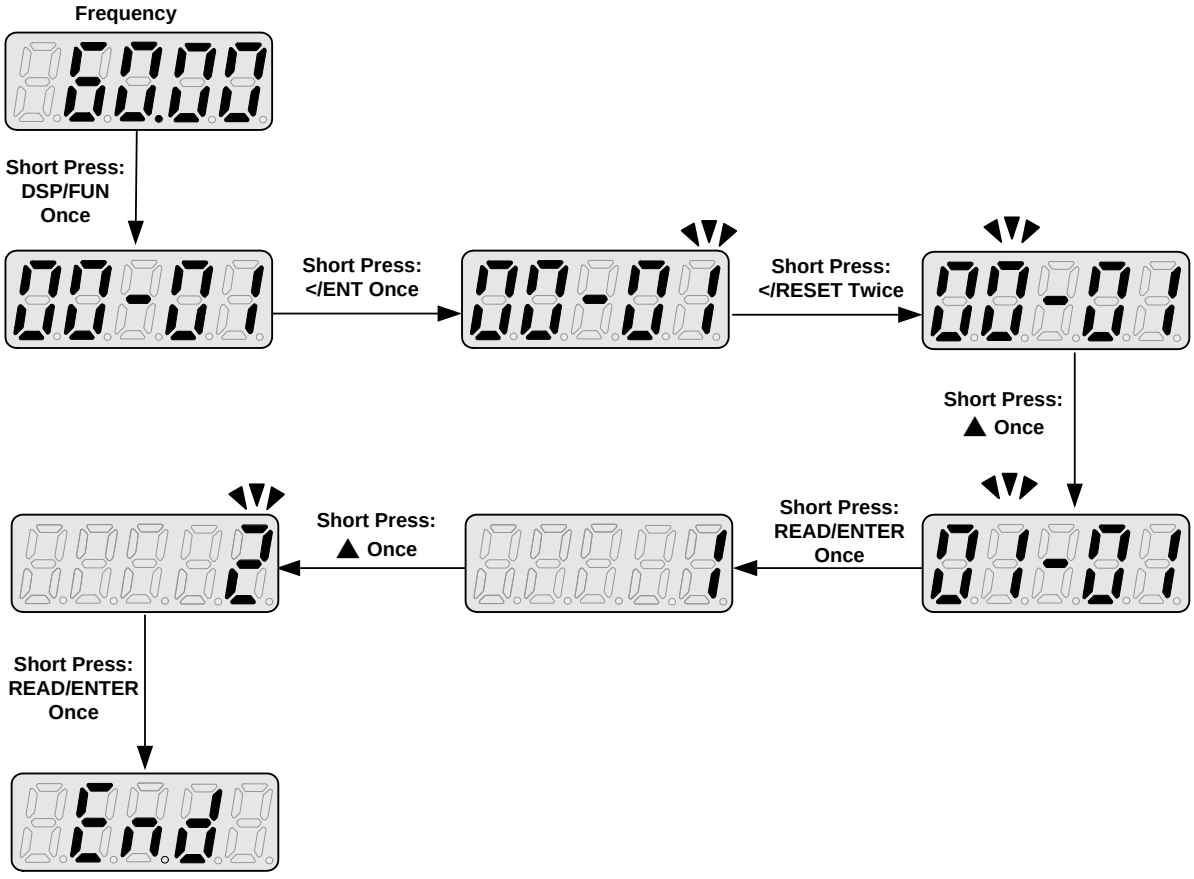

4.1.6 Operation Control

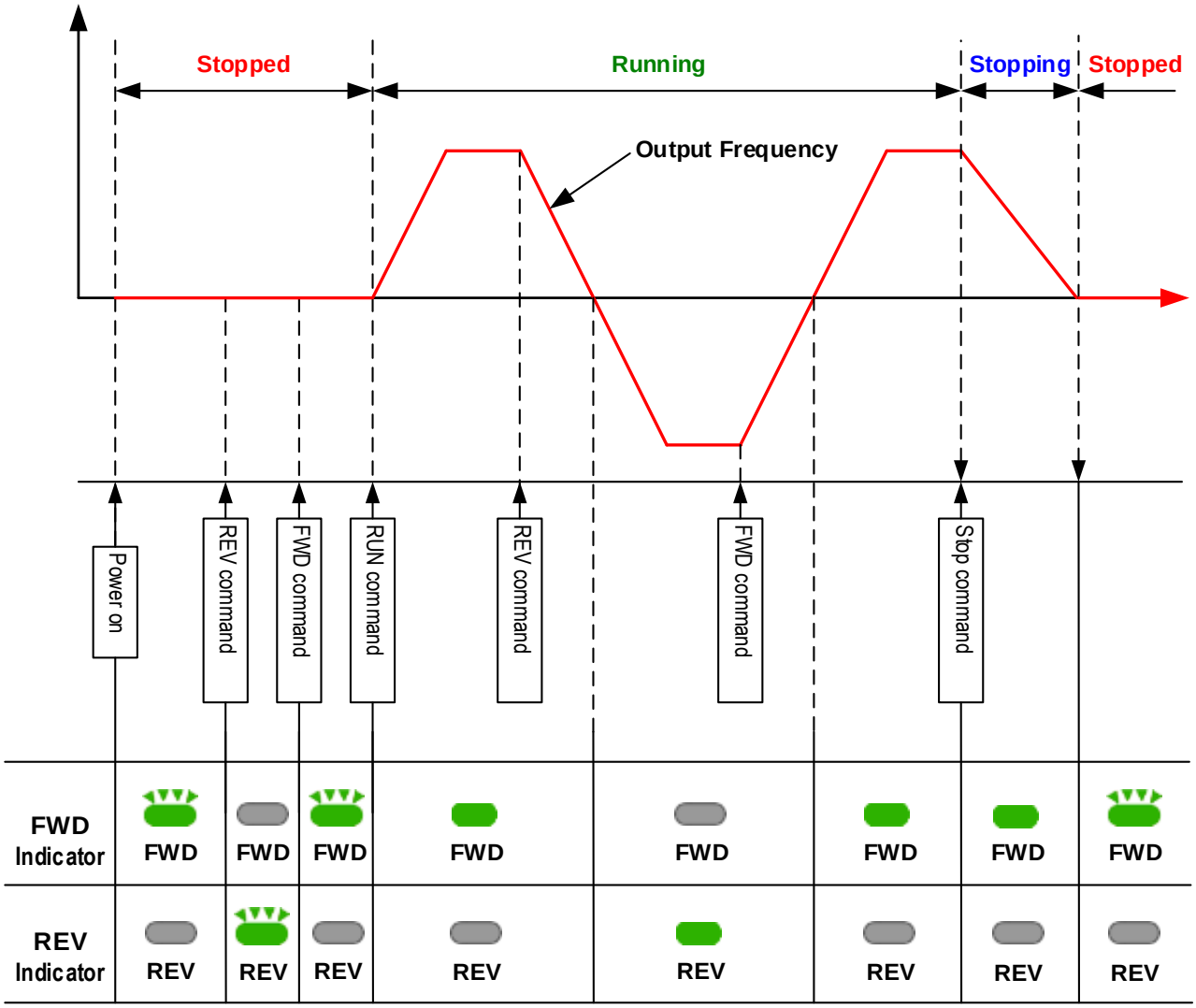

4.2 Parameters

Parameter group	Name
Group 00	Basic Parameters
Group 01	V/F Control Parameters
Group 02	Motor Parameters
Group 03	External Digital Input and Output Parameters
Group 04	External Analog Input and Output Parameters
Group 05	Preset-Speed Parameters
Group 06	Automatic Program Operation Parameters
Group 07	Start /Stop Parameters
Group 08	Protection Parameters
Group 09	Communication Parameters
Group 10	PID Parameters
Group 11	Performance Control Parameters
Group 12	Monitoring Parameters
Group 13	Maintenance Parameters
Group 14	PLC Parameters
Group 15	PLC Monitoring Parameters

Parameter Notes	
***1**	Parameter can be adjusted during running mode
***2**	Cannot be modified in communication mode
***3**	Does not change with factory reset
***4**	Read only
***5**	Available for above V1.1
***6**	Available for above V1.3
***7**	Available for above V1.7

Group 00: Basic parameters					
No.	**Description**	**Range**	**Factory Setting**	**Unit**	**Note**
00-00	Control Mode Selection	0:V/F Mode 1:Vector Mode	0	-	
00-01	Reserved				
00-02	Main Run Command Source Selection	0:Keypad 1:External Run/Stop Control 2:Communication 3:PLC	0	-	
00-03	Alternative Run Command Source Selection	0:Keypad 1:External Run/Stop Control 2:Communication	0	-	
00-04	Operation Modes for External Terminals	0:Forward/Stop-Reverse/Stop 1:Run/Stop- Reverse/Forward 2: 3 Wire Control Mode-Run/Stop	0	-	
00-05	Main Frequency Command Source Selection	0:UP/DOWM of Keypad 1:Potentiometer on Keypad 2:External AI1 Analog Signal Input 3:External AI2 Analog Signal Input 4:External Up/Down Frequency Control 5:Communication Setting Frequency 6:PID Ouput Frequency 7:Pulse Input	0	-	 ***6**
00-06	Alternative Frequency Command Source Selection	0:UP/DOWM of Keypad 1:Potentiometer on Keypad 2:External AI1 Analog Signal Input 3:External AI2 Analog Signal Input 4:External Up/Down Frequency Control 5:Communication Setting Frequency 6:PID Ouput Frequency 7:Pulse Input	4	-	 ***6**
00-07	Main and Alternative Frequency Command Modes	0:Main or Alternative Frequency 1:Main Frequency+ Alternative Frequency	0	-	
00-08	Communication Frequency Command	0.00~650.00	60.00	Hz	*4
00-09	Frequency Command Save on Power Down	0: Disable 1: Enable	0	-	
00-10	Initial Frequency Selection (keypad mode)	0:by Current Frequency Command 1:by 0 Frequency Command 2:by 00-11	0	-	
00-11	Initial Frequency Setpoint	0.00~650.00	50.00/60.00	Hz	
00-12	Frequency Upper Limit	0.01~650.00	50.00/60.00	Hz	
00-13	Frequency Lower Limit	0.00~649.99	0.00	Hz	
00-14	Acceleration Time 1	0.1~3600.0	10.0	Sec	*1
00-15	Deceleration Time 1	0.1~3600.0	10.0	Sec	*1
00-16	Acceleration Time 2	0.1~3600.0	10.0	Sec	*1
00-17	Deceleration Time 2	0.1~3600.0	10.0	Sec	*1
00-18	Jog Frequency	0.00~650.00	2.00	Hz	***1*7**
00-19	Jog Acceleration Time	0.1~3600.0	0.5	Sec	***1*7**
00-20	Jog Deceleration Time	0.1~3600.0	0.5	Sec	***1*7**

Group 01: V/F Control Parameters					
No.	**Description**	**Range**	**Factory Setting**	**Unit**	**Note**
01-00	Volts/Hz Patterns	0~18	0/9	-	
01-01	V/F Max voltage	200V:170.0~264.0 400V:323.0~528.0	220.0/440.0	Vac	
01-02	Max Frequency	0.20 ~ 650.00	50.00/60.00	Hz	
01-03	Max Frequency Voltage Ratio	0.0 ~ 100.0	100.0	%	
01-04	Mid Frequency 2	0.10 ~ 650.00	25.00/30.00	Hz	
01-05	Mid Frequency Voltage Ratio 2	0.0 ~ 100.0	50.0	%	
01-06	Mid Frequency 1	0.10 ~ 650.00	10.00/12.00	Hz	
01-07	Mid Frequency Voltage Ratio 1	0.0 ~ 100.0	20.0	%	
01-08	Min Frequency	0.10 ~ 650.00	0.50/0.60	Hz	
01-09	Min Frequency Voltage Ratio	0.0 ~ 100.0	1.0	%	
01-10	Volts/Hz Curve Modification (Torque Boost)	0 ~ 10.0	0.0	%	*1
01-11	V/F start Frequency	0.00~10.00	0.00	Hz	
01-12	Slip compensation gain	0.05~10.00	0.10	S	
01-13	V/F Mode Select	0 : Mode 0 1 : Mode 1	by models	-	

Group 02: IM Motor parameters					
No.	**Description**	**Range**	**Factory Setting**	**Unit**	**Note**
02-00	Motor No Load Current	0~[(Patameter 02-01)-0.1]	-	Amps(AC)	*3
02-01	Motor Rated Current (OL1)	0.2~100	-	A	*3
02-02	Motor rated Slip Compensation	0.0 ~ 200.0	0.0	%	*1
02-03	Motor rated speed	0~39000	-	Rpm	*3
02-04	Motor rated voltage	200V: 170.0~264.0 400V: 323.0~528.0	220.0/440.0	V	
02-05	Motor rated power	0.1~37.0	-	KW	
02-06	Motor rated frequency	0~650.0	50.0/60.0	Hz	
02-07	Motor pole number	2 ~16	4	-	
02-08 ~ 02-13	Reserved				
02-14	Auto Tune	0: Disable 1: Start Auto tune function.	0		
02-15	Stator resistance gain	----			*3*4
02-16	Rotor resistance gain	----			*3*4

Group 03: External Digital Inputs and Relay Output Functions					
No.	**Description**	**Range**	**Factory Setting**	**Unit**	**Note**
03-00	Multifunction Input Term. S1	0:Forward/Stop Command	0	-	
03-01	Multifunction Input Term. S2	1:Reverse/Stop Command	1	-	
03-02	Multifunction Input Term. S3	2:Speed Selection 1	2	-	
03-03	Multifunction Input Term. S4	3:Speed Selection 2	3	-	
03-04	Multifunction Input Term. S5	4:Speed Selection 3	4	-	
03-05	Multifunction Input Term. S6	5:Speed Selection 4	17		
		6:Jog Forward Command			
		7:Jog Reverse Command			
		8:Up Command			
		9:Down Command			
		10:Acc/Dec 2			
		11:Acc/Dec Disabled			
		12:Main/Alternative run source select			
		13:Main/ Alternative Frequency Command select			
		14:Rapid Stop (Decel to stop)			
		15:Base Block			
		16:Disabl PID Function			
		17:Fault Reset			
		18:Auto Run Mode Enable			
		19:Speed Search			
		20:Energy Saving (only V/F)			
		21:Reset PID integral value to Zero			
		22:Counter Input			
		23:Counter reset			
		24:PLC Input			
		25:Pulse Input-Width Measure (S3)			***6**
		26:Pulse Input-Frequency Measure (S3)			***6**
		27:Enable KEB Function			
		28:Fire mode function			***5**
03-06	Up/Down frequency step	0.00~5.00	0.00	Hz	
03-07	Up/Down Keep Frequency Status after Stop Command	0:When Up/Down is used, the preset frequency is held as the inverter stops, and the UP/Down function is disabled	0	-	
		1:When Up/Down is used, the preset frequency is reset to 0 Hz as the inverter stops.			
		2:When Up/Down is used, the preset frequency is held as the inverter stops, and the UP/Down is available.			
03-08	S1 ~ S6 scan confirmation	1~200 Number of Scan cycles	10	2ms	
03-09	S1~ S5 switch type select	xxxx0:S1 NO xxxx1:S1 NC	00000	-	
		xxx0x:S2 NO xxx1x:S2 NC			
		xx0xx:S3 NO xx1xx:S3 NC			
		x0xxx:S4 NO x1xxx:S4 NC			
		0xxxx:S5 NO 1xxxx:S5 NC			
03-10	S6 switch type select	xxxx0:S6 NO xxxx1:S6 NC	00000	-	
03-11	Output Relay RY1	0:Run	0	-	

Group 03: External Digital Inputs and Relay Output Functions					
No.	**Description**	**Range**	**Factory Setting**	**Unit**	**Note**
	(Terminals R1A,R1B, R1C)				
03-12	Output Relay RY2. (Terminals R2A, R2B)	1:Fault	1		
		2:Setting Frequency Reached			
		3:Frequency Reached. Set by (3-13±3-14)			
		4:Output Frequency Detection1(> 3-13)			
		5:Output Frequency Detection2(< 3-13)			
		6:Auto Restart			
		7:Momentary AC Power Loss			
		8:Rapid Stop			
		9:Base Block			
		10:Motor Overload Protection(OL1)			
		11:Drive Overload Protection(OL2)			
		12:Over-torque Threshold Level (OL3)			
		13:Preset Output Current Reached (03-15~16)			
		14:Brake Control (03-17~18)			
		15:PID Feedback Signal Loss			
		16: Single pre-set count (3-22)			
		17: Dual pre-set count (3-22~23)			
		18:PLC Status Indicator (00-02)			
		19:PLC control			
		20:Zero Speed			***6**
03-13	Frequency Reached Level	0.00~650.00	0.00	Hz	*1
03-14	Frequency Reached Detection Range (±)	0.00~30.00	2.00	Hz	*1
03-15	Preset output current reached	0.1~15.0	0.1	A	
03-16	Preset output Current detection delay Time	0.1~10.0	0.1	Sec	
03-17	Brake Release level	0.00~20.00	0.00	Hz	
03-18	Brake Engage Level	0.00~20.00	0.00	Hz	
03-19	Relay Output function type	0:A (Normally open) 1:B (Normally close)	0	-	
03-20	Internal / external multi-function input terminal selection	0~63	0	-	
03-21	Action to set the internal multi-function input terminals	0~63	0	-	
03-22	Pre-set count 1	0~9999	0	-	
03-23	Pre-set count 2	0~9999	0	-	
03-24	Output under current detection	0:Disable	0	-	
		1:Enable			
03-25	Output under current detection level	5%~100%	20%	%	
03-26	Output under current detection delay time	0.0~50.0s	20.0	Sec	
03-27	Pulse Frequency	0.01~0.20	0.1	kHz	*7
03-28	Pulse Frequency Gain	0.01~9.99	1.00		*6

※ “NO” indicates normally open, “NC” indicates normally closed.

Group 04: External Analog Input and Output Parameters					
No.	**Description**	**Range**	**Factory Setting**	**Unit**	**Note**
04-00	Analog Input Signal Type Select (AI1/AI2)	AI1 AI2 (0): 0~10V (0~20mA) 0~10V (0~20mA) (1): 0~10V (0~20mA) 2~10V (4~20mA) (2): 2~10V (4~20mA) 0~10V (0~20mA) (3): 2~10V (4~20mA) 2~10V (4~20mA)	1	-	*7
04-01	AI1 Signal Verification Scan Rate	1~200	50	2ms	
04-02	AI1 Gain	0 ~ 1000	100	%	*1
04-03	AI1 Bias	0 ~ 100	0	%	*1
04-04	AI1 Bias Selection	0: Positive 1: Negative	0	-	*1
04-05	AI1 Slope	0: Positive 1: Negative	0	-	*1
04-06	AI2 Signal Verification Scan Rate	1~200	50	2ms	
04-07	AI2 Gain	0 ~ 1000	100	%	*1
04-08	AI2 Bias	0 ~ 100	0	%	*1
04-09	AI2 Bias Selection	0: Positive 1: Negative	0	-	*1
04-10	AI2 Slope	0: Positive 1: Negative	0	-	*1
04-11	Analog Output (AO) Mode	0: Output Frequency 1: Frequency Command 2: Output Voltage 3: DC Bus Voltage 4: Motor Current (100% rated current)	0	-	*1
04-12	Analog Output (AO) Gain	0 ~ 1000	100	%	*1
04-13	Analog Output (AO) Bias	0 ~ 100	0	%	*1
04-14	AO Bias Selection	0: Positive 1: Negative	0	-	*1
04-15	AO Slope	0: Positive 1: Negative	0	-	*1
04-16	F-Gain Function	0: Invalid 1: Effective	0	-	*1

Group 05: Preset Speed Parameters					
No.	**Description**	**Range**	**Factory Setting**	**Unit**	**Note**
05-00	Preset Speed Control Mode Selection	0: Common Accel/Decel Accel/Decel 1 or 2 apply to all speeds 1: Individual Accel/Decel for each preset speed 0-15 apply to the selected preset speeds (Acc0/Dec0~Acc15/Dec15)	0	-	
05-01	Preset Speed 0 (Keypad Freq)	0.00 ~ 650.00	5.00	Hz	
05-02	Preset Speed1 (Hz)		5.00	Hz	*1
05-03	Preset Speed2 (Hz)		10.00	Hz	*1
05-04	Preset Speed3 (Hz)		20.00	Hz	*1
05-05	Preset Speed4 (Hz)		30.00	Hz	*1
05-06	Preset Speed5 (Hz)		40.00	Hz	*1
05-07	Preset Speed6 (Hz)		50.00	Hz	*1
05-08	Preset Speed7 (Hz)		50.00	Hz	*1
05-09	Preset Speed8 (Hz)		0.00	Hz	*1
05-10	Preset Speed9 (Hz)		0.00	Hz	*1
05-11	Preset Speed10 (Hz)		0.00	Hz	*1
05-12	Preset Speed11 (Hz)		0.00	Hz	*1
05-13	Preset Speed12 (Hz)		0.00	Hz	*1
05-14	Preset Speed13 (Hz)		0.00	Hz	*1
05-15	Preset Speed14 (Hz)		0.00	Hz	*1
05-16	Preset Speed15 (Hz)		0.00	Hz	*1
05-17	Preset Speed0-Acctime	0.1 ~ 3600.0	10.0	Sec	*1
05-18	Preset Speed0-Dectime		10.0	Sec	*1
05-19	Preset Speed1-Acctime		10.0	Sec	*1
05-20	Preset Speed1-Dectime		10.0	Sec	*1
05-21	Preset Speed2-Acctime		10.0	Sec	*1
05-22	Preset Speed2-Dectime		10.0	Sec	*1
05-23	Preset Speed3-Acctime		10.0	Sec	*1
05-24	Preset Speed3-Dectime		10.0	Sec	*1
05-25	Preset Speed4-Acctime		10.0	Sec	*1
05-26	Preset Speed4-Dectime		10.0	Sec	*1
05-27	Preset Speed5-Acctime		10.0	Sec	*1
05-28	Preset Speed5-Dectime		10.0	Sec	*1
05-29	Preset Speed6-Acctime		10.0	Sec	*1
05-30	Preset Speed6-Dectime		10.0	Sec	*1
05-31	Preset Speed7-Acctime		10.0	Sec	*1
05-32	Preset Speed7-Dectime		10.0	Sec	*1
05-33	Preset Speed8-Acctime		10.0	Sec	*1
05-34	Preset Speed8-Dectime		10.0	Sec	*1
05-35	Preset Speed9-Acctime		10.0	Sec	*1
05-36	Preset Speed9-Dectime		10.0	Sec	*1
05-37	Preset Speed10-Acctime		10.0	Sec	*1
05-38	Preset Speed10-Dectime		10.0	Sec	*1
05-39	Preset Speed11-Acctime		10.0	Sec	*1

Group 05: Preset Speed Parameters					
No.	**Description**	**Range**	**Factory Setting**	**Unit**	**Note**
05-40	Preset Speed11-Dectime		10.0	Sec	*1
05-41	Preset Speed12-Acctime		10.0	Sec	*1
05-42	Preset Speed12-Dectime		10.0	Sec	*1
05-43	Preset Speed13-Acctime		10.0	Sec	*1
05-44	Preset Speed13-Dectime		10.0	Sec	*1
05-45	Preset Speed14-Acctime		10.0	Sec	*1
05-46	Preset Speed14-Dectime		10.0	Sec	*1
05-47	Preset Speed15-Acctime		10.0	Sec	*1
05-48	Preset Speed15-Dectime		10.0	Sec	*1

Group 06: Automatic Program Operation Parameters					
No.	**Description**	**Range**	**Factory Setting**	**Unit**	**Note**
06-00	Auto Run Mode Selection (Sequencer)	0: Disabled. 1: Single cycle. (Continues to run from the Unfinished step if restarted). 2: Periodic cycle. (Continues to run from the unfinished step if restarted). 3: Single cycle, then holds the speed Of final step to run. (Continues to run from the unfinished step if restarted). 4: Single cycle. (Starts a new cycle if restarted). 5: Periodic cycle. (Starts a new cycle if restarted). 6: Single cycle, then hold the speed of final step to run. (Starts a new cycle if restarted).	0	-	
06-01	Auto _ Run Mode Frequency Command 1	0.00~650.00	0.00	Hz	*1
06-02	Auto _ Run Mode Frequency Command 2		0.00	Hz	*1
06-03	Auto _ Run Mode Frequency Command 3		0.00	Hz	*1
06-04	Auto _ Run Mode Frequency Command 4		0.00	Hz	*1
06-05	Auto _ Run Mode Frequency Command 5		0.00	Hz	*1
06-06	Auto _ Run Mode Frequency Command 6		0.00	Hz	*1
06-07	Auto _ Run Mode Frequency Command 7		0.00	Hz	*1
06-08	Auto _ Run Mode Frequency Command 8		0.00	Hz	*1

06-09	Auto _ Run Mode Frequency Command 9	0 ~ 3600.0	0.00	Hz	*1
06-10	Auto _ Run Mode Frequency Command10		0.00	Hz	*1
06-11	Auto _ Run Mode Frequency Command 11		0.00	Hz	*1
06-12	Auto _ Run Mode Frequency Command 12		0.00	Hz	*1
06-13	Auto _ Run Mode Frequency Command 13		0.00	Hz	*1
06-14	Auto _ Run Mode Frequency Command 14		0.00	Hz	*1
06-15	Auto _ Run Mode Frequency Command 15		0.00	Hz	*1
06-16	Auto_ Run Mode Running Time Setting 0		0.0	Sec	
06-17	Auto_ Run Mode Running Time Setting 1		0.0	Sec	
06-18	Auto_ Run Mode Running Time Setting 2		0.0	Sec	
06-19	Auto_ Run Mode Running Time Setting 3		0.0	Sec	
06-20	Auto_ Run Mode Running Time Setting 4		0.0	Sec	
06-21	Auto_ Run Mode Running Time Setting 5		0.0	Sec	
06-22	Auto_ Run Mode Running Time Setting 6		0.0	Sec	
06-23	Auto_ Run Mode Running Time Setting 7		0.0	Sec	
06-24	Auto_ Run Mode Running Time Setting 8		0.0	Sec	
06-25	Auto_ Run Mode Running Time Setting 9		0.0	Sec	
06-26	Auto_ Run Mode Running Time Setting 10		0.0	Sec	
06-27	Auto_ Run Mode Running Time Setting 11		0.0	Sec	
06-28	Auto_ Run Mode Running Time Setting 12		0.0	Sec	
06-29	Auto_ Run Mode Running Time Setting 13		0.0	Sec	
06-30	Auto_ Run Mode Running Time Setting 14		0.0	Sec	
06-31	Auto_ Run Mode Running Time Setting 15		0.0	Sec	

06-32	Auto_ Run Mode Running Direction 0	0: Stop 1: Forward 2: Reverse	0	-	
06-33	Auto_ Run Mode Running Direction 1		0	-	
06-34	Auto_ Run Mode Running Direction 2		0	-	
06-35	Auto_ Run Mode Running Direction 3		0	-	
06-36	Auto_ Run Mode Running Direction 4		0	-	
06-37	Auto_ Run Mode Running Direction 5		0	-	
06-38	Auto_ Run Mode Running Direction 6		0	-	
06-39	Auto_ Run Mode Running Direction 7		0	-	
06-40	Auto_ Run Mode Running Direction 8		0	-	
06-41	Auto_ Run Mode Running Direction 9		0	-	
06-42	Auto_ Run Mode Running Direction10		0	-	
06-43	Auto_ Run Mode Running Direction 11		0	-	
06-44	Auto_ Run Mode Running Direction12		0	-	
06-45	Auto_ Run Mode Running Direction13		0	-	
06-46	Auto_ Run Mode Running Direction 14		0	-	
06-47	Auto_ Run Mode Running Direction 15		0	-	

※Frequency of the step 0 is set by parameter 05-01, keypad frequency.

Group 07: Start/Stop Parameters					
No.	**Description**	**Range**	**Factory Setting**	**Unit**	**Note**
07-00	Momentary Power Loss and Restart	0: Momentary Power Loss and Restart Disable 1: Momentary Power Loss and Restart Enable	0	-	
07-01	Auto Restart Delay Time	0.0~800.0	0.0	Sec	
07-02	Number of Auto Restart Attempts	0~10	0	-	
07-03	Reset Mode Setting	0: Enable Reset Only when Run Command is Off 1: Enable Reset when Run Command is On or Off	0	-	
07-04	Direct Running on Power Up	0: Enable Direct run on power up 1: Disable Direct run on power up	1	-	
07-05	Delay-ON Timer	1.0~300.0	1.0	Sec	
07-06	DC Injection Brake Start Frequency	0.10 ~ 10.00	1.5	Hz	
07-07	DC Injection Brake Level (Current Mode)	0.0 ~ 150.0	50.0	%	
07-08	DC Injection Brake Time	0.0 ~ 25.5	0.5	Sec	
07-09	Stopping Method	0: Deceleration to stop 1: Coast to stop	0	-	
07-10	Starting Methods	0: Normal Start 1: Speed Search	0	-	
07-11	Starting method for auto restart after fault	0: Speed Search 1: Normal start	0	-	
07-12	Power Loss Ride Through Time	0.0 ~ 2.0	0.5	Sec	
07-13	Main Circuit Low Voltage Detection Level	150.0~210.0 300.0~420.0	190.0/380.0	Vac	
07-14	Kinetic Energy Back-up Deceleration Time	0.0~25.0: KEB Deceleration Time	0.0	Sec	
07-15	DC Injection Brake Mode	0 : Current Mode 1 : Voltage Mode	1	-	*6
07-16	DC Injection Brake Level (Voltage Mode)	0.0~10.0	4.0	%	*6

Group 08: Protection Parameters					
No.	**Description**	**Range**	**Factory Setting**	**Unit**	**Note**
08-00	Trip Prevention Selection	xxxx0: Enable Trip Prevention During Acceleration xxxx1: Disable Trip Prevention During Acceleration xxx0x: Enable Trip Prevention During Deceleration xxx1x: Disable Trip Prevention During Deceleration xx0xx: Enable Trip Prevention in Run Mode xx1xx: Disable Trip Prevention in Run Mode x0xxx: Enable Over Voltage Prevention in Run Mode x1xxx: Disable Over Voltage Prevention in Run Mode	01000	-	*5
08-01	Trip Prevention Level During Acceleration (%)	50 ~ 200	200	%[1]	
08-02	Trip Prevention Level During Deceleration (%)	50 ~ 200	200		
08-03	Trip Prevention Level in Run Mode (%)	50 ~ 200	200		
08-04	Over Voltage Prevention Level in Run Mode	350.0~390.0/700.0~780.0	380.0/760.0	VDC	
08-05	Electronic Motor Overload Protection Operation Mode	0: Disable 1: Enable	1	-	*7
08-06	Operation After Overload Protection is Activated	0: Coast-to-Stop After Overload Protection is Activated 1: Drive Will Not Trip when Overload Protection is Activated (OL1)	0	-	
08-07	Over Heat Protection (cooling fan control)	0: Auto (Depends on temp.) 1: Operate while in RUN Mode 2: Always Run 3: Disabled	1	-	
08-08	AVR Function (Auto Voltage Regulation)	0: AVR Function is enabled 1: AVR Function is disabled 2: AVR Function is disabled for Stop 3: AVR Function is disabled for Deceleration. 4: AVR Function is disabled for Stop and Deceleration. 5: When VDC>360V, AVR Function is disabled for Stop and Deceleration.	4	-	*5
08-09	Input Phase Loss Protection	0: Disable 1: Enable	0	-	
08-10	Output Phase Losts Protection	0: Disable 1: Enable	0	-	
08-11	Motor Type Selection	0: Overload protection (Standard Motor) 1: Overload protection (Inverter Duty Motor)	0	-	
08-12	Motor Overload Protection Curve	0: Motor Overload Protection for General loads (OL=103 %) (150% for 1 Minutes) 1: Motor Over load Protection for HVAC (Fan & Pump) (OL=113%) (123% for 1 Minutes).	0	-	
08-13	Over Torque Detection Control	0: Over Torque Detection Disabled 1: Detected After the Setting Frequency 2: Detected When Running	0	-	

[1] Base on the percentage of inverter rated current.

Group 08: Protection Parameters					
No.	**Description**	**Range**	**Factory Setting**	**Unit**	**Note**
08-14	Over torque protection action	0: Stop Output After Over Torque Detection (Free Run to Stop) 1: Continue Running After Over Torque Detection (Display only OL3)	0	-	
08-15	Over Torque Detection Level	30~300	160	-	
08-16	Over Torque Detection Time	0.0~25.0	0.1	-	
08-17	Fire Mode	0: Disable 1: Enable	0	-	*5
08-18	Ground Fault Detection	0: Disable 1: Enable	0		*7

Notes: Fire mode function

1. Before the firmware rev. 1.1, the fire mode is enabled when parameter 08-17 = 1
2. After the firmware 1.1, the firemode is enabled when any of parameters 03-00~03-05 is set to a value of 28
3. The keypad display will indicate FIrE
4. In fire mode the inverter will run at full speed
5. Parameter 08-18 is only displayed in the frame 3, 4 models

Group 09: Communication Parameters					
No.	**Description**	**Range**	**Factory Setting**	**Unit**	**Note**
09-00	Assigned Communication Station Number	1 ~ 32	1	-	*2*3
09-01	RTU/ASCII Code Selection	0:RTU Code 1:ASCII Code	0	-	*2*3
09-02	Baud Rate Setting (bps)	0:4800 1:9600 2:19200 3:38400	2	bps	*2*3
09-03	Stop Bit Selection	0:1 Stop Bit 1:2 Stop Bits	0	-	*2*3
09-04	Parity Selection	0:Without Parity 1:With Even Parity 2:With Odd Parity	0	-	*2*3
09-05	Data Format Selection	0: 8-Bits Data 1: 7-Bits Data	0	-	*2*3
09-06	Communication Time-Out Detection Time	0.0 ~ 25.5	0.0	Sec	
09-07	Communication Time Out Operation Selection	0:Deceleration to Stop (00-15: Deceleration Time 1) 1:Coast to Stop 2:Deceleration to Stop (00-17: Deceleration Time 2) 3:Continue Operating	0	-	
09-08	Comm. Fault Tolerance Count.	1 ~ 20	3		
09-09	Wait Time of Inverter Transmission	5 ~ 65	5	ms	

Group 10: PID Parameters					
No.	**Description**	**Range**	**Factory Setting**	**Unit**	**Note**
10-00	PID Target Value Selection (When 00-05\00-06=6 This Function is Enabled)	0: Potentiometer on Keypad 1: Analog Signal Input. (AI1) 2: Analog Signal Input. (AI2) 3: Frequency Set by Communication 4: Keypad Frequency Parameter 10-02	1	-	*1
10-01	PID Feedback Value Selection	0: Potentiometer on Keypad 1: Analog Signal Input. (AI1) 2: Analog Signal Input. (AI2) 3: Frequency Set by Communication	2	-	*1
10-02	PID Target(Keypad Input)	0.0~100.0	50.0	%	*1
10-03	PID Mode Selection	0: Disable 1: Deviation D Control. FWD Characteristic. 2: Feedback D Control FWD Characteristic. 3: Deviation D Control Reverse Characteristic. 4: Feedback D Control Reverse Characteristic.	0	-	
10-04	Feedback Gain Coefficient	0.00 ~ 10.00	1.00		*1
10-05	Proportional Gain	0.0 ~ 10.0	1.0		*1
10-06	Integral Time	0.0 ~ 100.0	10.0	Sec	*1
10-07	Derivative Time	0.00 ~ 10.00	0.00	Sec	*1
10-08	PID Offset	0: Positive 1: Negative	0	-	*1
10-09	PID Offset Adjust	0 ~ 109	0	%	*1
10-10	PID Output Lag Filter Time	0.0 ~ 2.5	0.0	Sec	*1
10-11	Feedback Loss Detection Mode	0: Disable 1: Enable - Drive Continues to Operate After Feedback Loss 2: Enable - Drive "STOPS" After Feedback Loss	0	-	
10-12	Feedback Loss Detection Level	0 ~ 100	0	%	
10-13	Feedback Loss Detection Delay Time	0.0 ~25.5	1.0	Sec	
10-14	Integration Limit Value	0 ~ 109	100	%	*1
10-15	Integral Value Resets to Zero when Feedback Signal Equals the Target Value	0: Disable 1: After 1 Second 30: After 30 Second (0~30)	0	-	
10-16	Allowable Integral value Error Margin (Units, 1 Unit = 1/8192)	0 ~ 100	0	-	
10-17	PID Sleep Frequency Level	0.00~650.00	0.00	Hz	
10-18	PID Sleep Function Delay Time	0.0 ~25.5	0.0	Sec	
10-19	PID Wake up frequency Level	0.00 ~ 650.00	0.00	Hz	
10-20	PID Wake up function Delay Time	0.0 ~ 25.5	0.0	Sec	
10-21	Max PID Feedback Setting Level	0 ~999	100	-	*1

Group 10: PID Parameters					
No.	**Description**	**Range**	**Factory Setting**	**Unit**	**Note**
10-22	Min PID Feedback Setting Level	0 ~999	0	-	*1

Group 11: Auxilary Parameters					
No.	**Description**	**Range**	**Factory Setting**	**unit**	**Note**
11-00	Reverse Operation Control	0: Reverse Command is Enabled 1: Reverse Command is Disabled	0	-	
11-01	Carrier Frequency (kHz)	1~16	5	KHz	
11-02	Carrier Mode Selection	0: Mode0, 3Phase PWM modulation 1: Mode1, 2Phase PWM modulation 2: Mode2, 2Phase Random PWM Modulation	0	-	
11-03	Carrier Frequency Reduction by Temperature Rise	0:Disable 1:Enable	0	-	
11-04	S-Curve Acc 1	0.0 ~ 4.0	0.2	Sec	
11-05	S-Curve Acc 2	0.0 ~ 4.0	0.2	Sec	
11-06	S-Curve Dec 3	0.0 ~ 4.0	0.2	Sec	
11-07	S-Curve Dec 4	0.0 ~ 4.0	0.2	Sec	
11-08	Skip Frequency 1	0.00 ~ 650.00	0.00	Hz	*1
11-09	Skip Frequency 2	0.00 ~ 650.00	0.00	Hz	*1
11-10	Skip Frequency 3	0.00 ~ 650.00	0.00	Hz	*1
11-11	Skip Frequency Range Bandwith (±)	0.00 ~ 30.00	0.00	Hz	*1
11-12	Energy Saving Gain (V/F Mode)	0 ~ 100	80	%	
11-13	Regeneration Prevention Function	0:Disable 1:Enable 2:Enable (only during constant speed)	0	-	
11-14	Regeneration Prevention Voltage Level	200V:300.0~400.0 400V:600.0~800.0	380.0 760.0	V	
11-15	Regeneration Prevention Frequency Limit	0.00 ~ 15.00	3.00	Hz	
11-16	Regeneration Prevention Voltage Gain	0~200	100	%	
11-17	Regeneration Prevention Frequency Gain	0~200	100	%	

Group 12: Monitoring Parameters					
No.	**Description**	**Range**	**Factory Setting**	**Unit**	**Note**
12-00	Extended Display Mode	00000~88888 Each digit can be set from 0 to 8 as listed below. 0: Default Display (Frequency and Parameters) 1:Output Current 2:Output Voltage 3:DC Voltage 4:Temperature 5:PID Feedback 6:Analog Signal Input. (AI1) 7:Analog Signal Input. (AI2) 8:Count Status	00000	-	*1
12-01	PID Feedback Display Format	0:Integer (xxx) 1:One Decimal Place (xx.x) 2:Two Decimal Places (x.xx)	0	-	*1
12-02	PID Feedback Display Unit Setting	0:xxx-- 1:xxxpb(pressure) 2:xxxfl(flow)	0	-	*1
12-03	Custom Units (Line Speed) Value	0~65535	1500/1800	RPM	*1
12-04	Custom Units (Line Speed) Display Mode	0:Drive Output Frequency is Displayed 1:Line Speed.Integer.(xxxxx) 2:Line Speed.One Decimal Place. (xxxx.x) 3:Line Speed.Two Decimal Places (xxx.xx) 4:Line Speed.Three Decimal Places (xx.xxx)	0	-	*1
12-05	Inputs and Output Logic Status Display (S1~S6, RY1 and RY2)	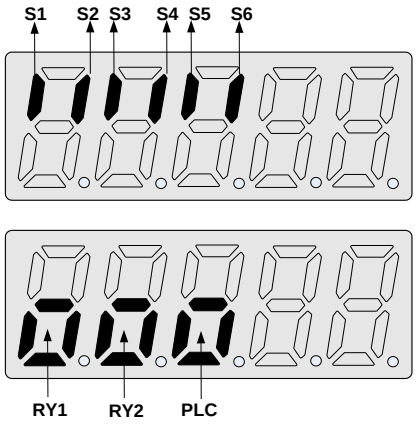	-	-	*4
12-06	Alarm Selections for Inverter Components Life Expectancy	xxxx0:Life Alarm of Inrush Current Suppression Circuit is Invalid xxxx1:Life Alarm of Inrush Current Suppression Circuit is Valid xxx0x:Life Alarm of Control Circuit Capacitors is Invalid xxx1x:Life Alarm of Control Circuit Capacitors is Valid xx0xx:Life Alarm of Main Circuit Capacitors is Invalid xx1xx:Life Alarm of Main Circuit Capacitors is Valid	00000	-	*1
12-07	Detect Main Circuit Capacitors	Reserved			

Group 12: Monitoring Parameters					
No.	**Description**	**Range**	**Factory Setting**	**Unit**	**Note**
12-08	Display of Inrush Current Suppression Circuit	0~100	100	%	
12-09	Display of Control Circuit Capacitors	0~100	100	%	
12-10	Reserved				
12-11	Output Current when Fault Appeared	----	0	A	
12-12	Output Voltage when Fault Appeared	----	0	Vac	
12-13	Output Frequency when Fault Appeared	----	0	Hz	
12-14	DC Bus Voltage when Fault Appeared	----	0	Vac	
12-15	Frequency Command when Fault Appeared	----	0	Hz	

Group 13: Maintenance Parameters					
No.	**Description**	**Range**	**Factory Setting**	**unit**	**Note**
13-00	Drive Horsepower Code	----	-	-	*3
13-01	Software Version	----	-	-	*3*4
13-02	Fault Log (Latest 3 Faults)	----	-	-	*3*4
13-03	Accumulated Inverter Operation Time 1	0~23	-	hour	*3
13-04	Accumulated Inverter Operation Time 2	0~65535	----	day	*3
13-05	Accumulated Inverter Operation Time Mode	0: Power On time 1: Operation time	0	-	*3
13-06	Parameter Lock	0:Enable all Functions 1:Preset Speeds from 05-01 to 05-15 Can't be Changed 2:All Functions Can't be Changed Except for Preset speeds from 05-01 to 05-15 3:Disable All Functions Except 13-06	0	-	
13-07	Parameter Lock Code	00000~65535	00000	-	
13-08	Reset Drive to Factory Settings	1150:Reset to Factory Setting(50Hz System) 1160:Reset to Factory Setting(60 Hz System) 1112:Reset PLC	00000	-	

Group 14: PLC Parameters					
No.	**Description**	**Range**	**Factory Setting**	**unit**	**Note**
14-00	Setting Value1 of T1	0~9999	0	-	
14-01	Setting Value1 of T1 (mode 7)	0~9999	0	-	
14-02	Setting Value1 of T2	0~9999	0	-	
14-03	Setting Value1 of T2 (mode 7)	0~9999	0	-	
14-04	Setting Value1 of T3	0~9999	0	-	
14-05	Setting Value1 of T3 (mode 7)	0~9999	0	-	
14-06	Setting Value1 of T4	0~9999	0	-	
14-07	Setting Value1 of T4 (mode 7)	0~9999	0	-	
14-08	Setting Value1 of T5	0~9999	0	-	
14-09	Setting Value1 of T5 (mode 7)	0~9999	0	-	
14-10	Setting Value1 of T6	0~9999	0	-	
14-11	Setting Value1 of T6 (mode 7)	0~9999	0	-	
14-12	Setting Value1 of T7	0~9999	0	-	
14-13	Setting Value1 of T7 (mode 7)	0~9999	0	-	
14-14	Setting Value1 of T8	0~9999	0	-	
14-15	Setting Value1 of T8 (mode 7)	0~9999	0	-	
14-16	Setting Value1 of C1	0~65535	0	-	
14-17	Setting Value1 of C2	0~65535	0	-	
14-18	Setting Value1 of C3	0~65535	0	-	
14-19	Setting Value1 of C4	0~65535	0	-	
14-20	Setting Value1 of C5	0~65535	0	-	
14-21	Setting Value1 of C6	0~65535	0	-	
14-22	Setting Value1 of C7	0~65535	0	-	
14-23	Setting Value1 of C8	0~65535	0	-	
14-24	Setting Value1 of AS1	0~65535	0	-	
14-25	Setting Value2 of AS1	0~65535	0	-	
14-26	Setting Value3 of AS1	0~65535	0	-	
14-27	Setting Value1 of AS2	0~65535	0	-	
14-28	Setting Value2 of AS2	0~65535	0	-	
14-29	Setting Value3 of AS2	0~65535	0	-	
14-30	Setting Value1 of AS3	0~65535	0	-	
14-31	Setting Value2 of AS3	0~65535	0	-	
14-32	Setting Value3 of AS3	0~65535	0	-	
14-33	Setting Value1 of AS4	0~65535	0	-	
14-34	Setting Value2 of AS4	0~65535	0	-	
14-35	Setting Value3 of AS4	0~65535	0	-	
14-36	Setting Value1 of MD1	0~65535	1	-	
14-37	Setting Value2 of MD1	0~65535	1	-	
14-38	Setting Value3 of MD1	1~65535	1	-	
14-39	Setting Value1 of MD2	0~65535	1	-	
14-40	Setting Value2 of MD2	0~65535	1	-	
14-41	Setting Value3 of MD2	1~65535	1	-	
14-42	Setting Value1 of MD3	0~65535	1	-	
14-43	Setting Value2 of MD3	0~65535	1	-	
14-44	Setting Value3 of MD3	1~65535	1	-	

14-45	Setting Value1 of MD4	0~65535	1	-	
14-46	Setting Value2 of MD4	0~65535	1		
14-47	Setting Value3 of MD4	1~65535	1	-	

Group 15: PLC Monitoring Parameters					
No.	**Description**	**Range**	**Factory Setting**	**unit**	**Note**
15-00	Current Value of T1	0~9999	0	-	
15-01	Current Value of T1(mode 7)	0~9999	0	-	
15-02	Current Value of T2	0~9999	0	-	
15-03	Current Value of T2(mode 7)	0~9999	0	-	
15-04	Current Value of T3	0~9999	0	-	
15-05	Current Value of T3(mode 7)	0~9999	0	-	
15-06	Current Value of T4	0~9999	0	-	
15-07	Current Value of T4(mode 7)	0~9999	0	-	
15-08	Current Value of T5	0~9999	0	-	
15-09	Current Value of T5(mode 7)	0~9999	0	-	
15-10	Current Value of T6	0~9999	0	-	
15-11	Current Value of T6(mode 7)	0~9999	0	-	
15-12	Current Value of T7	0~9999	0	-	
15-13	Current Value of T7(mode 7)	0~9999	0	-	
15-14	Current Value of T8	0~9999	0	-	
15-15	Current Value of T8(mode 7)	0~9999	0	-	
15-16	Current Value of C1	0~65535	0	-	
15-17	Current Value of C2	0~65535	0	-	
15-18	Current Value of C3	0~65535	0	-	
15-19	Current Value of C4	0~65535	0	-	
15-20	Current Value of C5	0~65535	0	-	
15-21	Current Value of C6	0~65535	0	-	
15-22	Current Value of C7	0~65535	0	-	
15-23	Current Value of C8	0~65535	0	-	
15-24	Current Value of AS1	0~65535	0	-	
15-25	Current Value of AS2	0~65535	0	-	
15-26	Current Value of AS3	0~65535	0	-	
15-27	Current Value of AS4	0~65535	0	-	
15-28	Current Value of MD1	0~65535	0	-	
15-29	Current Value of MD2	0~65535	0	-	
15-30	Current Value of MD3	0~65535	0	-	
15-31	Current Value of MD4	0~65535	0	-	
15-32	Current Value of TD	0~65535	0	μs	

4.3 Description of Parameters

00 - Basic Parameters

00-00	Control Mode Selection
Range	【0】:V/F Mode 【1】:Vector Mode

To select the appropriate vector or V/F control mode according to the load characteristics.

■ If V/F mode is selected, please set parameters, group1 to comply with the load features.

Vector is best suited to control the general load or rapidly-changed torque load.

00-02	Main Run Command Source Selection
00-03	Alternative Run Command Source Selection
Range	【0】: Keypad control 【1】: External terminal control 【2】: Communication control 【3】: PLC

Note: To switch the command source between the setting of main (00-02) and alternative (00-03) assign one of the DI (S1 to S6) to be the “Run Command Switch Over” (03-00~03-05=12).

00-02=0: Keypad Control

Use the keypad to start and stop the inverter and set direction with the forward / reverse key. Refer to section 4-1 for details on the keypad.

00-02=1: External Terminal Control

External terminals are used to start and stop the inverter and select motor direction. There are three different types: 2-wire and 3-wire operation and 2-wire self holding (latching) mode.

■ 2-wire operation

For 2-wire operation, set 03-00 (S1 terminal selection) to 0 and 03-01 (S2 terminal selection) to 1

Terminal S1	Terminal S2	Operation
Open	Open	Stop Inverter
Closed	Open	Run Forward
Open	Closed	Run Reverse
Closed	Closed	Stop Inverter, Display EF9 Alarm after 500ms

Figure 4.3.1 Wiring example of 2-wire

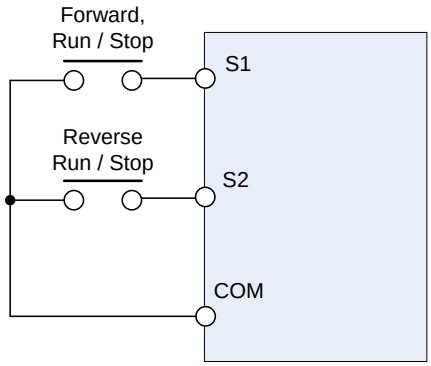

■ **3-wire operation**

Set parameter 00-04 to 2 for 3-wire program initialization, multi-function input terminal S1 is set to run operation, S2 for stop operation and S3 for forward/reverse command.

Note: Terminal S1 must be closed for a minimum of 50ms to activate operation.

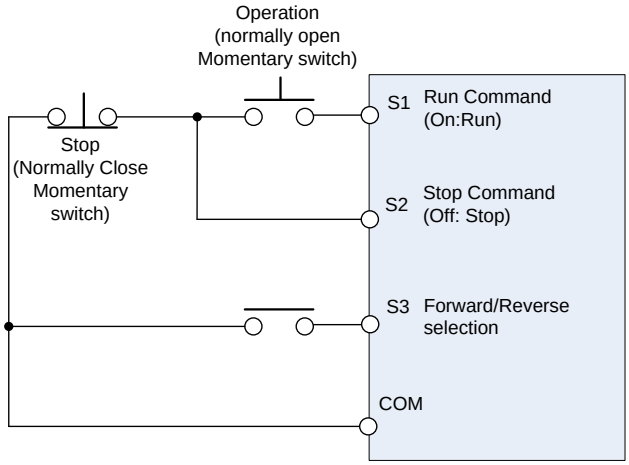

Figure 4.3.2 Wiring example of 3-wire

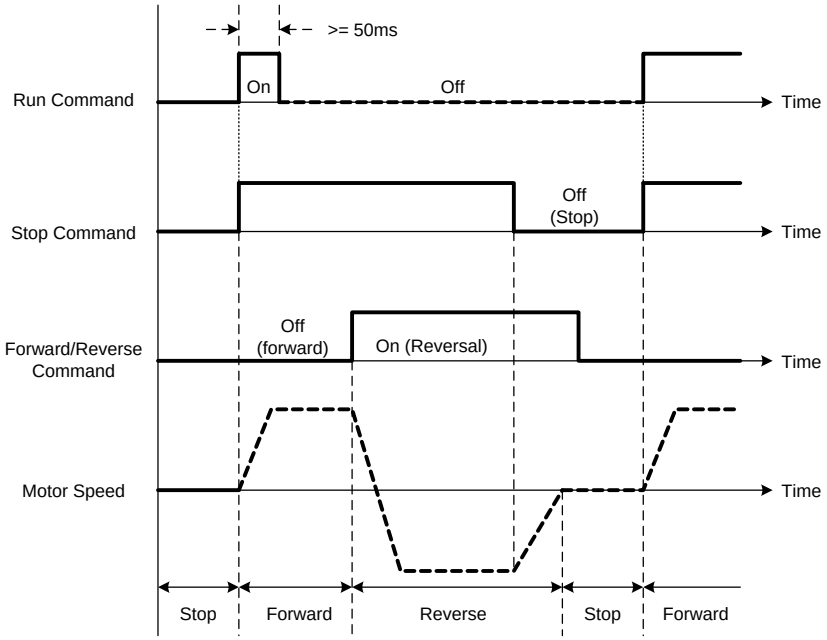

Figure 4.3.3 3-wire operation

00-03=2: Communication control

The inverter is controlled by the RS-485 port. Refer to parameter group 9 for communication setup.

00-03=3: PLC control

The inverter is controlled by the inverter built-in PLC logic. Refer to section 4.3.

00-04	Operation Modes for External Terminals
Range	【0】:Forward/Stop-Reverse/Stop 【1】:Run/Stop- Reverse/ Forward 【2】:3 Wire Control Mode - Run/Stop

■ 00-04 is valid when run command is set to external mode by 00-02/00-03 =1.

2 Wire Operation Mode,

Set 00-04=【0/1】first, before setting (03-00, 03-04) to【0】or【1】

00-04=【0】, Set external terminals (03-00 to 03-05) function to 0 for FWD/Stop or Set to 1 for REV/Stop..

00-04=【1】, Set external terminals (03-00 to 03-05) function to 0 for Run/Stop or Set to 1 for FWD/REV

3 Wire Operation Mode,

00-04 =【2】Terminals S1, S2, S3 are used in a combination to enable 3 wire run/stop mode.

Settings for 03-00, 03-01, and 03–02 will not be effective... (Refer to group 03)

00-05	Main Frequency Command Source Selection
00-06	Alternative Frequency Source Selection
Range	【0】:Up/Down on Keypad 【1】:Potentiometer on Keypad 【2】:External AI1 Analog Signal Input 【3】:External AI2 Analog Signal Input 【4】:External Up/Down Frequency Control 【5】:Communication Setting Frequency 【6】:PID Output Frequency 【7】:Pulse Input

00-05/00-06= 0: Keypad

Use the keypad to enter the frequency reference or by setting parameter 05-01 (frequency reference 1). Note that once the frequency command is switched to alternative frequency reference and 00-06 is set to 0, the frequency can be adjusted using parameter 05-01.

00-05/00-06= 1: Potentiometer on Keypad

Use the keypad potentiometer to set frequency reference

00-05/00-06= 2, 3: External Analog Input AI1 / External Analog Input AI2

Set any of the multi-function terminals (03-00~03-05) to 13, to switch between main and alternate frequency.

Use analog reference from analog input AI1 or AI2 to set the frequency reference (as shown in Figure 4.3.4). Refer to parameter 04-00 to select the signal type.

		AI1	AI2
04-00	Analog Input Signal Type Select (AI1/AI2)	(0): 0~10V (0~20mA)	0~10V (0~20mA)
		(1): 0~10V (0~20mA)	**2~10V (4~20mA) Factory Default**
		(2): 2~10V (4~20mA)	0~10V (0~20mA)
		(3): 2~10V (4~20mA)	2~10V (4~20mA)

JP2/JP3	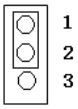	External signal type selection	0~20mA / 4~20mA Analog signal
	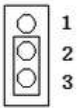		0~10VDC / 2~10VDC Analog signal

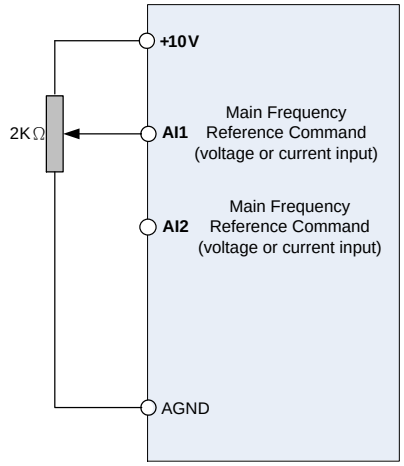

Figure 4.3.4 Analog input as main frequency reference command

00-05/00-06= 4: Terminal UP / DOWN

The inverter accelerates with the UP command closed and decelerates with the DOWN command closed. Please refer to parameter 03-00 ~ 03-05 for additional information.

Note: To use this function both the UP and DOWN command have to be set to any of the input terminals.

00-05/00-06= 5: Communication Control

The frequency reference command is set via the RS-485 communication port using the MODBUS RTU.

Refer to parameter group 9 for additional information.

00-05/00-06= 6: PID Output

Enables PID control, reference frequency is controlled by the PID function, refer to chapter 10 or parameter group 10 for PID setup.

00-05/00-06=7: Pulse Input

Frequency reference from an external pulse input. Can be used only with multi-function input terminal S3 (03-02 = 25 or 26). See parameter group 3 multi-function input selections 25 and 26.

00-07	Main and Alternative Frequency Command Modes
Range	【0】： Main reference frequency 【1】： Main frequency + alternative frequency

When set to 0 the reference frequency is set by the main reference frequency selection of parameter 00-05.
When set to 1 the reference frequency is sum of the main reference frequency (00-05) and alternative frequency (00-06).

Note: The inverter will display the SE1 error when 00-07 = 1 and parameter 00-05 and 00-06 are set to the same selection.

When parameter 00-06 is set to 0 (Keypad) the alternative frequency reference is set by parameter 05-01 (Frequency setting of speed-stage 0).

00-08	Communication Frequency Command – READ ONLY
Range	【0.00~650.00】Hz

Display the frequency reference when 00-05 or 00-06 is set to communication control (3).

00-09	Communication Frequency Command Memory
Range	【0】： Do not store the communication frequency command at power down 【1】： Store communication frequency reference at power down

Note: This parameter is only effective when frequency reference is set via communication (00-05 / 00-06 = 3).

00-10	Initial Frequency Selection
Range	【0】:By Current Freq Command 【1】:By Zero Freq Command 【2】:By 00-11
00-11	Initial Frequency Setpoint
Range	【0.00~650.00】Hz

Notes:
- This parameter is only effective in keypad mode
- When 00-10=【0】, the initial frequency will be current frequency.
- When 00-10=【1】, the initial frequency will be 0.
- When 00-10=【2】, the initial frequency is set by parameter 00-11.

00-12	Upper Limit Frequency
Range	【0.01~650.00】Hz

Set the maximum frequency reference. Maximum output frequency depends on motor selection.
Motor : Maximum frequency parameter 01-02.

00-13	Lower Limit Frequency
Range	【0.00~649.99】Hz

Set the minimum frequency reference. Maximum output frequency depends on motor selection. Motor 1: Maximum frequency is set by parameter 01-02.

Notes:

- When 00-13 and the command frequency are both set to 0.00, and RUN is pressed ”Stpo” is displayed.
- When Frequency command is higher than value in 00-13 inverter output will ramp up from 0.00 to the command frequency.
- When 00-13> 0, and the frequency command value ≤ 00-13, inverter output will ramp up from preset to the lower limit frequency.

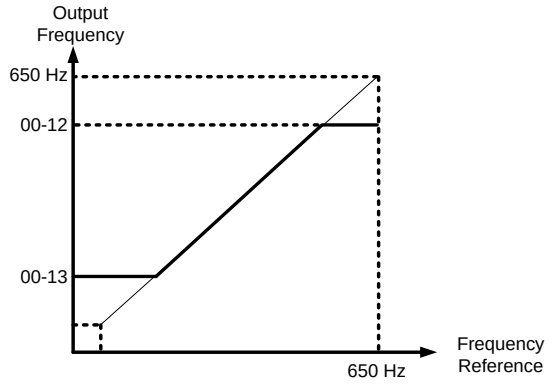

Figure 4.3.5 Frequency reference upper and lower limits

00-14	**Acceleration Time 1**
Range	**【0.1~3600.0】Sec**
00-15	**Deceleration Time 1**
Range	**【0.1~3600.0】Sec**
00-16	**Acceleration Time 2**
Range	**【0.1~3600.0】Sec**
00-17	**Deceleration Time 2**
Range	**【0.1~3600.0】Sec**

Notes:

- Acceleration time is the time required to accelerate from 0 to 100% of maximum output frequency.
- Deceleration time is the time required to decelerate from 100 to 0% of maximum output frequency.
- Maximum frequency is set by parameter 01-02.
- If parameter 01-00=18, Maximum output frequency is set by parameter 01-02.
- If parameter 01-00≠18, Maximum output frequency = 50.00 or 60.00 depending on initialization mode.

Actual acceleration and deceleration time is calculated as follows:

$$\text{Actual acceleration time} = \frac{(00\text{-}14)\text{x}(\text{set frequency} - \text{the minimum starting frequency})}{\text{Maximum output frequency}}$$

$$\text{Actual deceleration time} = \frac{(00\text{-}15)\text{x}(\text{set frequency} - \text{the minimum starting frequency})}{\text{Maximum output frequency}}$$

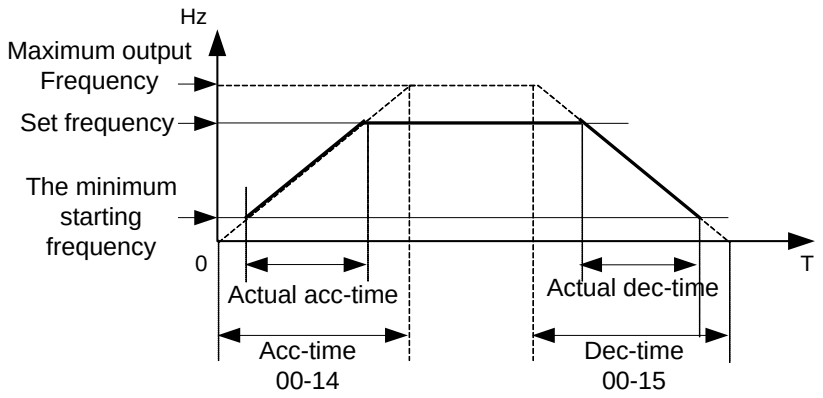

00-18	**Jog Frequency**
Range	**【0.00~650.00】Hz**
00-19	**Jog Acceleration Time**
Range	**【0.1~3600.0】Sec**
00-20	**Jog Deceleration Time**
Range	**【0.1~3600.0】Sec**

The JOG function is operational by using the multi-function input terminals S1 to S6 and setting the relevant parameters 03-00~03-05 to 【6】JOG FWD or【7】JOG REV. Refer to parameter group 3.

Notes:

- To activate the JOG FWD function set any of the multi-function input terminals S1 to S6 to 6.
- To activate the JOG REV function set any of the multi-function input terminals S1 to S6 to 7.
- Jog acceleration time (00-19) is the time required to accelerate from 0 to 100% of maximum output frequency.
- Jog deceleration time (00-20) is the time required to decelerate from 100 to 0% of maximum output frequency.
- Maximum frequency is set by parameter 01-02.
- The inverter uses the Jog frequency (00-18, default 6.0 Hz) as its frequency reference when jog is active.

01-V/F Control Parameters

01-00	Volts/Hz Patterns (V/F)
Range	【0~18】

The V/F curve selection is enabled for V/F mode. Make sure to set the inverter input voltage parameter 01-14.

There are three ways to set V/F curve:
(1) 01-00 = 0 to 17: choose any of the 18 predefined curves (0 to 17).
(2) 01-00 = 18, use 01-02~01-09 and 01-12 ~ 01-13.

The default parameters (01-02 ~ 01-09 and 01-12 ~ 01-13) are the same when 01-00 is set to 18 and 01-00 is set to 0 (50Hz) or 9 (60Hz) depending on the initialization mode.

Parameters 01-02 ~ 01-13 are automatically set when any of the predefined V/F curves are selected.

This parameter will be affected to reset by the initialization parameter (13-08).

Consider the following items as the conditions for selecting a V/F pattern.
(1) The voltage and frequency characteristic of motor.
(2) The maximum speed of motor.

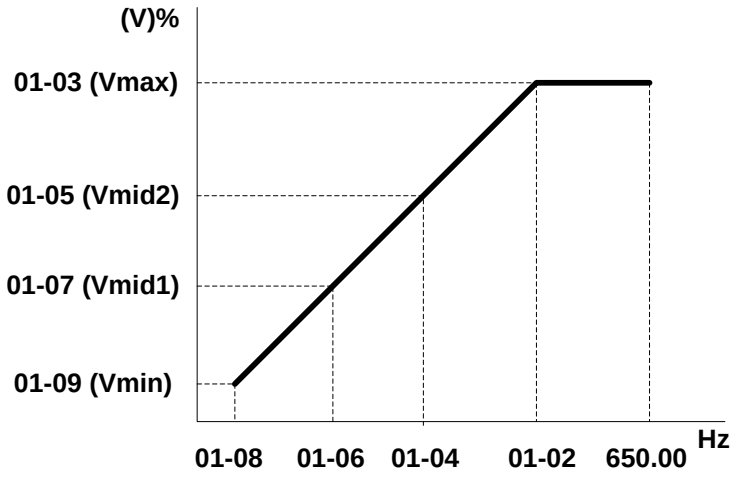

TYPE	50Hz		60Hz	
Function	01-00	V/F pattern	01-00	V/F pattern
General Use	=【0】	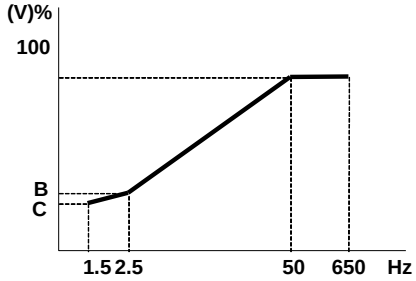	=【9】	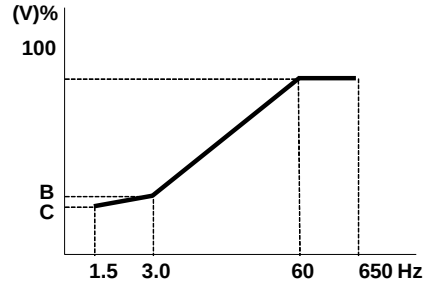
High start torque	=【1】	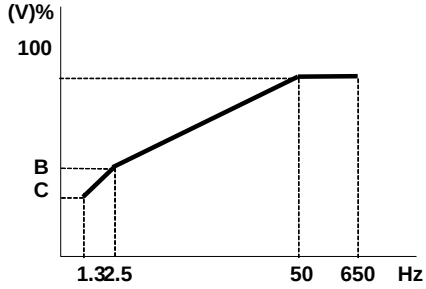	=【10】	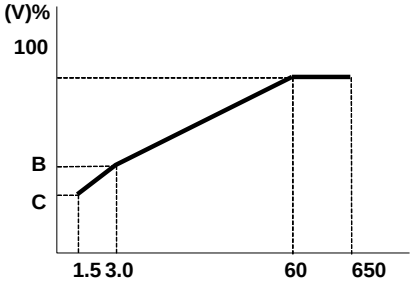
	=【2】		=【11】	
	=【3】		=【12】	
Decreasing torque	=【4】	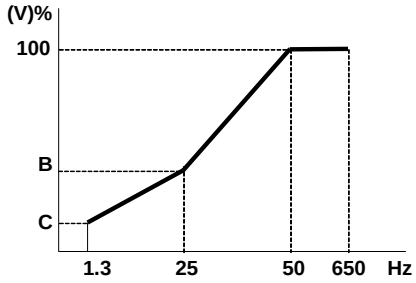	=【13】	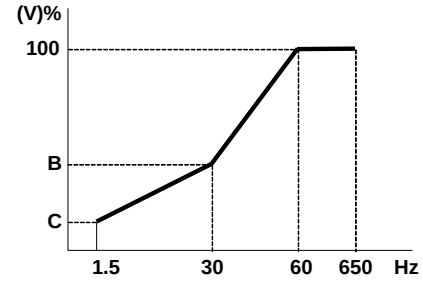
	=【5】		=【14】	
Decreasing torque	=【6】	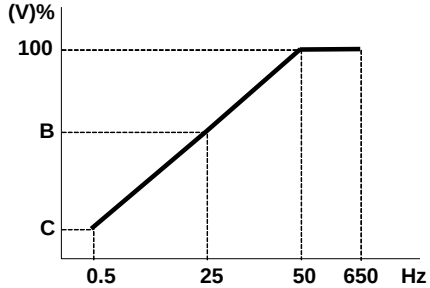	=【15】	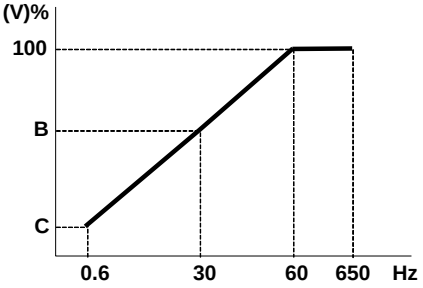
	=【7】		=【16】	
	=【8】		=【17】	

(V) 100% is the maximum output voltage. B, C point preset % settings will be as table below:

01-00	B (Xb)	C (Xc)
0 / 9	7.5%	4.5%
1 / 10	10.0%	7.0%
2	11.0%	8.5%
3	12.0%	9.5%
4	17.5%	4.0%
5	25.0%	5.0%
11	11.0%	8.0%
12	12.0%	9.0%
13	20.5%	7.0%
14	28.5%	8.0%
6 / 15	45.0%	1.0%
7 / 16	55.0%	1.0%
8 / 17	65.0%	1.0%

01-01	**V/F Max Voltage**
Range	**【230V:170.0~264.0, 460V: 323.0~528.0】V**
01-02	**Maximum Frequency**
Range	**【0.20 ~ 650.00】Hz**
01-03	**Maximum Frequency Voltage Ratio**
Range	**【0.0 ~ 100.0】%**
01-04	**Medium Frequency 2**
Range	**【0.10 ~ 650.00】Hz**
01-05	**Medium Frequency Voltage Ratio 2**
Range	**【0.0 ~ 100.0】%**
01-06	**Medium Frequency 1**
Range	**【0.10 ~ 650.00】Hz**
01-07	**Medium Frequency Voltage Ratio 1**
Range	**【0.0 ~ 100.0】%**
01-08	**Minimum Frequency**
Range	**【0.10 ~ 650.00】Hz**
01-09	**Minimum Frequency Voltage Ratio**
Range	**【0.0 ~ 100.0】%**

Notes:

- Max output frequency is set automatically when parameter 01-00 ≠ 18.
- Maximum output frequency is limited by 01-12, frequency upper limit when 01-00 ≠ 18.
- Maximum output frequency is set by parameter 01-02 when 01-00 = 18.

01-10	Volts/Hz Curve Modification (Torque Boost)
Range	【0 ~ 10.0】%

Notes:

- Inverter output V / F curve settings for points B, C can be adjusted using parameter 01-10 to improve the output torque.
- Calculation for point B and C voltage:
    - B point voltage = Xb × maximum output voltage
    - C point voltage = Xc × maximum output voltage
- When 01-10 = 0, torque boost is disabled.

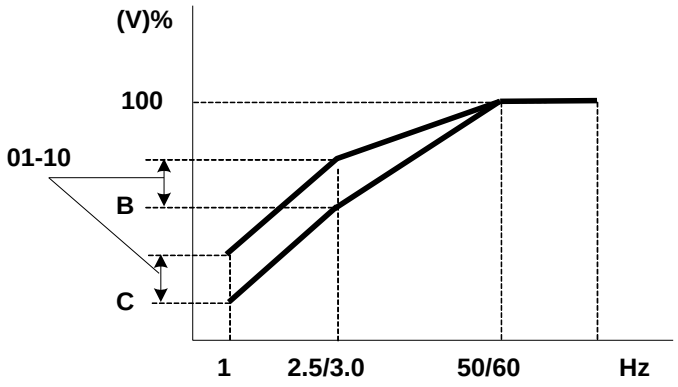

01-11	V/F Start Frequency
Range	【0.00 ~10.00】Hz
01-12	Slip Compensation Gain
Range	【0.05 ~10.00】s

Notes: VF Start Frequency can be used to when start frequency has to be greater than zero.

01-13	V/F Mode Select
Range	【0】: Close Loop 【1】: Open Loop

0: Uses current feedback to estimate motor speed and enhance speed control accuracy

1: No motor speed estimation used; open loop control based on set V/F curve.

02-Motor Parameters

02-00	Motor No Load Current
Range	【0~【 (Parameter 02-01)-0.1】】
02-01	Motor Rated Current
Range	【0.2~100】
02-02	Motor Rated Slip Compensation
Range	【0.0 ~ 200.0】(%)
02-03	Motor Rated Speed
Range	【0~39000】

When the load causes the actual motor speed to be reduced below the speed set by inverter output frequency (Slip), parameter 02-02 Slip compensation can be used to adjust the speed.

$$\text{Slip compensation boost} = \frac{\text{Output Current-(02-00)}}{\text{(02-01)-(02-00)}} \text{ X (02-02) X motor rated slip}$$

Motor slip= Motor synchronization speed - Motor Rated Speed

$$\text{(02-02)approximate Value} = \frac{\text{Motor synchronization speed-Rated speed}}{\text{Motor synchronization speed}}$$

Motor synchronization speed (Marked on the motor nameplate)

$$\text{Motor synchronization speed(RPM)} = \frac{120}{\text{Motor Poles}} \text{ x Motor rated frequency (50/60Hz)}$$

Example: 4 pole motor, 60 Hz, nominal motor speed is 120 ÷ 4 x 60 = 1800 RPM

Note: 02-00/02-01 default value based on inverter rating (13-00), make sure the data matches the motor connected.

02-04	Motor Rated Voltage
Range	【230V: 170.0~264.0 / 400V: 323.0~528.0】
02-05	Motor Rated Power
Range	【0.1~37.0】
02-06	Motor Rated Frequency
Range	【0~650.0】
02-07	Motor Pole Number
Range	【2~ 16】
02-14	Auto Tune
Range	【0】: Disable 【1】: Enable

02-15	Stator Resistance Gain
Range	----
02-16	Rotor Resistance Gain
Range	----

Notes:

- For vector mode, set parameter 00-00=【1】, next set the motor nameplate data in parameters 02-01, 02-03~02-06 and activate the auto tune function by setting parameter 02-14 = 1.
- The auto tuning function determines the best motor performance based on the motor connected.
- During the Auto tune. “AT” will be displayed on the inverter and auto tuning results (motor parameter) will be stored in parameters 02-15~02-16.
- After a successful auto tune function the display will return to command frequency display.
- Auto tune function must be performed again when the motor is replaced.

03-External Digital Inputs and Relay Output Functions

03-00	**Multifunction Input Term. S1**
03-01	**Multifunction Input Term. S2**
03-02	**Multifunction Input Term. S3**
03-03	**Multifunction Input Term. S4**
03-04	**Multifunction Input Term. S5**
03-05	**Multifunction Input Term. S6**
Range	**【0】:Forward/Stop Command**---------- **(**Parameters **00-02/00-03=1**& **00-04)** **【1】:Reverse/Stop Command**---------- **(**Parameters **00-02/00-03=1**& **00-04)** **【2】:Speed Selection 1** **【3】:Speed Selection 2** **【4】:Speed Selection 3** **【5】:Speed Selection 4** **【6】:JOG Forward Command**----------**(** Parameters **00-18~00-20)** **【7】:JOG Reverse Command**----------**(** Parameters **00-18~00-20)** **【8】:Up Command**---------**(** Parameters **00-05/00-06=4**& **03-06/03-07)** **【9】:Down Command**-----**(** Parameters **00-05/00-06=4**& **03-06/03-07)** **【10】: 2nd Acc/Dec Times** **【11】: Disable Acc/Dec** **【12】: Main/ Alternative Run Source Selec**t----**(** Parameters **00-02/00-03)** **【13】: Main/ Alternative Frequency Command Select**----**(** Parameters **00-05/00-06)** **【14】: Rapid Stop (controlled deceleration stop)** **【15】: Base Block (Coast to stop)** **【16】: Disable PID Function** ----------**(** Parameter **Group 10)** **【17】: Reset** **【18】: Enable Auto Run Mode**----------**(** Parameter **Group 6)** **【19】: Speed Search** **【20】: Energy Saving(V/F)** **【21】: Reset PID integral value to Zero** **【22】: Counter Input** **【23】: Counter Reset** **【24】: PLC Input** **【25】: Pulse Input-Width Measure (S3)** **【26】: Pulse Input-Frequency Measure (S3)** **【27】: Enable KEB Function** **【28】: Fire mode function (Valid for software issued after rev. 1.1)**

03-0X =【0**】:** 2-wire control: forward operation

03-0X =【1**】:** 2-wire control: reverse operation. Refer to the 2-wire operation mode

2-Wire control method

Example: FWD/STOP and REV/STOP from two inputs (S1 & S2)

Set 00-04=【0】; S1:03-00=【0】 (FWD/STOP); S2:03-01=【1】 (REV/STOP);

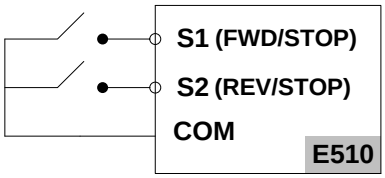

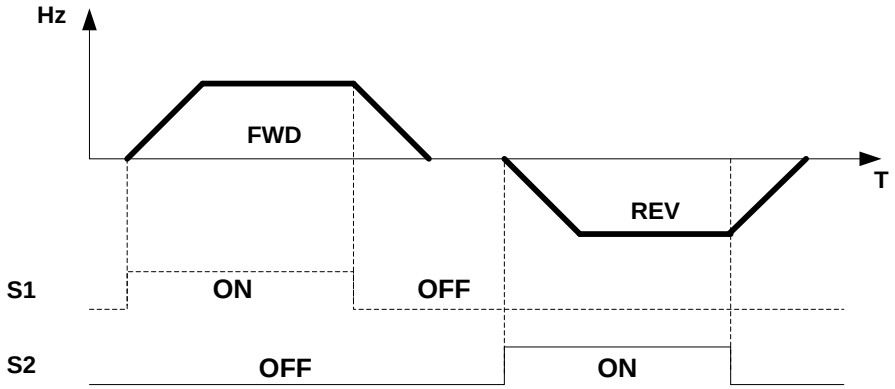

Note: If both forward and reverse commands are active the inverter treats this as a STOP command.

3-Wire control method

Example: Two separate push buttons for RUN & STOP and two position selector switch for FWD/REV

Set 00-04 =【2】, (3 wire control mode), to set terminals S1, S2 and S3 for 3-Wire control

When 3-Wire control mode is selected the setting for parameters 03-00, 03-01 and 03-02 are not active.

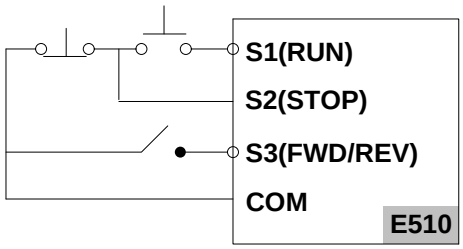

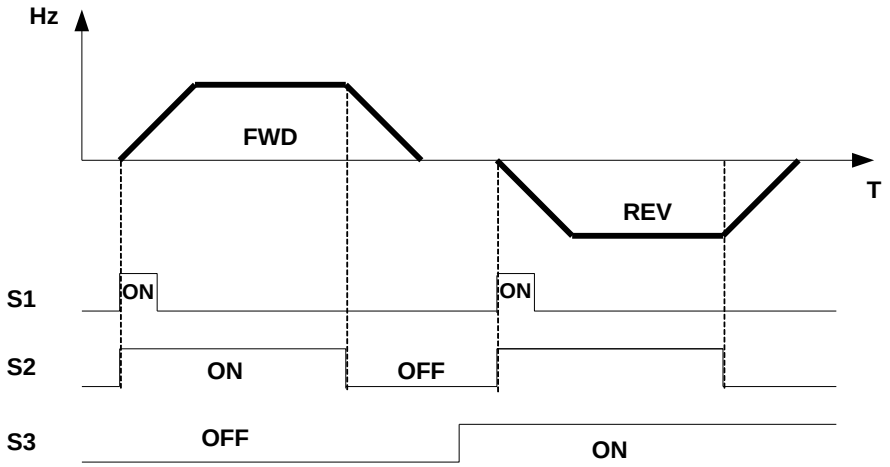

03-00~03-05 =【5, 4, 3, 2**】**Preset speed selections

Digital input S1 to S6 can be used to select between 16 different preset speeds (Preset speed 0 to 15).

Four speed selection bits are available and can be assigned to any of the digital input. The selected preset speed is based on the combination of the speed selection bits shown in the table below.

Example: Input S3 set for speed selection 1 bit, [03-02] = 2, Input S4 set for speed select 2 bit, [03-03] = 3, Input S5 set for speed select 3 bit, [03-04] = 4 and input S6 set for speed select 4 bit, [03-05] = 5.

Preset speed	Function setting and state of any of the four inputs S1 ~ S6				Preset Frequency	Acceleration time	Deceleration time
	Speed Select 4 (Sx=5)	Speed Select 3 (Sx=4)	Speed Select 2 (Sx=3)	Speed Select 1 (Sx=2)			
speed **0**	OFF	OFF	OFF	OFF	05-01	05-17	05-18
speed **1**	OFF	OFF	OFF	ON	05-02	05-19	05-20
speed **2**	OFF	OFF	ON	OFF	05-03	05-21	05-22
speed **3**	OFF	OFF	ON	ON	05-04	05-23	05-24
speed **4**	OFF	ON	OFF	OFF	05-05	05-25	05-26
speed **5**	OFF	ON	OFF	ON	05-06	05-27	05-28
speed **6**	OFF	ON	ON	OFF	05-07	05-29	05-30
speed **7**	OFF	ON	ON	ON	05-08	05-31	05-32
speed **8**	ON	OFF	OFF	OFF	05-09	05-33	05-34
speed **9**	ON	OFF	OFF	ON	05-10	05-35	05-36
speed **10**	ON	OFF	ON	OFF	05-11	05-37	05-38
speed **11**	ON	OFF	ON	ON	05-12	05-39	05-40
speed **12**	ON	ON	ON	ON	05-13	05-41	05-42
speed **13**	ON	ON	ON	ON	05-14	05-43	05-44
speed **14**	ON	ON	ON	ON	05-15	05-45	05-46
speed **15**	ON	ON	ON	ON	05-16	05-47	05-48

03-0X =【06】: Forward jog run command, uses jog frequency parameter 00-18.

Note:

- Jog command has a higher priority than other frequency reference commands.
- Jog command uses stop mode set in parameter 07-09 when Jog command is active > 500ms.

03-0X =【07】: Reverse jog run command, uses jog frequency parameter 00-18.

Note:

- Jog command has a higher priority than other frequency reference commands.
- Jog command uses stop mode set in parameter 07-09 when Jog command is active > 500ms.

Note: If Forward and Reverse Jog are active at the same time the inverter enters stop mode.

03-0X =【08】: UP frequency command; set parameter 00-05 Frequency command to 4 to activate. When ON frequency reference increased by value set in parameter 03-06. If the input is kept on continuously, the frequency command increases accordingly until the upper frequency limit is reached.

03-0X =【09】: Down frequency command; set parameter 00-05 Frequency command to 4 to activate. When ON frequency reference decreased by value set in parameter 03-06. If the input is kept on continuously, the frequency command decreases accordingly and in relation to settings for parameter 03-06 and 3-07 until zero speed is reached.

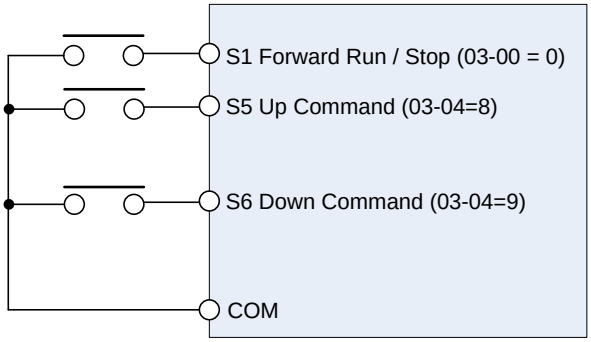

UP Command (Terminal S5)	1	0	0	1
Down Command (Terminal S6)	0	1	0	1
Operation	Accel (UP)	Decel (DWN)	Hold	Hold

03-00~03-05=【10】 2nd Acc/Dec time

When active the acceleration and deceleration time will be set according to value set in parameter 00-16 (acceleration time 2) and 00-17 (deceleration time 2).

When not-active the acceleration and deceleration time will be set according to value set in parameter 00-14(acceleration time 1) and 00-15 (deceleration time 1).

Example: 00-12 (Frequency upper limit) =60Hz
03-00= 0 (Terminal S1 FWD/STOP)
00-14 (accelerating time 1) = 10 sec
00-16 (accelerating time 2) =5 sec

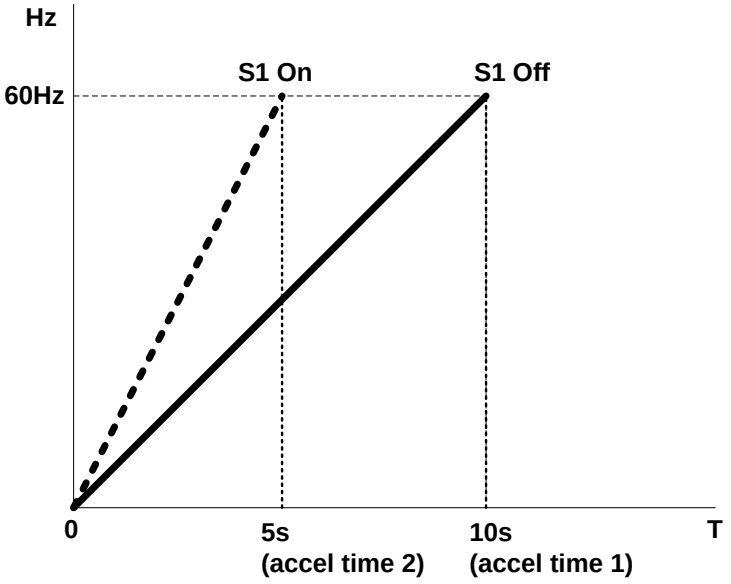

03-00~03-05=【11】Disable Acc/Dec function

When activated suspends the acceleration / deceleration operation and maintains the output frequency at current level.

Accel/Decel & Enable/Disable timing diagram using terminal S1 and parameter 03-00 = 11.

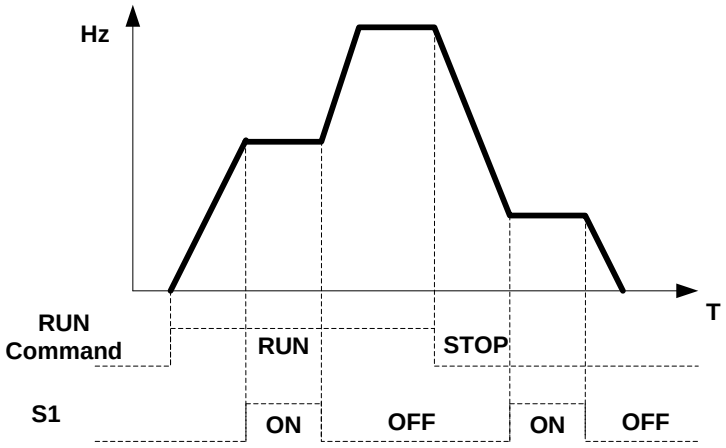

03-00~03-05=【12】Main / Alternative Run Source Select

When active, the run command source is set by parameter 00-03(Alternative Run source). When Input is off run command source is set by parameter 00-02 (Main run source).

03-00~03-05=【13】Main/ Alternative Frequency Source Select
When active the Alternative Frequency Source parameter 00-06 is used, otherwise Main Frequency Source is used parameter 00-05.

03-00~03-05=【14】Rapid Stop (controlled deceleration stop)
When active inverter decelerates to stop using deceleration time 2.

03-00~03-05=【15】Base Block (Coast to stop)
When active the inverter output is turned off.

03-00~03-05=【16】Disable PID Function
When active PID function is disabled.

03-00~03-05=【17】Reset
When active inverter resets active fault (same function as the Reset button on the keypad).

03-00~03-05=【18】Auto _ Run Mode
When active the programmable auto- sequencer function is enabled, Refer to description of parameter group 6.

03-00~03-05=【19】Speed Search Stop
When active the inverter performs a speed-search by detecting the current speed of the motor and accelerating from there to the target speed.

03-00~03-05=【20】Energy-saving operation
When active the inverter output voltage is gradually decreased to match the required torque demand and as a result saves energy. Only for variable torque applications such as fans and pumps that require less torque when operation speed is reached. When input is turned off the output voltage gradually increases again back to the original output voltage.

Note: Acceleration and deceleration times in energy saving operation is identical to that of speed search operation.

03-00~03-05=【21】Reset PID Integral value to Zero
When active resets the PID integral value zero.

03-00~03-05=【22】Counter Input
Input used as counter input, set related parameters 03-21 ~03-22.
Count status can be viewed by setting parameter 12-00 to 8

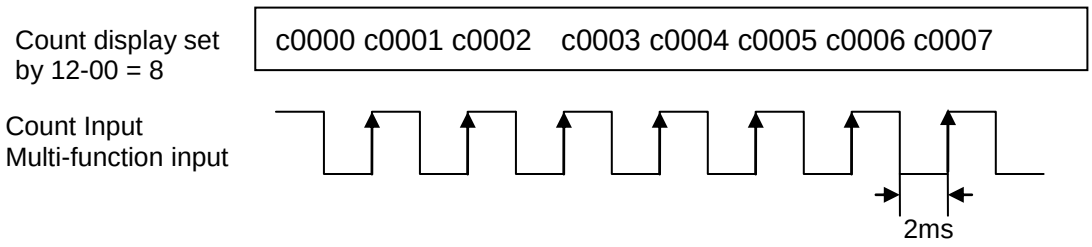

03-00~03-05=【23】Counter Reset
When active resets counter to 0.

03-00~03-05=【24】PLC Input
Input used for PLC logic.

03-02=【25】Pulse Input-Width Measure (**Available for S3 Input only**)
When 03-02=25, S3 is used for pulse width measurement.

Related parameters:

00-05=7 (Pulsed Speed Control)
03-27= 0.01~0.20 kHz (Pulse Input Frequency)
03-28=0.01~9.99
Inverter Frequency = duty cycle x (00-12) x (03-28) Hz (Limited by the Frequency Upper limit)

To adjust speed through pulse input duty cycle, set parameters as follows:
00-05=7; 03-02=25; 03-27=pulse input frequency; 03-28=1 (as per actual need)

When pulse input frequency is 200Hz, set 03-27=0.20 (must be correct). Along with the duty cycle of this 200Hz pulse input, inverter frequency is varied.

Example 1:

Pulse input frequency is 200Hz (03-27=0.20), duty cycle is 50%, frequency upper limit 50Hz (00-12=50.00), and 03-28=1. Inverter frequency is 50% x 50.00 x 1 = 25.00 Hz

Example 2:

Pulse input frequency is 100Hz (03-27=0.10), duty cycle is 30%, frequency upper limit 50Hz (00-12=50.00), and 03-28=2. Inverter frequency is 30% x 50.00 x 2 = 30.00 Hz

Example 3:

Pulse input frequency is 100Hz (03-27=0.10), duty cycle is 15%, frequency upper limit 650Hz (00-12=650.00), and 03-28=5. Inverter frequency is 15% x 650.00 x 5 = 487.50 Hz

Notes:
- In this mode, pulse input frequency range is 0.01 kHz to 10.00 kHz.
- The examples above are based on a NPN input configuration. If PNP is used, the relationship between duty cycle and inverter frequency is reversed, so a 20% duty cycle equals 80% inverter frequency

03-02=【26】Pulse Input-Frequency Measure (S3)
When 03-02=26, S3 is used for frequency measurement.

Related Parameters:

00-05=7 (Pulsed Speed Control)
03-02=26 (S3 is the pulse input- frequency measurement)
03-28=0.01~9.99

Inverter Frequency = f x (3-28) Hz, f: Pulse Input Frequency Hz (Limited by the Frequency Upper limit)

Set the following parameters to use pulse input for speed command:

00-05=7
03-02=26
03-28=1 (adjust if required)
03-27: Not used.

Example 1:
Pulse input frequency is 20Hz, frequency upper limit is 50Hz (00-12=50.00), and 03-28=1.
Inverter frequency is 20.00Hz

Example 2:
Pulse input frequency is 45Hz, frequency upper limit is 50Hz (00-12=50.00), and 03-28=1.
Inverter frequency is 45.00Hz

Example 3:
Pulse input frequency is 55Hz, frequency upper limit is 50Hz (00-12=50.00), and 03-28=1.
Inverter frequency is 50.00Hz

Example 4:
Pulse input frequency is 2000Hz, frequency upper limit is 650Hz (00-12=650.00), and 03-28=0.2.
Inverter frequency is 2000 x 0.2 = 400.00Hz

Notes:
- In this mode, pulse input frequency range is 0.01 kHz to 200Hz.
- Pulse input can only be selected for terminal S3
- PLC common is COM terminal on TM2

03-00~03-05=【27】 Enable KEB Function
When active enables KEB (Kinetic Energy Braking) during acceleration. Refer to the parameter description of 07-14.

03-00~03-05=【28】Fire Mode Function
When active inverter runs at maximum speed (parameter 00-12) ignoring any protective functions. Fire Mode function can be used for applications following a fire where it is necessary for a motor to continue running without interruption.

Example: Smoke exhaust fans used in buildings for fire evacuation.

⚠Caution

- The correct use of this function is the responsibility of the installer of the fire safety system. TWMC bares no responsibility for direct or indirect damages or loss incurred as a result of using this function.
- Warranty is void when inverter damage is caused by using Fire Mode.

Notes:

- To enable Fire Mode function set parameter 08-17 = 1
- The fire Mode function is activated by using one of the multifunction inputs S1 to S6 to a value of 28. (Parameter 03-00~03-05).
- Fire mode can also be enabled by setting the functions of S1 to S6 via communication.

When Fire Mode is active:

- The keypad shows FIrE, and Fire Mode activation is recorded in the inverter fault log.
- The inverter will run up to the maximum frequency set in 00-12.
- The inverter will keep running unless main power is lost or the inverter breaks down.
- When Fire Mode is activated, all protection functions and alarms (e.g. ES, BB, OV, OC …), will be ignored.
- STOP key on the keypad is disabled during Fire Mode operation.
- To reset fire mode: turn power off, remove fire mode input signal, and power-up inverter.

03-06	Up/Down Frequency Step
Range	【0.00~5.00】Hz

Example: S1: 03-00=【8】Up frequency command, S2: 03-01=【9】Down frequency command, 03-06=【△】Hz

Mode1: UP or DOWN input terminals are turned on for less than 2 sec. The operation frequency changes by △ Hz (03-06) each time the input terminal is closed.

Mode 2: If UP or DOWN input terminals are closed for more than 2 sec, the original UP/DOWN mode is active and the output frequency ramps up or down as long as the input is kept ON.

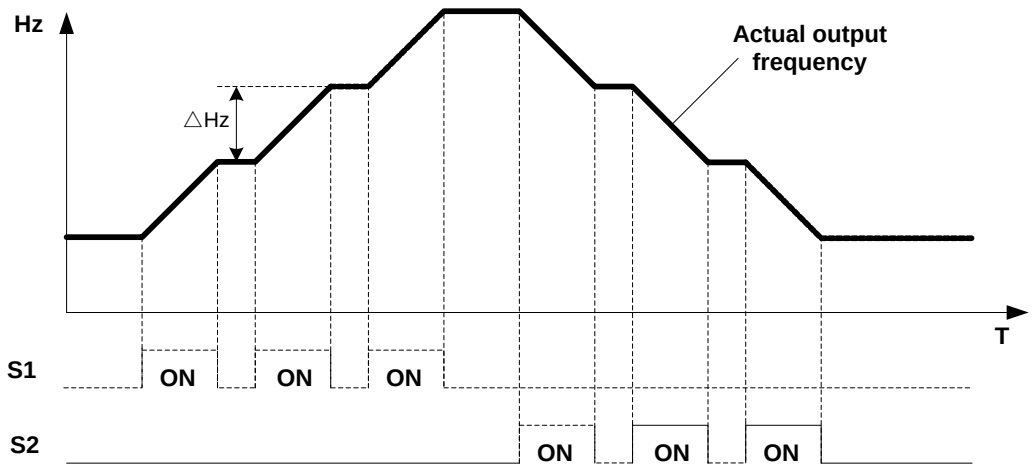

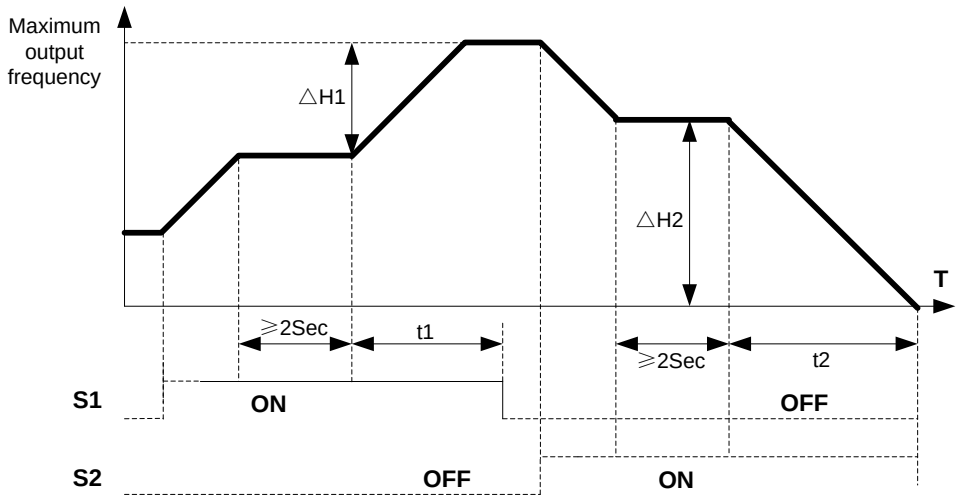

03-07	Up/Down Keep Frequency Status after Stop Command
Range	【0】: After a stop command in Up/Down mode, the preset frequency is held as the inverter stops, and the UP/Down function is disabled. 【1】After a stop command in Up/Down mode, the preset frequency is reset to 0 Hz when the inverter stops. 【2】: After a stop command in Up/Down mode,, the preset frequency is held when the inverter stops and the UP/Down function remains active.

- 03 - 07 =【0】, When run signal is removed (Stop Command), the output frequency is stored in parameter 05-01 (Keypad Frequency).
- 03 - 07 =【0】, When stopped the frequency reference is set by parameter 05-01.
- 03 - 07 =【1】, In Up/down frequency mode inverter will ramp up from 0Hz on Run command and Ramp down to 0 Hz on stop command.

03-08	Multifunction terminals S1~S6 scan time
Range	【1~200】2ms

Set the digital input CPU scan time. The digital input signal needs to be present for the minimum scan time to qualify as a valid command.

Notes:

- For noisy environments select scan time of 8ms (results in a slower response time).
- Terminal SF is for safety switch, SF can cut off the inverter voltage output.

03-09	S1~S5 Input Type Selection NO & NC
Range	【xxxx0】:S1 NO 【xxxx1】:S1 NC 【xxx0x】:S2 NO 【xxx1x】:S2 NC 【xx0xx】:S3 NO 【xx1xx】:S3 NC 【x0xxx】:S4 NO 【x1xxx】:S4 NC 【0xxxx】:S5 NO 【1xxxx】:S5 NC
03-10	S6 Input Type Selection NO & NC
Range	【xxxx0】:S6 NO 【xxxx1】:S6 NC

- “NO”: Normally open, “NC”: Normally closed. . Select as required
- For selecting Normally Open (NO) or Normally Closed (NC) set the relevant digit in parameter 03-09/03-10 to 0 or 1 as required.
- In order to enable parameters 03-09/03-10, set 03-20 = 1 (internal control) beforehand.
- Set Parameter 03-09 first before using parameters 00-02/00-03=1 (run mode from External input).

Example: To select S1, S2 as NC and S3, S4, S5 as NO, set 03-09 = 00011

03-11	**Multifunction Output Relay RY 1 functions. (Terminals R1C,R1B, R1A)**
03-12	**Multifunction Output Relay RY 2 functions. (Terminals R2B, R2A)**
Range	**【0】:Run** **【1】:Fault** **【2】:Set Frequency within the preset range. ----------(refer to 03-14)** **【3】:Set Frequency reached. As set by (3-13±3-14) ---------- (refer to 03-13/03-14)** **【4】:Output Frequency Detection 1 (> 03-13) ----------(refer to 03-13)** **【5】:Output Frequency Detection 2 (< 03-13) ----------(refer to 03-13)** **【6】:Auto-restart** **【7】:Momentary AC Power Loss----------(** refer to **07-00)** **【8】:Rapid Stop (Decelerate to Stop)** **【9】:Base Block Stop Mode** **【10】:Motor Overload Protection (OL1)** **【11】:Drive Overload Protection (OL2)** **【12】:Over Torque Threshold Level (OL3)** **【13】:Preset Current level Reached ----------(** refer to **03-15/03-16)** **【14】:Preset Brake Frequency Reached -----(**refer to **03-17/03-18)** **【15】:PID Feedback Signal Loss** **【16】:Single pre-set count (3-22)** **【17】:Dual pre-set count (3-22~23)** **【18】:PLC status indicator (00-02)** **【19】:PLC control** **【20】:Zero Speed**
03-13	**Frequency Reached Level**
Range	**【0.00~650.00】 Hz**
03-14	**Frequency Reached Detection Range (±)**
Range	**【0.00~30.00】 Hz**

Output relay RY function descriptions:

03-11/03-12 =【0】: Run
Output is active when run command is ON or output frequency is greater than 0

03-11/03-12 =【1】: Fault
Output is active during fault condition.

03-11/03-12 =【2】Set Frequency within the preset range
Output is active when the output frequency falls within the frequency reference minus the frequency detection width (03-14).

When Output Freq. = Preset Freq. Reached Setting (03-13) － Preset Freq. Reached Detection Range (03-14), Relay Output will be ON

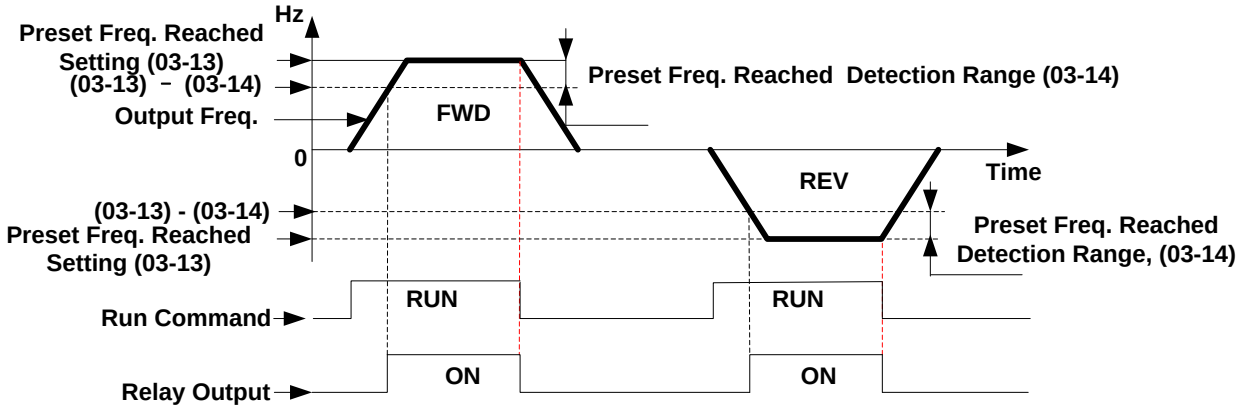

Example: Sets 03-13=30 and 03-14=5, Relay is ON when output frequency is >=25Hz and <= 30Hz.

03-11=【3】: Set Frequency reached

Output is active when the output frequency falls within the frequency detection width (03-14) of the set frequency detection level (o3-13).

When, Freq. Detection Range Lower Limit**<Setting Freq.<**Freq. Detection Range Upper Limit and Detection Range Lower Limit**<Output Freq.<**Freq. Detection Range Upper Limit

Relay output is ON（Allowable tolerance ±0.01）

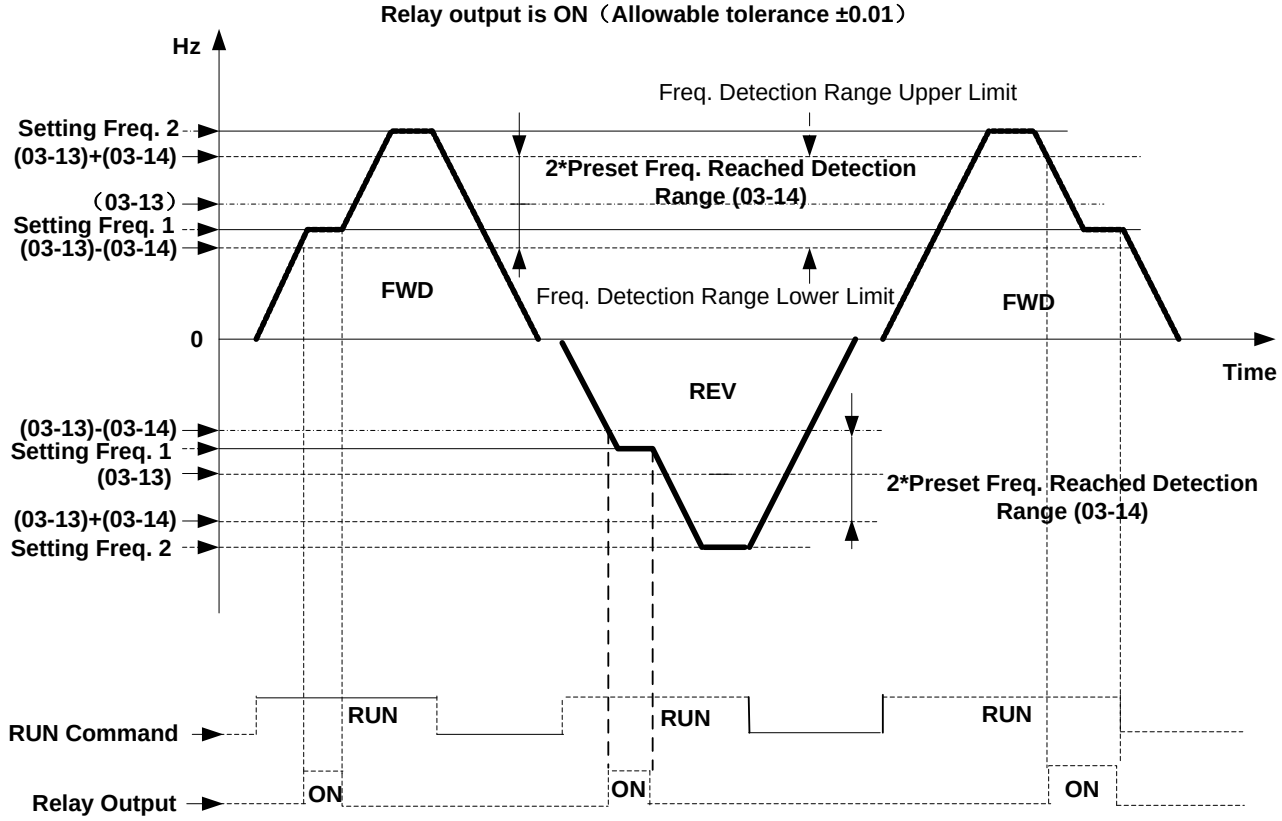

03-11=【4】: Output Frequency Detection 1

Output is active when the output frequency rises above the frequency detection level (03-13) and deactivates when the output frequency falls below frequency detection level (03-13).

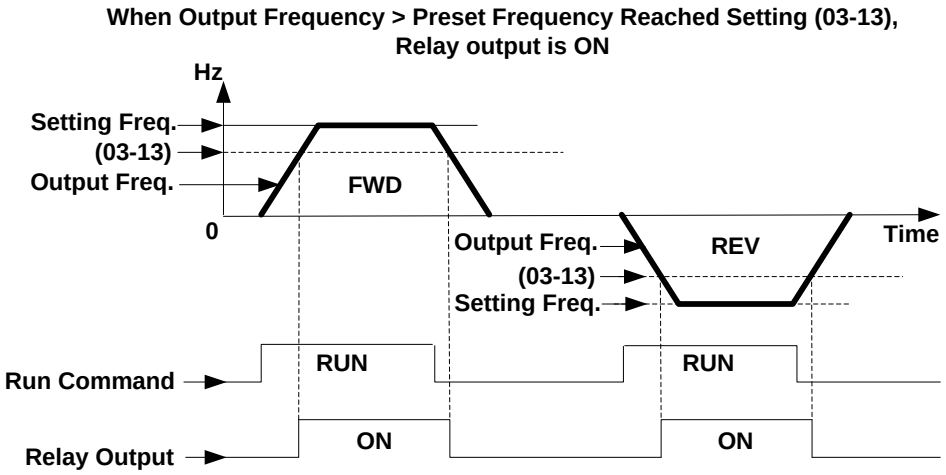

03-11=【5】: Output Frequency Detection 2

Output is active when the output frequency is below the frequency detection level (03-13) and turns off when the output frequency falls below frequency detection level (03-13).

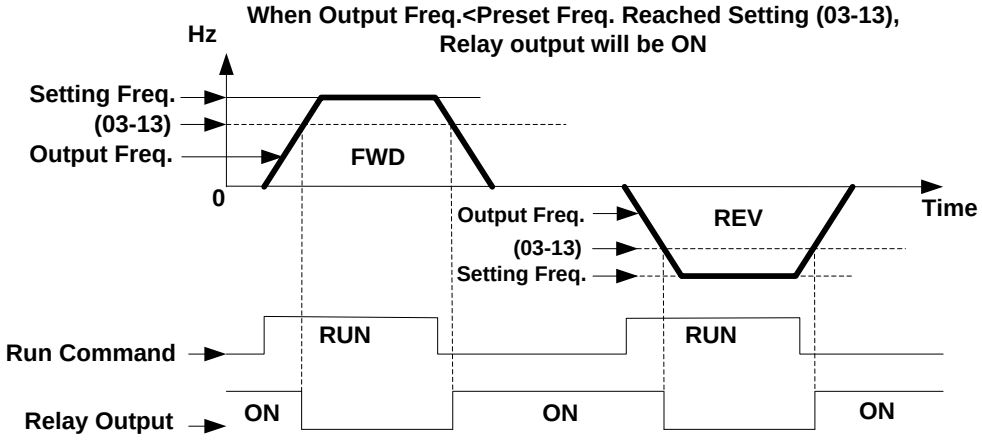

03-11/03-12=【20】: Zero Speed

Off	Output Frequency => Minimum Frequency (01-08, Fmin)
On	Output Frequency < Minimum Frequency (01-08, Fmin)

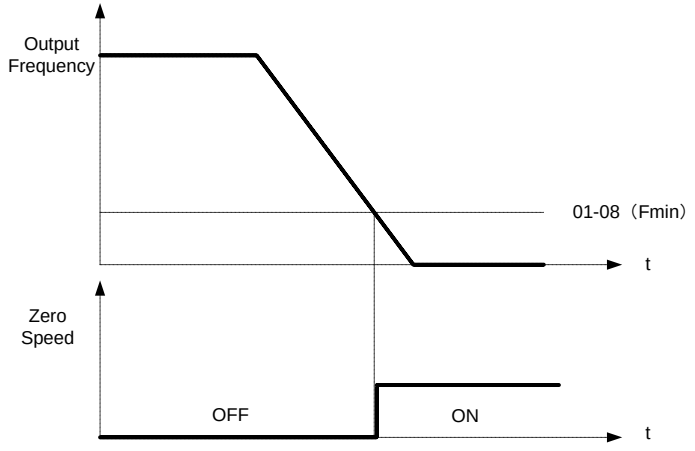

03-15	Preset output current reached
Range	【0.1~15.0】 A
03-16	Preset output Current detection delay Time
Range	【0.1~10.0】 Sec

03-11=【13】: Preset Current level Reached
Relay output active when output current > preset current setting (03-15).
03-15: Setting range (0.1~15.0 Amps) set as required based on rated motor current.
03-16: Setting range (0.1~10.0) unit: seconds

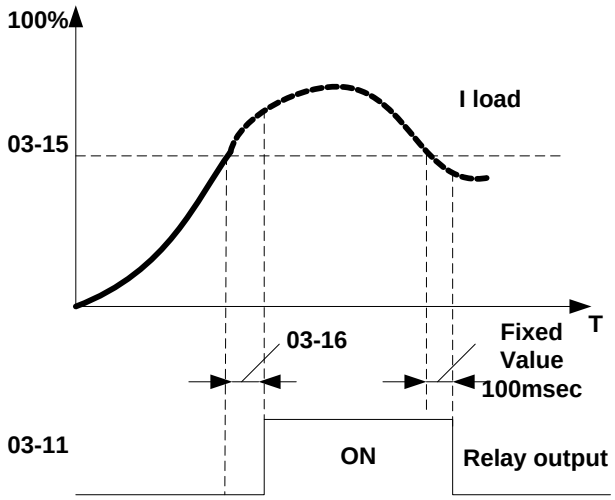

03-17	Brake Release Level
Range	【0.00~20.00】 Hz
03-18	Brake Engage Level
Range	【0.00~20.00】 Hz

03-11 =【**14**】: Preset Brake Frequency Reached

During accelerating output relay is active when the output frequency reaches the external Brake release level set by parameter 03-17. In decelerating mode output relay turns OFF when the actual output frequency reaches the external Brake engage level set by parameter 03-18.

Timing diagram for 03-17 **≤** 03-18

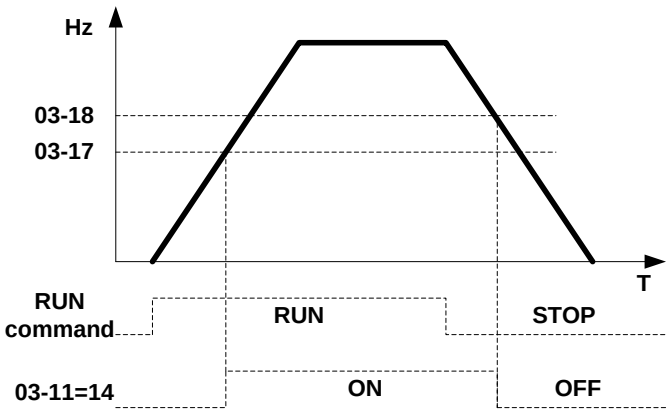

Timing diagram for 03-17 **≥** 03-18

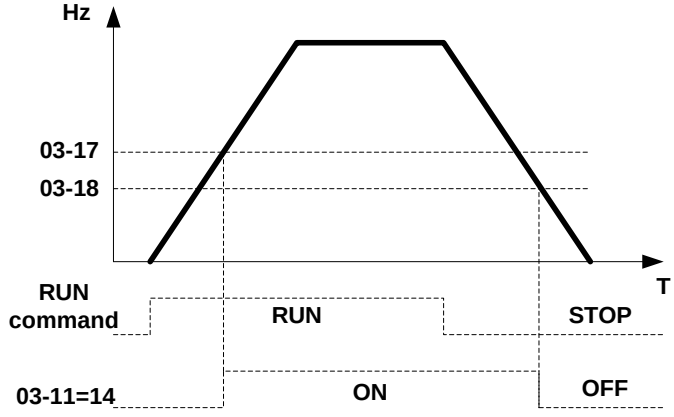

03-19	Relay Output Status Type
Range	【0】:A (Normally open) 【1】:B (Normally closed)

When 03-19=0, and conditions in parameter 03-11, 03-12 are met, relay contact is closed, otherwise relay contact is open.
When 03-19=1, and conditions in parameter 03-11, 03-12 are met, relay contact is open, otherwise relay contact is closed.

03-20	Internal / External Multi-Function Input Terminal Selection
Range	【0~63】
03-21	Action to Set the Internal Multi-Function Input Terminals
Range	【0~63】

Parameter 03-20 allows users to select between external and internal control for multi-function inputs S1-S6. Set to 1 for internal control and 0 for external control.

The input selection is based on its decimal value.

DI	S6	S5	S4	S3	S2	S1
Binary	2^5	2^4	2^3	2^2	2^1	2^0
Decimal	32	16	8	4	2	1

The definition of bits in 03-20:

03-20= 0 0 0 0 0 0 **0:** external control (uses parameter 03-00 to 03-05).
S6 S5 S4 S3 S2 S1 **1:** internal ON/OFF status control set by parameter 03-21.

The definition of bits in 03-21:

03-21= 0 0 0 0 0 0 **0:** Internal multi-function input terminal is OFF.
S6 S5 S4 S3 S2 S1 **1:** Internal multi-function input terminal is ON.

Example: Control S2, S4, S6 internally.

1. Set 03-20 = 42 (2+8+32) to set S2, S4 and S6 for internal control, binary representation 101010.
2. Set 03-21 = 10 (2+8), to turn on S2 and S4, binary representation 001010.

03-22	Pre-set count 1
Range	【0~9999】
03-23	Pre-set count 2
Range	【0~9999】

- The internal counter function can be used to count external pulses and activate RY1 & RY2 output relays to indicate pre-set count has been reached set in parameters 03-22 & 03-23.
- Internal counter counts can be checked against a single preset value or a both pre-set values.

S**ingle pre-set count**

- Set parameter 03-22 to the required pre-set count.
- To activate relays RY1 or RY2 for a single pre-set count set parameter 03-11 (RY1) or 03-12 (RY2) as required to 16.
- Pulse inputs at the selected terminal will increment the internal counter until the pre-set count in parameter 03-22 is reached and the selected Ry1 or Ry2 relay is **turned ON.**
- Removing the input signal when the pre-set count is reached will reset counter to zero and the selected relay is **turned OFF.**

Dual pre-set count

- Set 03-23 to **turn ON** the selected relay and Set parameter 03-22 to **turn OFF** the selected Relay.
- To activate relays RY1 or RY2 for a Dual pre-set count set parameter 03-11 (RY1) or 03-12 (RY2) as required to 17.
- Pulse inputs at the selected terminal increments the internal counter until the pre-set count in parameter 03-23 is reached and the selected RY1 or RYy2 relay is turned ON. When pulse counter reaches the pre-set count set in parameter 03-22 is reached RY1 or RY2 relay is turned OFF.
- Removing the input signal when the pre-set count is reached will reset counter to zero and the selected relay is turned OFF.
- 03-22 pre-set value must be greater than pre-set value of 03-23.

Example: Single and dual preset counts using RY1 and RY2

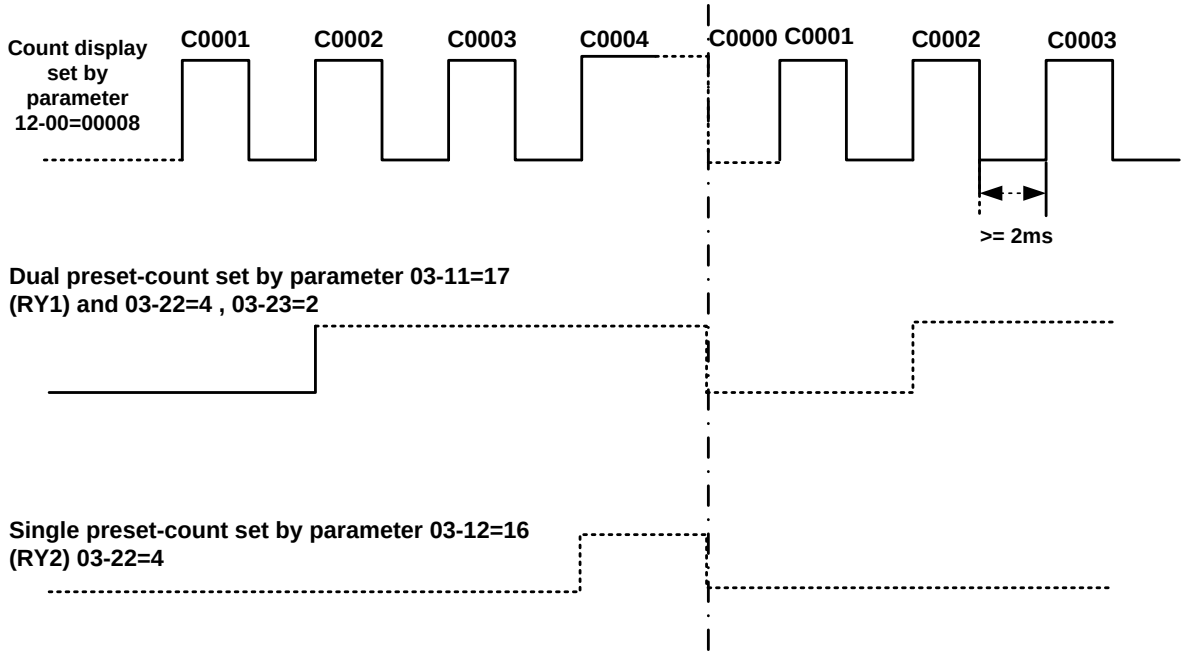

03-24	Output Under Current Detection
Range	【0】:Disable 【1】:Enable
03-25	Output Under Current Detection Level
Range	【5%~100%】
03-26	Output under Current Detection Delay Time
Range	【0.0~50.0s】

When 03-24 is set to 1 under current detection is enabled.
When under current detection is enabled and the output current falls below the under current detection level (03-25) for the time set in 03-26 an under current condition is detected and an ud-C fault is displayed.

03-27	Pulse Frequency
Range	【0.01~0.20】
03-28	Pulse Frequency Gain
Range	【0.01~9.99】

04-External Analog Signal Input / Output Parameters

04-00	Analog Voltage & Current Input Selections AI1/AI2	
	AI1	AI2
Range	【0】: 0~10V (0~20mA)	0~10V (0~20mA)
	【1】: 0~10V (0~20mA)	2~10V (4~20mA)
	【2】: 2~10V (4~20mA)	0~10V (0~20mA)
	【3】: 2~10V (4~20mA)	2~10V (4~20mA)

- Use JP2/JP3 to select analog signal type (voltage or current input).
- Parameter 04-00 must be set according to JP2 / JP3 setting.

Analog input scaling:

■ **Current Input Mode**

$$\text{AI (0~20mA)：F (Hz)} = \frac{\text{I (mA)}}{20(\text{mA})} \times (00-12)$$

$$\text{AI (4~20mA)：F (Hz)} = \frac{\text{I}-4(\text{mA})}{20-4(\text{mA})} \times (00-12), \text{I} \geq 4$$

■ **Voltage Input Mode**

$$\text{AI (0~10V)：F (Hz)} = \frac{\text{V(v)}}{10(\text{v})} \times (00-12)$$

$$\text{AI(2~10V)：F (Hz)} = \frac{\text{V}-2(\text{v})}{10-2(\text{v})} \times (00-12), \text{V} \geq 2$$

04-01	AI1 Signal Verification Scan Rate
Range	【1~200】2msec
04-02	AI1 Gain
Range	【0 ~ 1000】%
04-03	AI1 Bias
Range	【0~ 100】%
04-04	AI1 Bias Selection
Range	【0】: Positive 【1】: Negative
04-05	AI1 Slope
Range	【0】: Positive 【1】: Negative
04-06	AI2 signal verification Scan Rate
Range	【1~200】2msec
04-07	AI2 Gain
Range	【0 ~ 1000】%
04-08	AI2 Bias
Range	【0 ~ 100】%
04-09	AI2 Bias Selection
Range	【0】: Positive 【1】: Negative
04-10	AI2 Slope
Range	【0】: Positive 【1】: Negative

Set 04-01 and 04-06 for analog signal verification.

All analog inputs (AI1, AI2) have a 1st order programmable input filter that can be adjusted when noise is present on each of the incoming analog signal to prevent erratic drive control. Inverter reads the average values of A/D signal once per (04-01/04-06 x 2ms).

Note: Increasing the filter time causes the drive operation to become more stable but less responsive to change to the analog input.

AI1 Analog Voltage input scaling examples by adjusting Gain, Bias & Slope parameters (04-02~04-05)

(1) Positive Bias type (04-04= 0), Bias (04-03) and Slope (04-05).

Figure1:

	04-02	04-03	04-04	04-05
A	100%	50%	0	0
B	100%	0%	0	0

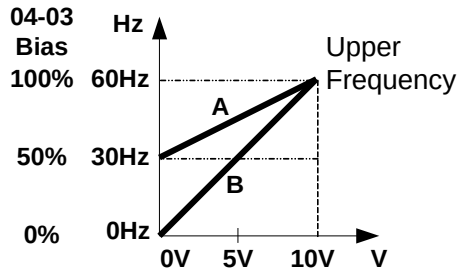

Figure2:

	04-02	04-03	04-04	04-05
C	100%	50%	0	1
D	100%	0%	0	1

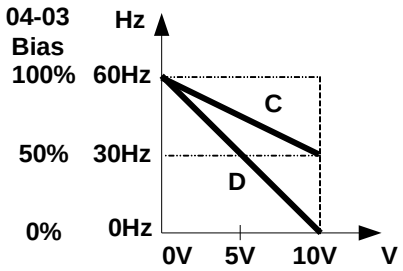

(2) **Negative Bias type** (04-04= 1), Bias (04-03) and Slope (04-05).

Figure3:

	04-02	04-03	04-04	04-05
E	100%	20%	1	0

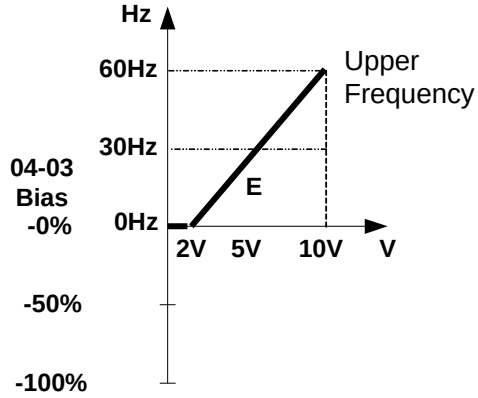

Figure4:

	04-02	04-03	04-04	04-05
F	100%	50%	1	1

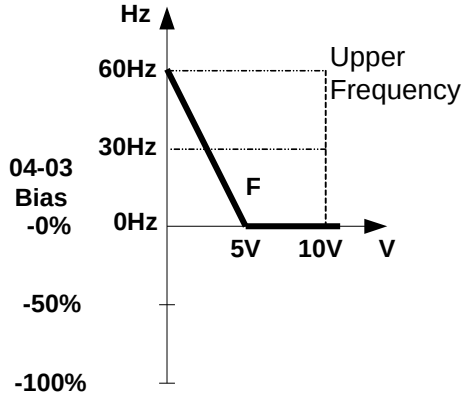

(3) Offset bias set to 0% (04-03) and effect of modifying Analog Gain (04-02), Bias type (04-04) and slope type (04-05) are shown in shown Fig 5&6.

Figure5:

	04-02	04-03	04-04	04-05
A'	50%	0%	0/1	0
B'	200%	0%	0/1	0

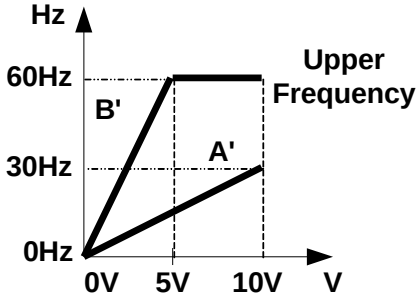

Figure6:

	04-02	04-03	04-04	04-05
C'	50%	0%	0/1	1
D'	200%	0%	0/1	1

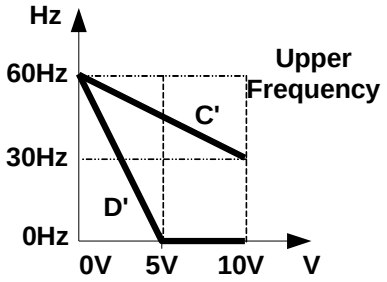

(4) Various other examples of analog input scaling and modification are shown in following figures 7,8,9 & 10.

Figure7:

	04-02	04-03	04-04	04-05
a	50%	50%	0	0
b	200%	50%	0	0

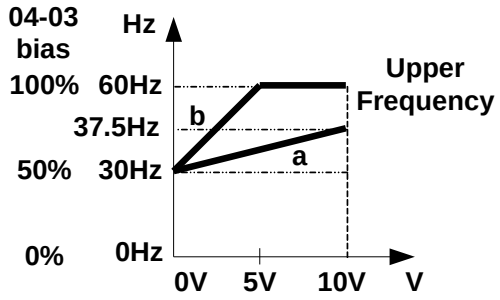

Figure8:

	04-02	04-03	04-04	04-05
c	50%	50%	0	1
d	200%	50%	0	1

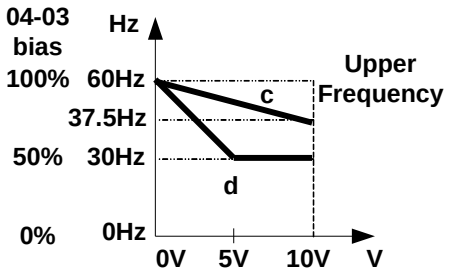

Figure9:

	04-02	04-03	04-04	04-05
e	50%	20%	1	0
f	200%	20%	1	0

Figure10:

	04-02	04-03	04-04	04-05
g	50%	50%	1	1
h	200%	0%	0	1

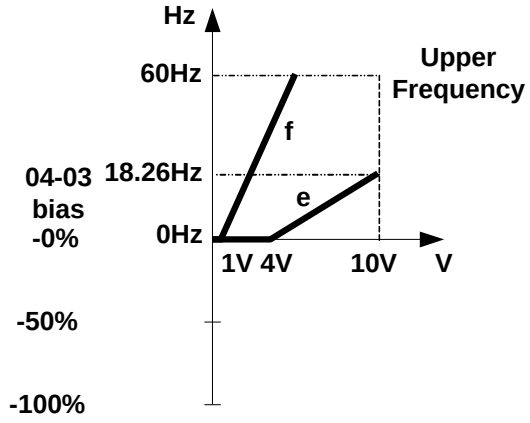

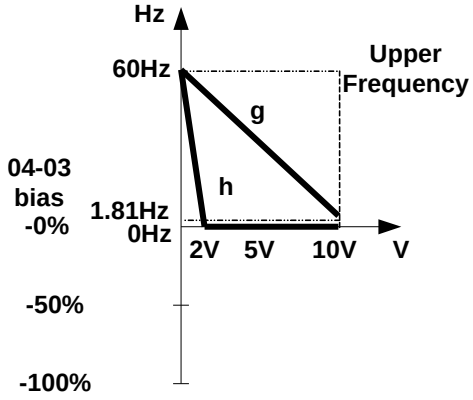

04-11	Analog Output (AO) Function Selection.
Range	【0】:Output Frequency 【1】:Frequency Command 【2】:Output Voltage 【3】:DC Bus Voltage 【4】:Output Current

Example: Set 04-11 as required according to the table below.

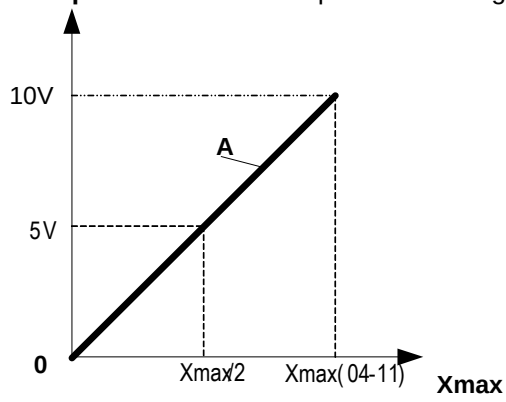

04-11	A	Xmax
【0】	Output frequency	upper frequency limit
【1】	Frequency Setting	upper frequency limit
【2】	Output voltage	Motor Rated Voltage
【3】	DC Bus Voltage	230V: 0~400VDC 460V: 0~800VDC
【4】	Output current	rated current of inverter

04-12	AO Gain
Range	【0 ~ 1000】%
04-13	AO Bias
Range	【0 ~ 100】%
04-14	AO Bias Selection
Range	【0】: positive 【1】: Negative
04-15	AO Slope
Range	【0】: positive 【1】: Negative
04-16	F-Gain
Range	【0】: Invalid 【1】: Effective

- Set Analog output function (04-11).
- Output level is 0-10Vdc.
- Output voltage level can be scaled and adjusted with parameters 04-12 to 04-15 if needed.

- The analog output scaling is the same as examples shown previously for Analog Voltage Input (AI1) parameters 4-02 to 4-05.

Note: The max output voltage is 10Vdc based on the inverter hardware. Use external devices that require a maximum of 10Vdc signal.

F-Gain Function:

The F- Gain function offers the ability to use a single frequency reference set by a master potentiometer to more than one inverter. The master frequency can be scaled by three individual potentiometers for each inverter as show in the diagram below.

To enable set parameter 04-16=1 and set parameter 00-05 =2 (external Analog input AI1). Analog input 2 (AI2) can now be used for external scaling (potentiometer).

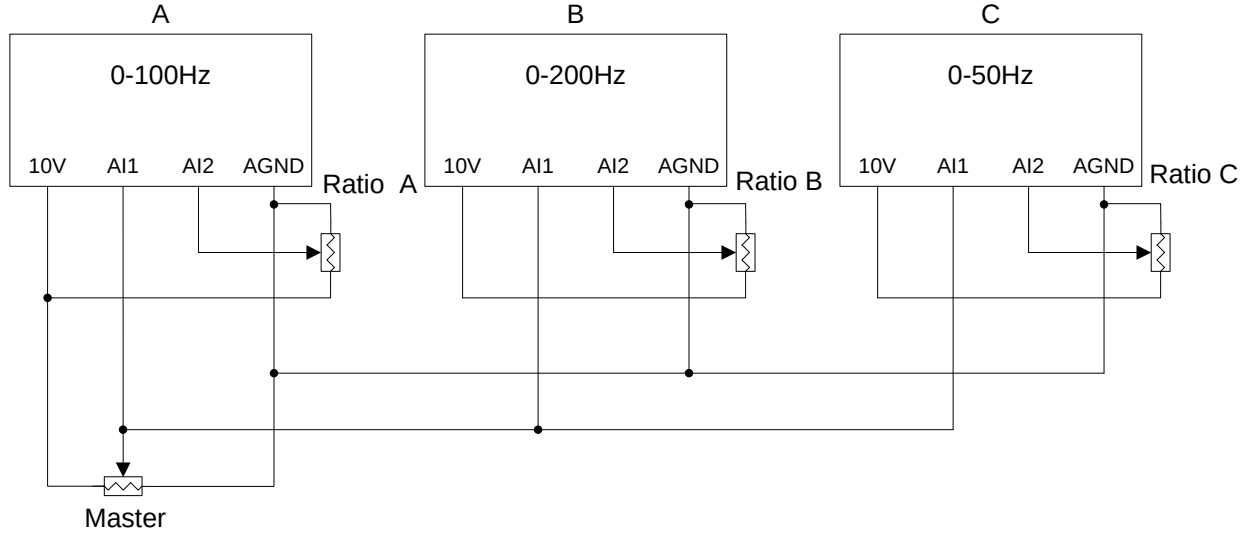

Parameter Preset:

A	B	C
00-05=2	00-05=2	00-05=2
00-12=100	00-12=200	00-12=50
04-16=1	04-16=1	04-16=1

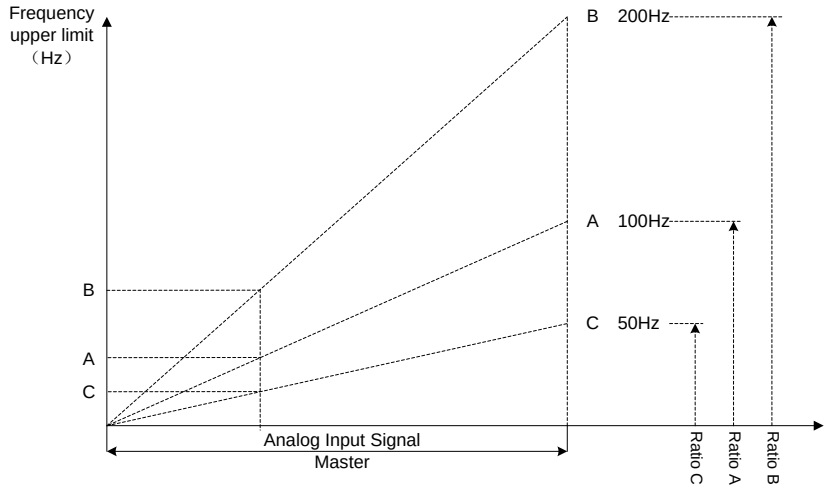

05-Preset Frequency Parameters

05-00	**Preset Speed Control mode Selection**
Range	**【0】: Common Accel/Decel** **【1】: Individual Accel/Decel for each preset speed 0-15**
05-01	**Preset Speed 0 (Keypad Frequency)**
05-02	**Preset Speed 1**
05-03	**Preset Speed 2**
05-04	**Preset Speed 3**
05-05	**Preset Speed 4**
05-06	**Preset Speed 5**
05-07	**Preset Speed 6**
05-08	**Preset Speed 7**
05-09	**Preset Speed 8**
05-10	**Preset Speed 9**
05-11	**Preset Speed 10**
05-12	**Preset Speed 11**
05-13	**Preset Speed 12**
05-14	**Preset Speed 13**
05-15	**Preset Speed 14**
05-16	**Preset Speed 15**
Range	**【0.00 ~ 650.00】 Hz**
05-17	**Preset Speed 0 Acceleration time**
05-18	**Preset Speed 0 Deceleration time**
05-19	**Preset Speed 1 Acceleration time**
05-20	**Preset Speed 1 Deceleration time**
05-21	**Preset Speed 2 Acceleration time**
05-22	**Preset Speed 2 Deceleration time**
05-23	**Preset Speed 3 Acceleration time**
05-24	**Preset Speed 3 Deceleration time**
05-25	**Preset Speed 4 Acceleration time**
05-26	**Preset Speed 4 Deceleration time**
05-27	**Preset Speed 5 Acceleration time**
05-28	**Preset Speed 5 Deceleration time**
05-29	**Preset Speed 6 Acceleration time**
05-30	**Preset Speed 6 Deceleration time**
05-31	**Preset Speed 7 Acceleration time**
05-32	**Preset Speed 7 Deceleration time**
05-33	**Preset Speed 8 Acceleration time**
05-34	**Preset Speed 8 Deceleration time**
05-35	**Preset Speed 9 Acceleration time**
05-36	**Preset Speed 9 Deceleration time**
05-37	**Preset Speed 10 Acceleration time**
05-38	**Preset Speed 10 Deceleration time**
05-39	**Preset Speed 11Acceleration time**
05-40	**Preset Speed 11 Deceleration time**
05-41	**Preset Speed 12 Acceleration time**
05-42	**Preset Speed 12 Deceleration time**
05-43	**Preset Speed 13 Acceleration time**
05-44	**Preset Speed 13 Deceleration time**
05-45	**Preset Speed 14 Acceleration time**
05-46	**Preset Speed 14 Deceleration time**
05-47	**Preset Speed 15 Acceleration time**
05-48	**Preset Speed 15 Deceleration time**
Range	**【0.1 ~ 3600.0】 Sec**

05-00=0: Standard Acceleration and deceleration times parameters 00-14 ~ 00-17 apply to all preset speeds.

05-00=1: Each multi-speed uses a dedicated acceleration and deceleration time parameters 05-17 ~ 05-48. There are two different modes for acceleration / deceleration timing when 05-00 is set to 1, see time example on the next page.

Acceleration time calculation formula

$$\text{Time it takes to reach set frequency} = \frac{\text{Acceleration time x (set frequency - output frequency)}}{\text{Maximum output frequency}}$$

Deceleration time calculation formula

$$\text{Time it takes to reach set frequency} = \frac{\text{Deceleration time x (output frequency - set frequency)}}{\text{Maximum output frequency}}$$

Maximum output frequency: Parameter 01-00=18, maximum output frequency set by 01-02, 01-00 ≠ 18, maximum output frequency determined by V/F curve selected (50.0 / 60.0 / 90.0 / 120.0 / 180.0).

Example: 01-00=01 (50Hz (maximum output frequency), 05-02=10 Hz (multi-step speed 0), 05-17=5.0s (Acceleration time), 05-18=20.0 sec. (Deceleration time).

Acceleration time calculation formula

$$\text{Time it takes to reach set frequency} = \frac{5.0 \times 10\ \text{Hz}}{50\ \text{Hz}} = 1.0\ \text{sec.}$$

Deceleration time calculation formula

$$\text{Time it takes to reach set frequency} = \frac{20.0 \times 10\ \text{Hz}}{50\ \text{Hz}} = 4.0\ \text{sec.}$$

Example: Acceleration / deceleration timing when 05-00 is set to 1. In this example the following parameters are set:

00-02=【1】(External Terminal Operation**)**
00-04=【1】(Operation Mode: Run/Stop-Forward/Reverse).
03-00=【0】(Terminal S1: Run /Stop)
03-01=【1】(Terminal S2: Reversal /Stop)
03-02=【2】(Terminal S3: Preset Speed 1)
03-03=【3】(Terminal S4: Preset Speed 2)
03-03=【4】(Terminal S5: Preset Speed 3)

If the run command is cycled on and off, acceleration and deceleration time (a ~ f) is calculated based on the active speed command as follows:

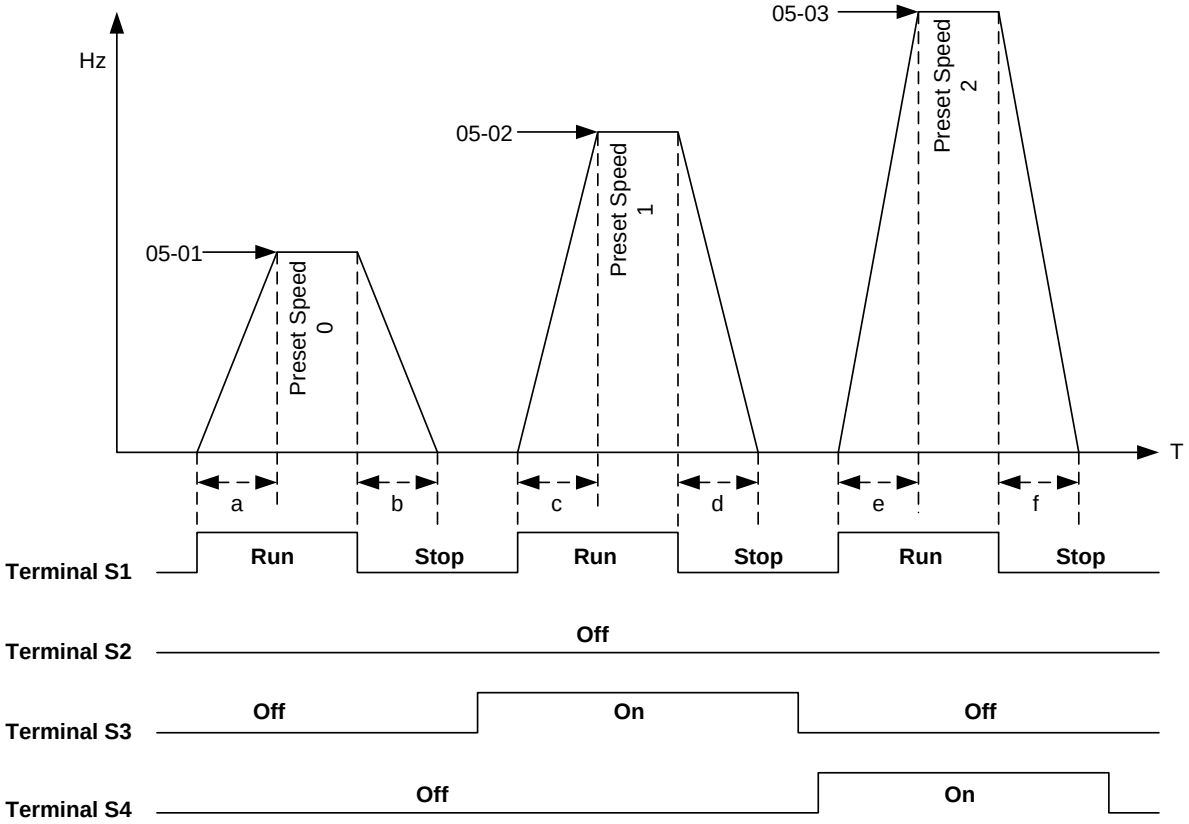

$$a = \frac{(05\text{-}17) \times (05\text{-}01)}{(01\text{-}02)} \qquad b = \frac{(05\text{-}18) \times (05\text{-}01)}{(01\text{-}02)} \qquad c = \frac{(05\text{-}19) \times (05\text{-}02)}{(01\text{-}02)} \quad \text{in sec.}$$

$$d = \frac{(05\text{-}20) \times (05\text{-}02)}{(01\text{-}02)} \qquad e = \frac{(05\text{-}21) \times (05\text{-}02)}{(01\text{-}02)} \qquad f = \frac{(05\text{-}22) \times (05\text{-}03)}{(01\text{-}02)} \quad \text{in sec.}$$

Acceleration / Deceleration Calculation Mode 2:

If the run command is remains on, acceleration and deceleration time (a ~ f) is calculated based on the active speed command as follows:

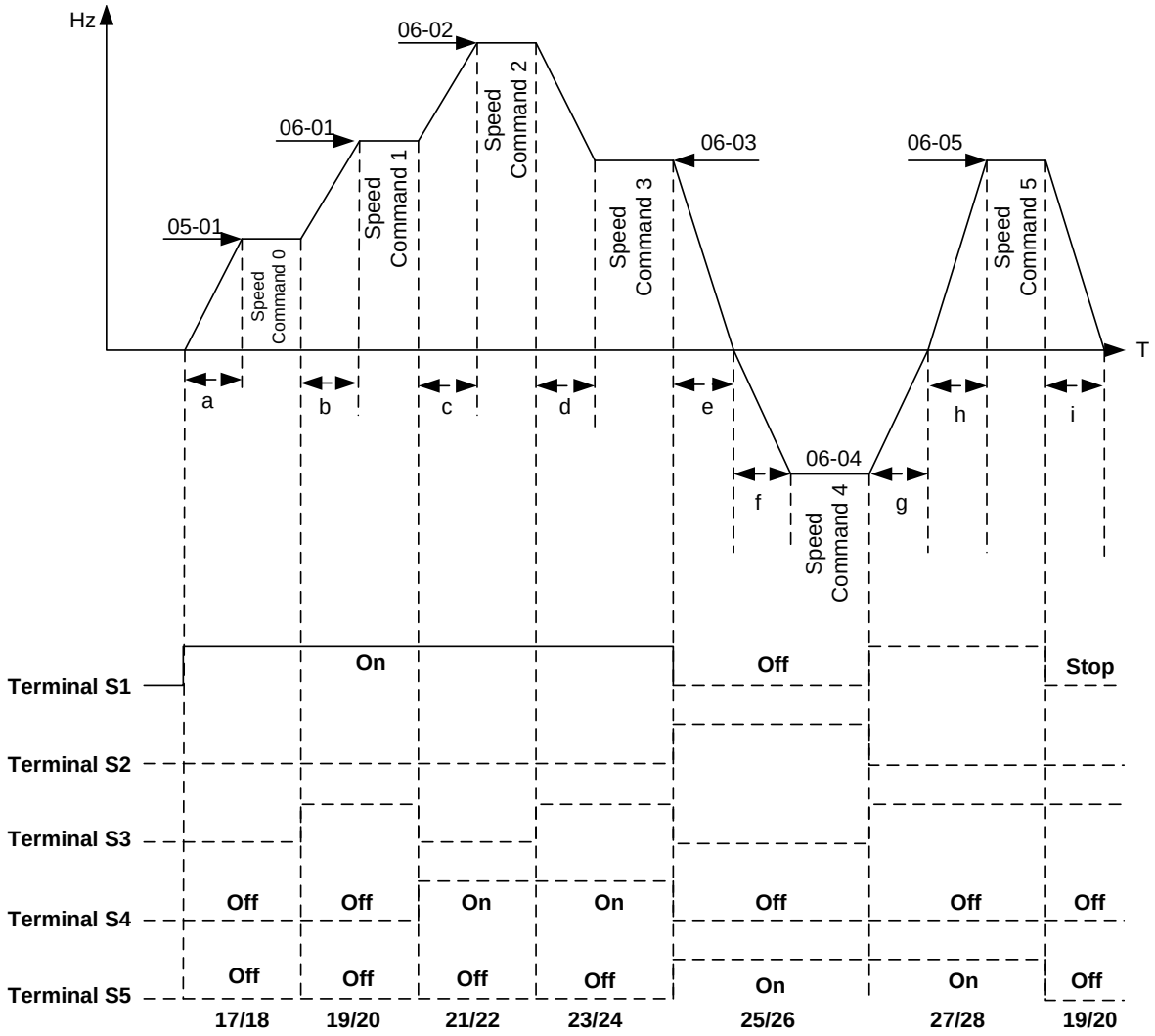

$$a = \frac{(05\text{-}17) \times (05\text{-}01)}{(01\text{-}02)} \quad b = \frac{(05\text{-}19) \times [(05\text{-}02)\text{-}(05\text{-}01)]}{(01\text{-}02)} \quad c = \frac{(05\text{-}21) \times [(05\text{-}02) - (06\text{-}01)]}{(01\text{-}02)} \text{ in sec.}$$

$$d = \frac{(05\text{-}24) \times [(05\text{-}01) - (05\text{-}02)]}{(01\text{-}02)} \quad e = \frac{(05\text{-}26) \times (05\text{-}02)}{(01\text{-}02)} \quad f = \frac{(05\text{-}25) \times (05\text{-}03)}{(01\text{-}02)} \text{ in sec.}$$

$$g = \frac{(05\text{-}27) \times (05\text{-}03)}{(01\text{-}02)} \quad h = \frac{(05\text{-}27) \times (05\text{-}04)}{(01\text{-}02)} \quad i = \frac{(05\text{-}19) \times (05\text{-}04)}{(01\text{-}02)} \text{ in sec.}$$

06-Auto Run(Auto Sequencer) Parameters

06-00	Auto Run(sequencer) mode selection
Range	【0: Disabled 【1, 4】: Execute a single cycle operation. Restart speed is based on the previous stopped speed. 【2, 5】: Execute continuous cycle operation. Restart speed is based on the previous cycle stop speed. 【3, 6】: After completion of a single cycle, the on-going operation speed is based on the speed of the last stage. Restart speed is based on the previous stopped speed 【1 to 3】: After a stop the inverter will start with the incomplete step when the run command is re-applied. 【4 to 6】: After a stop the inverter will start with the first step of the cycle when the run command is re-applied.

Frequency step 0 uses parameter 05-01 keypad Frequency.	
06-01	Auto _ Run Mode Frequency Command 1
06 02	Auto _ Run Mode Frequency Command 2
06-03	Auto _ Run Mode Frequency Command 3
06-04	Auto _ Run Mode Frequency Command 4
06 05	Auto _ Run Mode Frequency Command 5
06-06	Auto _ Run Mode Frequency Command 6
06-07	Auto _ Run Mode Frequency Command 7
06-08	Auto _ Run Mode Frequency Command 8
06-09	Auto _ Run Mode Frequency Command 9
06-10	Auto _ Run Mode Frequency Command 10
06-11	Auto _ Run Mode Frequency Command 11
06-12	Auto _ Run Mode Frequency Command 12
06-13	Auto _ Run Mode Frequency Command 13
06-14	Auto _ Run Mode Frequency Command 14
06-15	Auto _ Run Mode Frequency Command 15
Range	【0.00 ~ 650.00】Hz

06-16	Auto_ Run Mode Running Time Setting0
06-17	Auto_ Run Mode Running Time Setting1
06-18	Auto_ Run Mode Running Time Setting2
06-19	Auto_ Run Mode Running Time Setting3
06-20	Auto_ Run Mode Running Time Setting4
06-21	Auto_ Run Mode Running Time Setting5
06-22	Auto_ Run Mode Running Time Setting6
06-23	Auto_ Run Mode Running Time Setting7
06-24	Auto_ Run Mode Running Time Setting8
06-25	Auto_ Run Mode Running Time Setting9
06-26	Auto_ Run Mode Running Time Setting10
06-27	Auto_ Run Mode Running Time Setting11
06-28	Auto_ Run Mode Running Time Setting12
06-29	Auto_ Run Mode Running Time Setting13
06-30	Auto_ Run Mode Running Time Setting14
06-31	Auto_ Run Mode Running Time Setting15
Range	【0.00 ~ 3600.0】Sec

06-32	**Auto_ Run Mode Running Direction 0**
06-33	**Auto_ Run Mode Running Direction1**
06-34	**Auto_ Run Mode Running Direction2**
06-35	**Auto_ Run Mode Running Direction3**
06-36	**Auto_ Run Mode Running Direction4**
06-37	**Auto_ Run Mode Running Direction5**
06-38	**Auto_ Run Mode Running Direction6**
06-39	**Auto_ Run Mode Running Direction7**
06-40	**Auto_ Run Mode Running Direction8**
06-41	**Auto_ Run Mode Running Direction9**
06-42	**Auto_ Run Mode Running Direction10**
06-43	**Auto_ Run Mode Running Direction11**
06-44	**Auto_ Run Mode Running Direction12**
06-45	**Auto_ Run Mode Running Direction13**
06-46	**Auto_ Run Mode Running Direction14**
06-47	**Auto_ Run Mode Running Direction15**
Range	**【0】: STOP 【1】: Forward 【2】: Reverse**

- Enable Auto Run (sequencer) by setting any of the multi-function inputs S1-S6, parameter 03-00~03-05 to selection 18.
- Various Auto Run (sequencer) modes can be selects with parameter 06-00.
- 15 Auto Run (sequencer) modes can be selected by parameters (06-01~06-39)
- Auto Run frequency commands1 to 15 are set by parameters (06-01 ~ 06-07)
- Sequence run times are set by parameters (06-17 ~ 06-23)
- FWD/REV Direction for each sequence can be set with parameters (06-33 ~ 06-39)
- Auto sequence 0, frequency is set from keypad using parameter 05-01; sequence run time and direction are set by parameters 06-16 and 06-32
- Auto run mode uses acceleration parameters 00-14/00-15 and deceleration time parameters 00-16/00-17.

Note: The automatic operation mode is disabled when any of the following functions are enabled:

- PID function
- Parameters 06-16 to 06-31 are set to 0.

Example 1: Automatic operation mode – Single cycle

In this example the inverter executes a single cycle and then stops.

Parameter Settings:

06-00 =	1 or 4 (Single cycle operation)
06-32~06-34=	1 (Forward for multi-step speed 0 - 2)
06-35=	2 (Reversal for multi-step speed 3)
06-36~06-47=	0 (Stop for multi-step speed 4 - 15)
05-01=	15 Hz (Multi-step speed 0:15 Hz)
06-01=	30 Hz (Multi-step speed 1:30 Hz)
06-02=	50 Hz (Multi-step speed 2:50 Hz)
06-03=	20 Hz (Multi-step speed 0:20 Hz)
06-16=	20 sec (Multi-step speed 0:20 sec)
06-17=	25 sec (Multi-step speed 1:25 sec)
06-18=	30 sec (Multi-step speed 2:30 sec)
06-19=	40 sec (Multi-step speed 3:40 sec)

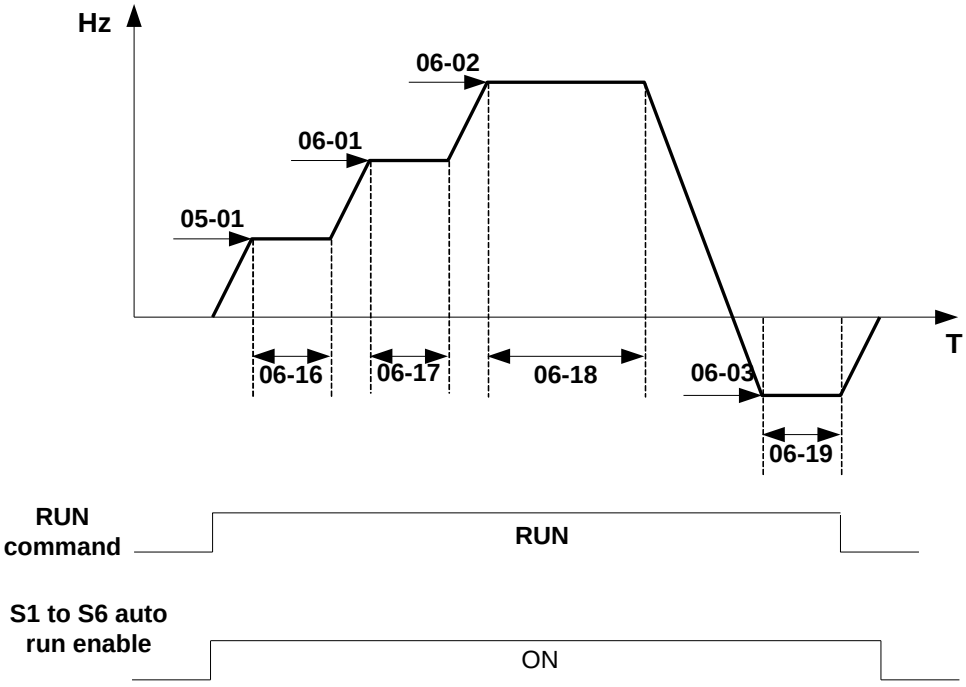

Figure 4.3.6 Single cycle automatic operation (stop)

Example 2: Automatic operation mode – Continuous cycle

In this example the inverter repeats the same cycle.

Parameter Settings:

06-00 = 2 or 5 (Continuous cycle operation)
06-01~06-47= Enter same setting as that of Example 1.

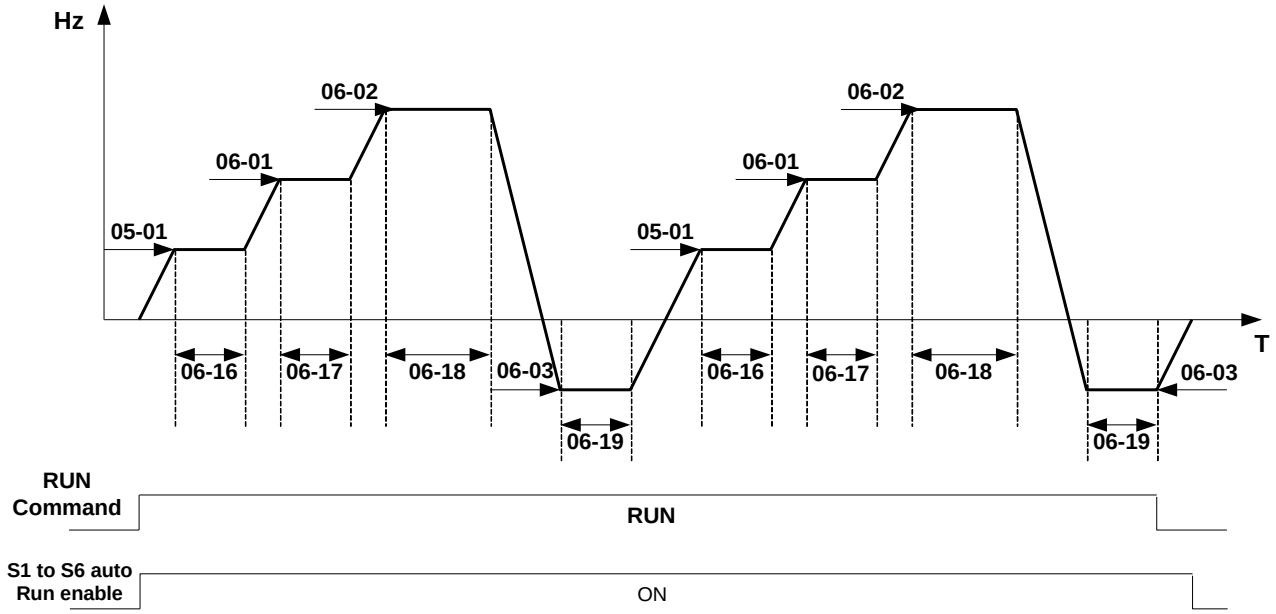

Example 3: Automatic operation mode – Single cycle and continue running at last speed of the cycle

In this example the inverter executes a single cycle and continue running at last speed of the cycle.

Parameter Settings:

06-00= 3 or 6 (Single cycle operation)
06-32~06-35= 1 (Forward)
06-36~06-47= 0
Other parameter = Enter same setting as that of Example 1.

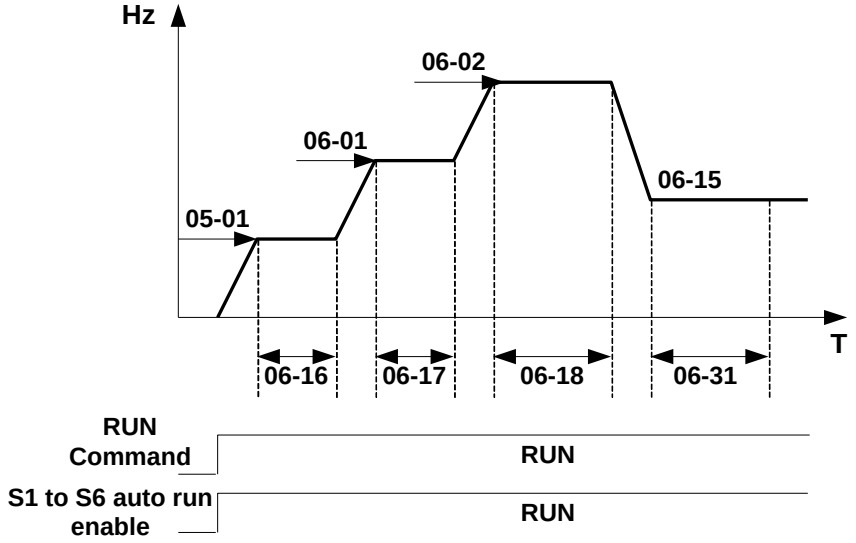

06-00= 1 to 3:
After a stop the inverter will start with the incomplete step when the run command is re-applied.

06-00= 4 to 6:
After a stop the inverter will start with the first step of the cycle when the run command is re-applied.

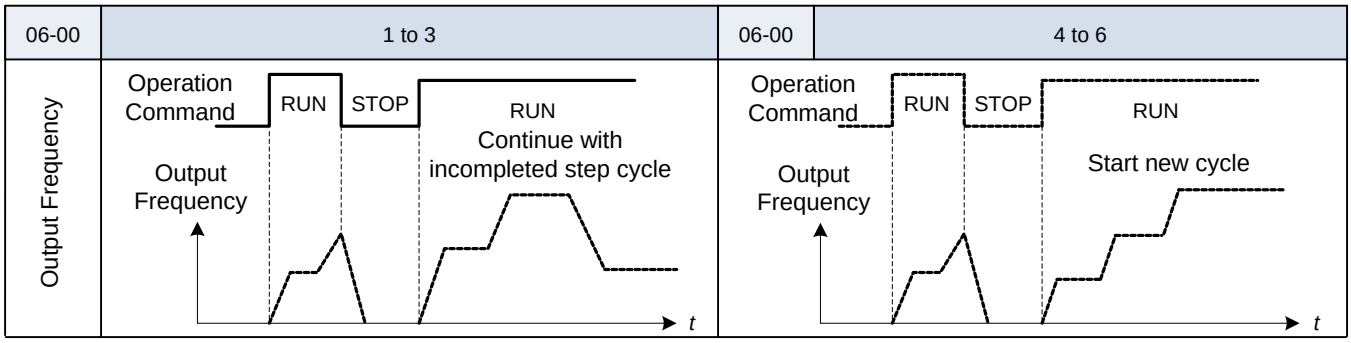

07-Start/Stop Command Setup

07-00	Momentary power loss and restart
Range	【0】:Momentary Power Loss and Restart Disable 【1】:Momentary Power Loss and Restart Enable

Inverter output will be turned off during a sudden drop in input voltage below the under voltage level.

07-00=0: Inverter trips on “UV” fault on power loss and will not restart.

07-00=1: Inverter resumes operation at half of the output frequency before power-loss after power has been restored. There is no limitation on the number of restarts.

The momentary power loss function is enabled as long as the inverter CPU still has power and the inverter will restart when power is restored based on the setting of parameters 00-02, 07-04 and status of External run command.

Caution: After a power loss and Run mode is set to External Run (00-02=1) and Direct start on power up is enabled (07-04=0) the inverter will automatically start when power is restored.

To ensure safety of operators and to avoid any damages to the machinery, all necessary safety measure must be taken and an inverter input disconnect switch must be used.

07-01	Auto Restart Delay Time
Range	【0.0~800.0】 s
07-02	Number of Auto Restart Attempts
Range	【0~10】

Automatic restart operation:

07-02=【0】, the inverter will not perform an automatic restart

07-02>【0】, 07-01=【0】
Fault is detected. The inverter turns off the output, displays the fault on the keypad and waits 0.5 sec. before accepting another run / automatic restart command.

07-02>【0】, 07-01>【0】
Active fault is reset and a speed search operation is performed. The time between each fault restart attempt is set by parameter 07-01.

When the total number of restart attempts has exceed the number of automatic restart attempts set in parameter 07-02, the inverter will turn off the output and the fault contact is activated.

When the automatic restart function is enabled the internal automatic restart attempt counter is reset based on the following actions:

1. No fault occurs in 10 minutes or longer after the automatic restart
2. Reset command to clear fault via input terminal or using the keypad
3. Power to the inverter is turned off and back on again

The automatic restart function can be used for the following faults. Please note that when the fault is not listed in the table the inverter will not attempt an automatic restart.

OC-S Over current at start
OV-C Over voltage during operation / deceleration
PF Input phase loss
OC Over current
OL1 Motor overload
OL2 Motor overload
OL3 Over Torque
LV Low voltage during operation
OVSP Over Speed
LIFE 1 Maintenance required input surge protection circuit
LIFE 2 Maintenance required control Circuit main capacitors
LIFE 3 Maintenance required DC-bus capacitors

Note: Auto restart after a fault will not function during DC injection braking or decelerating to stop.

07-03	Reset Mode Setting
Range	【0】:Enable Reset Only when Run Command is Off 【1】:Enable Reset when Run Command is On or Off

07-03=0 Cycle input run command after to reset and restart inverter.

07-04	Direct Running on Power Up
Range	【0】:Enable Direct Running on Power Up 【1】:Disable Direct Running on Power Up
07-05	Delay-ON Timer (Seconds)
Range	【1.0~300.0】 Sec

When direct run on power up is enabled (07-04=0) and the inverter is set to accept an external run command (00-02/00-03=1), the inverter will automatically start when power is applied and the run switch is ON.

It is recommend turning off the run switch when power to the inverter is turned off to avoid possibility of injury to operators and damage to machines when power is applied to the inverter.

Note: If this mode is required for the application all safety measures must be taken to ensure safe operation, including warning labels.

When direct run is disabled (07-04 =1) and the inverter is set to accept an external run command (00-02/00-03=1), the inverter will not start when power is applied. To start the inverter turn the run switch to OFF and back ON again.

07-06	DC Injection Brake Start Frequency (Hz)
Range	【0.10 ~ 10.00】Hz
07-07	DC Injection Brake Level (%) (Current Mode)
Range	【0.0~ 150.0】%
07-08	DC Injection Brake Time(Seconds)
Range	【0.0 ~ 25.5】Sec

DC Injection Brake Start Frequency parameter (07-06) is the level the output frequency has to reach before DC braking injection function is activated.

DC Injection Brake Level (07-07) as percentage of the inverter rated current. Increasing this level will increase the amount of heat generated by the motor windings. Do not set this parameter higher than the level necessary to hold the motor shaft.

DC Injection Brake Time (07-08) specifies the DC Injection braking time during a stop operation. DC injection braking at stop is disabled when parameter 07-08 is set to 0 sec.

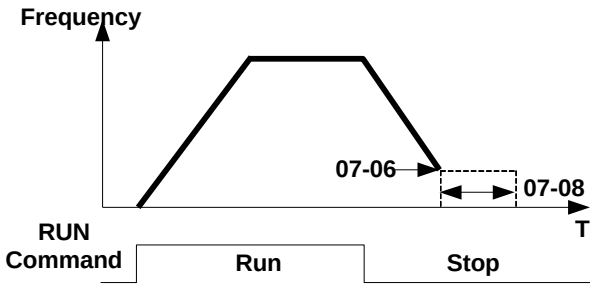

DC Injection Braking Operation

When DC Injection braking is active DC voltage is applied to the motor, increasing the braking current and resulting in an increase in the strength of the magnetic field trying to lock the motor shaft.

To enable DC injection braking during a start operation set the DC injection braking current (07-07) to a value greater than 0. DC injection braking at start can be used to prevent “wind milling effect” in fan applications.

To enable DC injection braking during a stop operation set the DC injection braking current (07-07) and the DC injection braking time at stop (07-08) to a value greater than 0.

Notes:
- Increasing the DC braking time (07-08, 07-16) can reduce the motor stop time.
- Increasing the DC braking current (07-07) can reduce the motor stop time.

07-09	Stopping Method
Range	【0】: Deceleration to stop 【1】: Coast to stop

When a stop command is issued the inverter stops according to the stop method selected. There are two types of stop modes,

07-09=0: Deceleration to stop

When a stop command is issued, the motor will decelerate to the minimum output frequency (01-08) Fmin and then stop. Deceleration rate depends on the deceleration time (factory default: 00-15).

When the output frequency reaches the DC braking stop frequency (07-06) or the minimum output frequency (01-08), DC injection braking is activated and the motor stops.

$$\text{Deceleration time} = \frac{\text{Output frequency when stop command is issued}}{\text{Maximum output frequency } F_{max} \text{ (01-02)}} \times \text{deceleration time setting}$$

Note: S curve setting will add to the overall stop time

07-09=1: Coast to stop

When a stop command is issued, the motor will coast to a stop. Stop time depends on motor load and friction of the system.

07-10	Starting Methods
Range	【0】: Normal Start 【1】: Speed Search

- 07-10=0: On starting, the inverter accelerates from 0 to target frequency in the set time.
- 07-10=1: On starting, the inverter accelerates to target frequency from the detected speed of motor.

07-11	Starting method for auto restart after fault
Range	【0】: Speed Search 【1】: Normal Start

- 07-11=0: During an auto-restart the inverter will perform a speed search by detecting motor speed and accelerate from there to the target speed.
- 07-11=1: During an auto-restart the inverter restarts from 0 Hz and accelerated to the set frequency,

07-12	Power loss ride through time
Range	【0.0 ~ 2.0】

- Power loss ride through allows continued operation after a momentary power failure as long as the power recovers within the time set in parameter 07-12, otherwise the Inverter will trip on a LVC fault due to power loss.
- When power has been restored the inverter will perform a speed search operation after which the inverter output frequency will accelerate back to the frequency of before the power failure.
- Power loss recovery time setting depends on the Inverter rating; the range will be from 1 to 2 sec.
- When 07-00 = 0: Power loss ride through is disabled.
- When 07-00 = 1: If the power loss time is set to a value less than 07-12, the drive will restart and perform a speed search after a 0.5 second delay. There no limit on the number of restarts.

Caution: If power loss time exceeds the value set in parameter 07-12, power loss ride through function is enabled (07-00=1) and Run command (00-02=1) is set to external control make sure the power and run switch are in off position.

07-13	Main Circuit Low Voltage Detection
Range	230V Class【150.0~210.0】 460V Class【300.0~420.0】

Adjust the 07-13 voltage level from 150 to 210 Vdc (230V series) or from 300 to 420 Vdc (460V series).

07-14	Kinetic Energy Back-up Deceleration Time (KEB）
Range	【0.0】: Disable 【0.1～25.0】: KEB Deceleration Time

- **07-14** = 0, KEB function disabled
- **07-14** ≠ 0, KEB function enabled

Example: 230V system

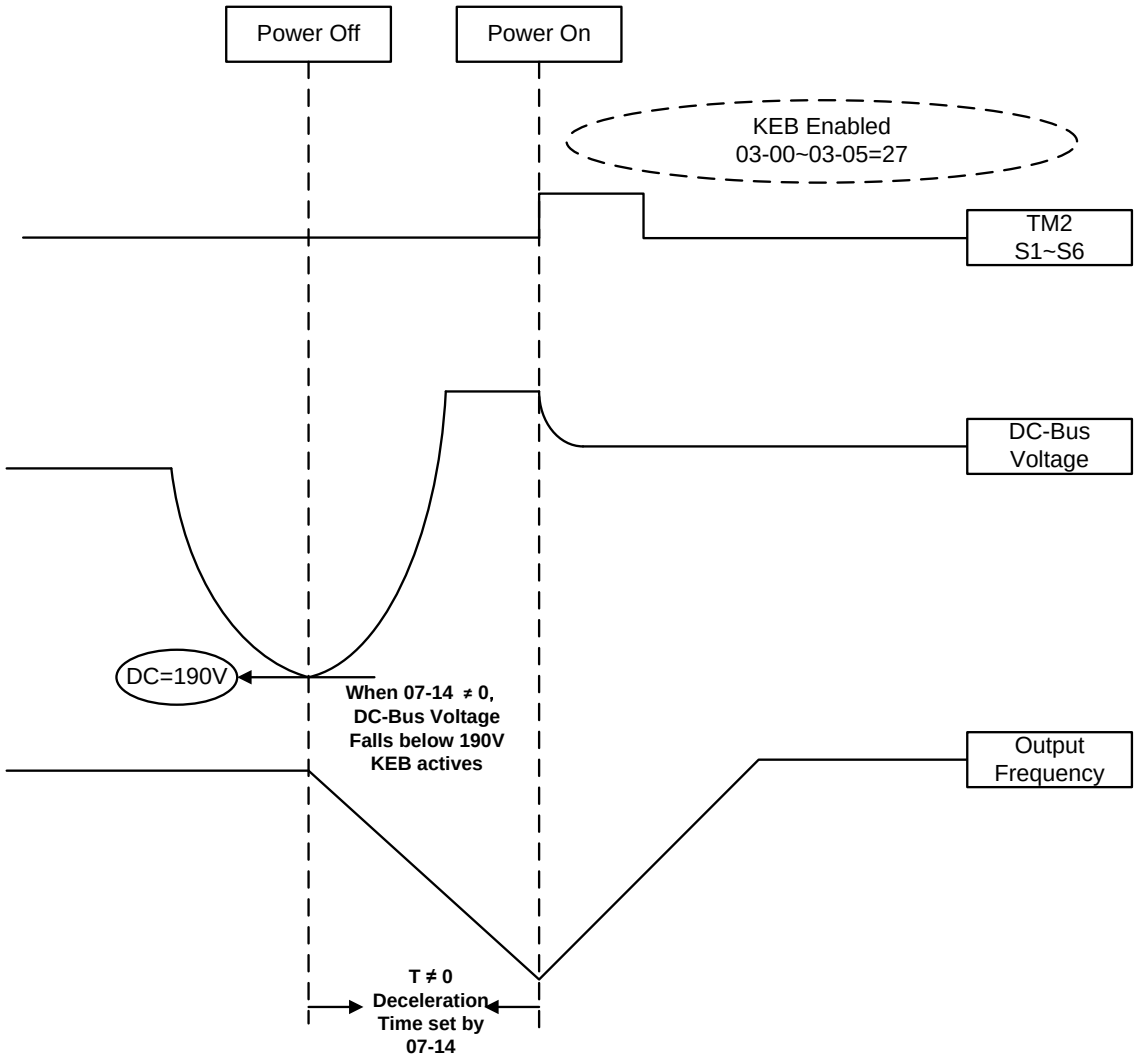

Notes:

- When 07-14≠0, Inverter will perform a KEB function when momentary power loss and auto-restart are disabled,
- When input power is turned off, CPU monitors the DC bus Voltage and when the DC bus voltage level falls below 190VDC (230V system) or 380VDC (460V system) KEB function is activated.
- When KEB function is enabled, the inverter decelerates to zero based on parameter 07-14 after which the inverter will stop.
- If power is restored while KEB is active the inverter accelerates back to its original frequency.

07-15	DC injection Brake Mode
Range	【0】Current Mode 【1】Voltage Mode
07-16	DC Injection Brake Level (Voltage Mode)
Range	【0.0~10.0】%

Note: Both DC Injection braking functions modes share two parameters DC braking frequency (07-06) and DC braking time (07-08).

Parameters:

07-15 is used to select DC braking mode (voltage mode or current mode)
When 07-15=0, DC Injection Brake Level is determined by 07-07;
When 07-15=1, DC Injection Brake Level is determined by 07-16.

Notes:
- 07-07 is based on inverter rated current.
- 07-16 maximum is 10% of V/f maximum output voltage.
- 07-16 is used to set the DC braking level in the voltage mode.

08-Protection function group

08-00	Trip Prevention Selection
Range	【xxxx0】:Enable Trip Prevention During Acceleration 【xxxx1】:Disable Trip Prevention During Acceleration 【xxx0x】:Enable Trip Prevention During Deceleration 【xxx1x】:Disable Trip Prevention During Deceleration 【xx0xx】:Enable Trip Prevention in Run Mode 【xx1xx】:Disable Trip Prevention in Run Mode 【x0xxx】:Enable over voltage Prevention in Run Mode 【x1xxx】:Disable over voltage Prevention in Run Mode

08-01	Trip Prevention Level During Acceleration
Range	【50 ~ 200】%

- Trip prevention adjustment level during acceleration to prevent over current (OC-A) trips.
- If trip prevention during acceleration is enabled and an over current condition occurs due to a heavy load, the acceleration is put on hold until the output current drops below the setting of parameter 08-01 after which acceleration resumes.

08-02	Trip Prevention Level During Deceleration
Range	【50 ~ 200】%

- Trip prevention adjustment level during deceleration to prevent over Voltage (OV-C) trips.
- If trip prevention during deceleration is enabled and an over voltage condition occurs during stopping due to the load (regenerative energy), deceleration is put on hold until the output current level falls below the setting of parameter 08-02 after which deceleration resumes.

08-03	Trip Prevention Level During Continuous Run Mode
Range	【50 ~ 200】%

- Trip prevention adjustment level during continuous Run to prevent over current (OC-C) trips.
- If trip prevention during continuous Run is enabled and an over current occurs due the load such as a sudden transient load, the output frequency is reduced by decelerating to a lower speed until the over current level falls below the setting of parameter 08-0301 after which acceleration resumes back to the target frequency.

08-04	Over Voltage Prevention Level During Run Mode
Range	【350.0VDC~390.0VDC】(230V class)　【700.0VDC~780.0VDC】(460V class)

- Over voltage prevention level can be set by parameter 08-04 if needed.
- When the DC bus voltage rises above level set in 08-04 an over voltage fault will occur.

08-05	Electronic Motor Overload Protection Operation Mode (OL1)
Range	【0】: Disable 【1】: Enable

The electronic motor overload protection function estimates the motor overload level based on the output current, output frequency, motor characteristics and time. The motor overload trip time depends on the motor rated current when the output current is greater than motor FLA.

On inverter power-up the motor overload protection internal thermal accumulation register is automatically reset.

To use the built-in motor overload protection function parameter 02-01 (motor rated current) has to match the motor rated current on the motor nameplate.

08-06	Operation After Overload Protection is Activated
Range	【0】:Coast-to-Stop After Overload Protection is Activated 【1】:Drive Will Not Trip when Overload Protection is Activated (OL1)

- 08-06 = 【0】: During an overload condition the inverter will coast to stop and display will flash OL1.To reset Press the 'Reset' key or use an external reset.
- 08-06 = 【1】: During an overload condition the inverter continues to run, display will flash OL1, until the current falls below the overload level.

08-07	OH Over Heat Protection
Range	【0】:Auto (Depends on heat sink temp.) 【1】:Operate while in RUN mode 【2】:Always Run 【3】:Disabled

- 08-07=【0】: Cooling fan operation depends on heat sink temperature.
- 08-07=【1】: Cooling fan runs when the inverter is running.
- 08-07=【2】: Cooling fan runs continuously.
- 08-07=【3】: Cooling fan operation is disabled.

08-08	AVR function
Range	【0】:AVR function enable 【1】:AVR function disable 【2】:AVR function disable for stop 【3】:AVR function disable for Deceleration 【4】:AVR function disabled for stop and Deceleration 【5】:when VDC>360/740V，AVR function is disabled for stop and Deceleration

Automatic voltage regulation stabilizes the motor voltage independent of fluctuation to the input voltage.

- **08-08=0:** Automatic voltage regulation is active.
- **08-08=1:** Automatic voltage regulation is not active, motor voltage follows the input voltage fluctuation.
- **08-08=2:** Automatic voltage regulation is active except during stopping to avoid increasing stop time.
- **08-08=3:** Automatic voltage regulation is active except during deceleration from one speed to another speed to avoid increased deceleration time.
- **08-08=4:** Automatic voltage regulation is active except during stopping and deceleration.
- **08-08=5:** Automatic voltage regulation is active except when VDC>360V (230V class) or VDC>740V (460V class during stopping to avoid increased stop time.

08-09	Input Phase Loss Protection
Range	【0】:Disabled 【1】:Enabled

08-09=0: Input phase loss detection is disabled.
08-09=1: Input phase loss detection is enabled. Keypad shows "PF", when an input phase loss is detected the inverter output is turned off and the fault contact is activated.

Note: The input phase loss detection is disabled when the output current is less than 30% of the inverter rated current.

08-10	Output phase lost protection
Range	【0】:Disabled 【1】:Enabled

08-10=0: Output phase loss detection is disabled.
08-10=1: Output phase loss detection is enabled. Keypad shows "LF" when an output phase loss is detected and the inverter output is turned off and the fault contact is activated.

Note: The output phase loss detection is disabled when the output current is less than 10% of the inverter rated current.

08-11	Motor type selection:
Range	【0】:Electronic relays protect standard motor 【1】: Electronic relays protect inverter duty motor
08-12	Motor Overload Protection Curve Selection:
Range	【0】:Constant Torque (OL =103 %) (150 % for 1 Minute) 【1】:Variable Torque (OL = 113 %)(123 % for 1 Minute)

When 08-11**=【0】:** Set 02-06 to the motor nominal frequency.

Motor overload protection levels based on setting of 08-11 and 08-12:

OL1 level / Frequency (base on rated F)	08-11=0 08-12=0	08-11=0 08-12=1	08-11=1 08-12=0	08-11=1 08-12=1
F<=33.3%	63%	63%	103%	113%
33.3%<F<90%	85%	88%		
F>=90%	103%	113%		

When 08-12**=【0】:** Overload protection for motors used in general purpose applications, motor load not to exceed 103% of the motor rated current for the motor to continue to run. If the load is greater than 150% of the motor rated current, the motor will run for 60 sec before tripping on a motor overload condition. (Curve 1).

When 08-12**=【1】:** Overload protection for motors used in variable torque applications (HVAC Fan, Pump …), motor load not to exceed 113% of the motor rated current for the motor to continue to run. If the load is greater than 123% of the motor rated current, the motor will run for 60 sec before tripping on a motor overload condition. (Curve 2).

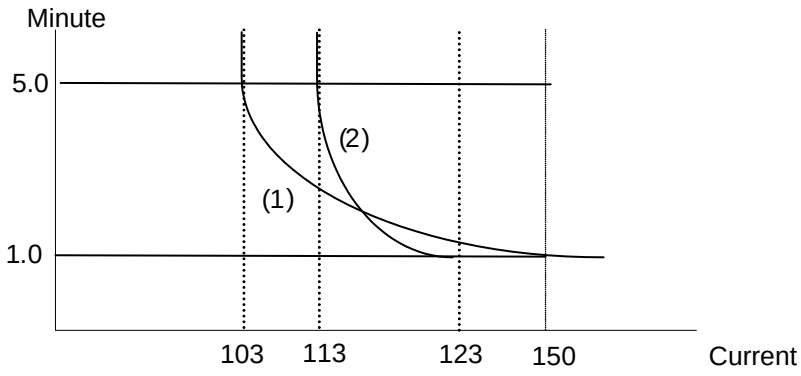

08-13	Over torque detection Control
Range	【0】: Over-torque detection is not valid 【1】: Over torque detection after set frequency is reached 【2】: Over torque detection after run command
08-14	Over torque protection action
Range	【0】: Stop output after over-torque detection (Free-run stop) 【1】: Continue to run after over-torque detection（Display only OL3）
08-15	Over Torque Detection Level
Range	【30 ~ 300】
08-16	Over Torque Detection Time
Range	【0.0~25.0】
08-17	Fire Mode
Range	【0】: Disable 【1】: Enable

The over torque detection function monitor the inverter output current or motor torque and can be used to detect increase in inverter current or motor torque (e.g. heavy load). The torque detection level (08-15) is based on the inverter rated output current (100% = inverter rated output current) when operating the inverter.

Over-torque detection

Parameter 08-13 selects over-torque detection function. An over-torque condition is detected when the output current / torque rises above the level set in parameter 08-15 (Over-torque detection level) for the time specified in parameter 08-16 (Over-torque detection time).

08-13=0: Over-torque detection is disabled.
08-13=1: Over-torque detection is enabled when the output frequency reaches the set frequency.
08-13=2: Over-torque detection is enabled during running.

Parameter 08-14 selects the way the inverter acts when an over-torque condition is detected.

08-14=0: When an over-torque condition is detected the inverter displays and over-torque detection fault and the motor decelerates to a stop.
08-14=1: When an over-torque condition is detected the inverter displays an over-torque detection alarm (OL3) and continues to run.

Fire Mode

08-17=0: Fire Mode disabled
08-17=1: Fire Mode enabled

Warning: Use of this mode for any application must be considered carefully and all safety implications must be taken into account. When enabled and Fire Mode is activated (See multi-function digital inputs, **03-00~03-05=【28】,** all protection features of the inverter will be disabled and the unit will continue to operate until its possible destruction. All liabilities for the use of this function will remain user's responsibility.

08-18	Ground Fault Detection
Range	【0】: Disable 【1】: Enable

If the inverter leakage current is greater than 50% of inverter rated current and the ground fault function is enabled (08-18=1), the keypad will display a "GF", motor will coast to a stop and fault contact is activated.
Note: this function is only available for inverter Frames 3, 4.

09-Communication Parameters

09-00	Assigned Communication Station Number
Range	【1 ~ 32】

Parameter 09-00 to sets the communication station number. Up to 32 units can be controlled from one master controller such as a PLC.

09-01	RTU code /ASCII code Selection
Range	【0】:RTU 【1】:ASCII
09-02	Baud Rate Setting (bps)
Range	【0】:4800 【1】:9600 【2】:19200 【3】:38400
09-03	Stop Bit Selection
Range	【0】:1 stop bit 【1】:2 stop bits
09-04	Parity Selection
Range	【0】:No Parity 【1】:Even Parity 【2】:Odd Parity
09-05	Data Format Selection
Range	【0】:8 bit data 【1】:7 bit data
09-06	Communication time-out detection time
Range	【0.0~25.5】s
09-07	Communication time-out operation selection
Range	【0】:Stop in deceleration time 1 and show COT after communication timeout 【1】:Stop in free run mode and show COT after communication timeout 【2】:Stop in deceleration time 2 and show COT after communication timeout 【3】:Keep running and show COT after communication timeout
09-08	Comm. fault tolerance count.
Range	【1~20】
09-09	Wait time of inverter transmission
Range	【5~65】ms

The Modbus communication port RJ45 (S+, S-) can be used to monitor, control, program and trouble-shoot the inverter. Modbus communication can perform the following operations, independent of the frequency command selection (00-05) setting and Operation command selection (00-02) setting:

- Monitor inverter signals
- Read and write parameters.
- Reset fault
- Control multi-function inputs

Note: Modbus RTU 8 bits data only (09-05).

Modbus (RS-485) communication specification:

Items	Specification
Interface	RS-485
Communication type	Asynchronous (start - stop synchronization)
Communication parameters	Baud rate: 4800, 9600, 19200 and 38400 bps Data Length: 7 or 8 bits Parity: options of none, even and odd bit. For even and odd selection stop bit is fixed at 1 bit.
Communication protocol	Modbus RTU / ASCII
Number of inverters	Maximum 32 units

Communication wiring and setup

(1) Turn off power to the inverter.
(2) Connect communication lines of the controller to the inverter (RJ45).
(3) Turn power on.
(4) Set the required communication parameters (09-00) via the keypad.
(5) Turn off power to the inverter and wait until keypad is completely off.
(6) Turn power on
(7) Start communication between controller and inverter.

Modbus (485) communication architecture

(1) Modbus communication configuration uses a master controller (PC, PLC), communicating to a maximum of 312 inverters.
(2) The master controller is directly connected to the inverter via the RS-485 interface. If the master controller has a RS-232, a converter must be installed to convert signals to RS-485 to connect the master controller to the inverter.
(3) A maximum 32 inverters can be connected to a network, following the Modbus communication standard.

Communication Parameters:

09-00: Inverter station addresses: Range 1-32

09-02: RS-485 communication baud rate setting
= 0: 4800 bps
= 1: 9600 bps
= 2: 19200 bps
= 3: 38400 bps

09-03: Stop bit selection
= 0: 1 stop bit
= 1: 2 stop bits

09-04: Parity selection of RS-485 communication
= 0: No parity.
= 1: even parity.
= 2: odd parity.

09-06: RS-485 communication error detection time

09-07: Stop selection of RS-485 communication failure

= 0: Deceleration to stop by deceleration time 00-15, display shows “COT” fault code.

= 1: Coast to stop

= 2: Deceleration to stop using the deceleration time 2

= 3: Continue to operate (only shows a warning message “COT”, press the stop button to stop operation)

09-08: Comm. fault tolerance count

When the number of communication errors exceeds the value set in parameter 09-08 the inverter will display the comm. Fault alarm “ERR6”.

09-09: Wait time of inverter transmission (09-09).

Sets the inverter response delay time. This is the time between the controller message and the start of the inverter response message. Refer to figure 4.4.76. Set the controller receive time-out to a greater value than the wait time parameter (09-09).

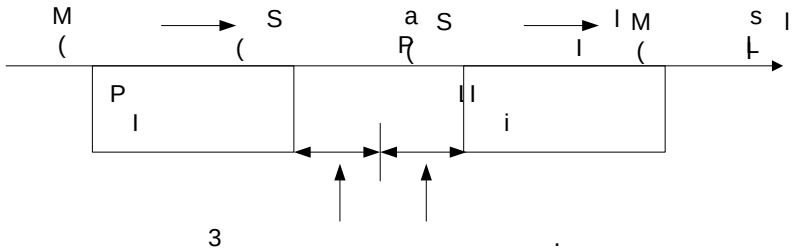

Figure 4.3.6 Communication Message Timing

10-PID function Setup

PID block diagram

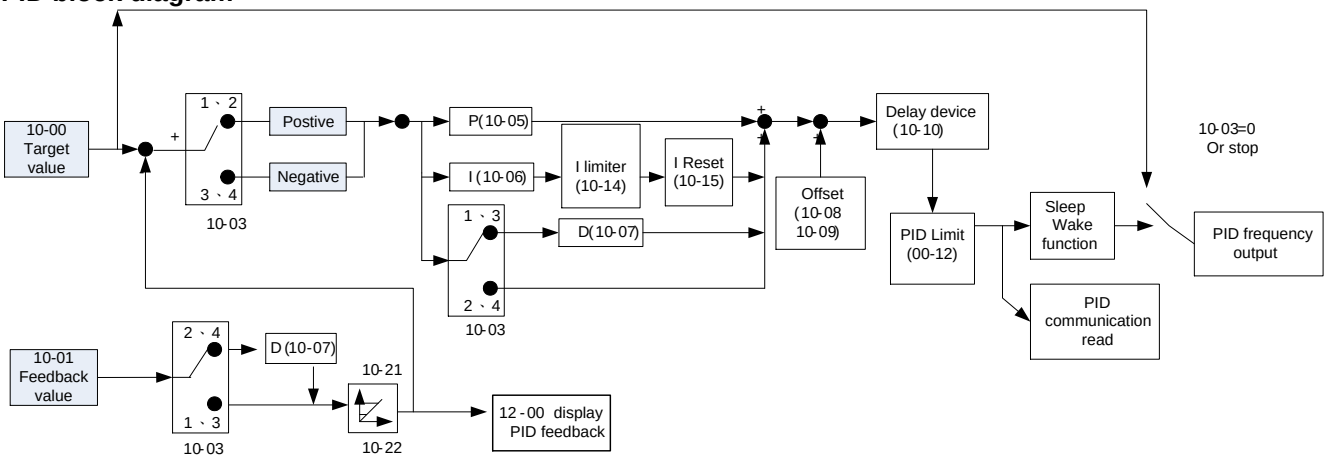

10-00	PID target value selection
Range	【0】:Potentiometer on Keypad 【1】:External AI1 Analog Signal Input 【2】:External AI2 Analog Signal Input 【3】:Target Frequency set by Communication method. 【4】:Set from keypad by parameter 10-02.

Parameter 10-00 sets the PID target selection when frequency source selection is set to PID parameters 00 - 05 / 00 - 06= 6.

10-01	PID feedback value selection
Range	【0】:Potentiometer on Keypad 【1】:External AI1 Analog Signal Input 【2】:External AI2 Analog Signal Input 【3】:Communication setting Frequency

Parameter 10-01 sets the PID feedback selection when frequency source selection is set to PID parameters 00 - 05 / 00 - 06= 6.

Note: 10-00 and 10-01 cannot be set to the same value.

10-02	PID Keypad Input
Range	【0.0~100.0】%

Parameter 10-02 sets the PID target from the keypad when 10-00=4 and frequency source selection is set to PID parameters 00 - 05 / 00 - 06= 6.

10-03	PID Mode Selection	
Range	【0】:PID Function disabled	
	【1】:FWD Characteristic.	Deviation is D-controlled
	【2】:FWD Characteristic.	Feedback is D-controlled
	【3】:REV Characteristic.	Deviation is D-controlled
	【4】:REV Characteristic.	Feedback is D-controlled

PID Mode Selection Type

The inverter offers two types of PID control:

(a) Basic PID control: (10-03 = 1, 3)

This is the basic type of PID control. Refer to the figure 4.3.7.

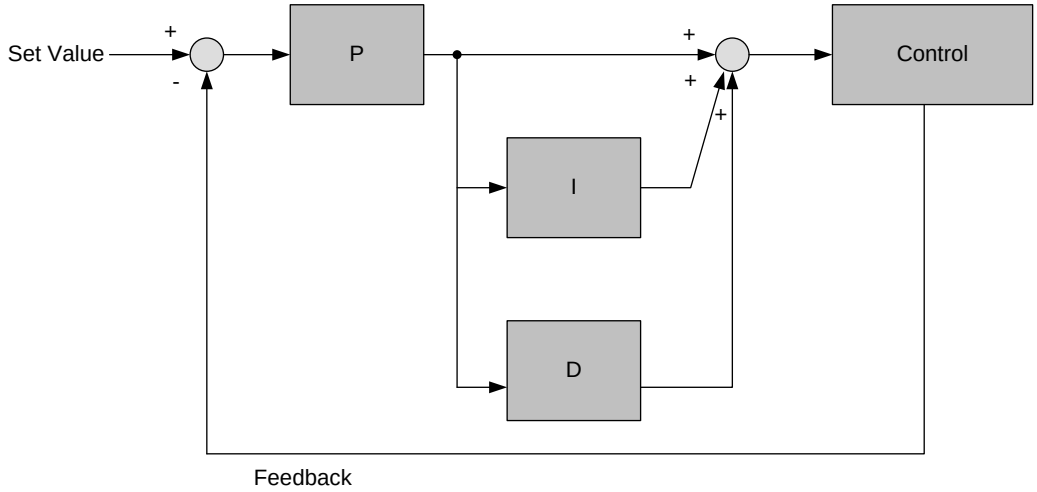

Figure 4.3.7 Basic PID control

Error signal (target minus feedback) is derivative controlled and set by parameter 10-07.

(b) PID control with differential feedback: (10-03 = 2, 4)

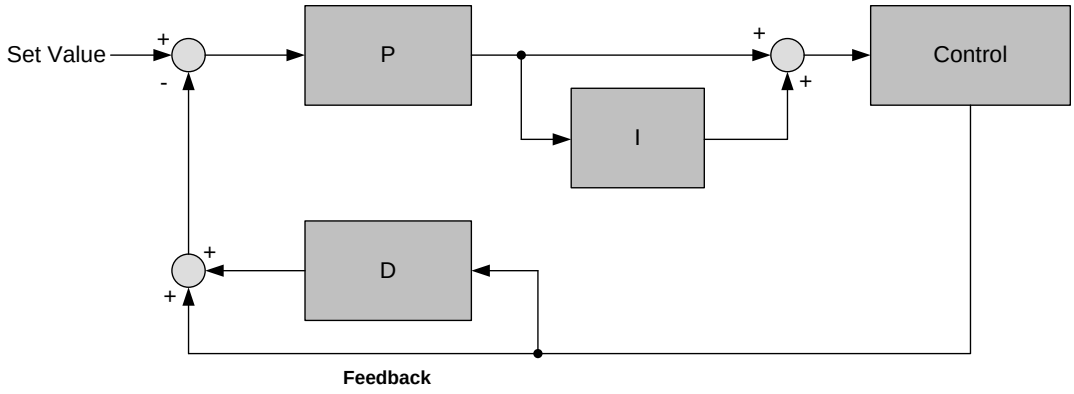

Figure 4.3.8 PID control for feedback differential value

Feedback (detected value) is derivative controlled and set by parameter 10-07.

Make sure to adjust the PID parameters without causing system instability. Refer to Figure 4.3.9 for PID control for feedback value differential.

For 10-03 = 1 or 2, if the error signal (target minus feedback) is positive, the output frequency increases and vice versa.
For 10-03 = 3 or 4, if the error signal (target minus feedback) is positive, the output frequency decreases and vice versa.

10-04	Feedback Gain Coefficient
Range	【0.0 ~ 10.00】

Parameter 10-04 sets the feedback calibration gain.

10-05	Proportional Gain
Range	【0.0 ~ 10.0】
10-06	Integral Time
Range	【0.0 ~ 100.0】Sec
10-07	Derivative Time
Range	【0.00 ~ 10.00】Sec

PID Adjustments

10-05 Proportional Gain control: The error signal (deviation) between the input command (set value) and the actual control value (feedback). This error signal or deviation is amplified by the proportional gain (P) to control the offset between the set value and the feedback value.

10-06 Integral control: The output of this control is the integral of the error signal (difference between set value and feedback value) and is used to minimize the offset signal that is left over from the gain control. When the integral time (I) is increased, the system response becomes slower.

10-07 Differential control: This control is the inverse from integral control and tries to guess the behavior of the error signal by multiplying the error with the differential time. The result is added to the PID input. Differential control slows down the PID controller response and may reduce system oscillation. **Note:** Most applications that PID control (fan and pump) do not require differential control.

Refer to Figure 4.4.77 for PID control operation

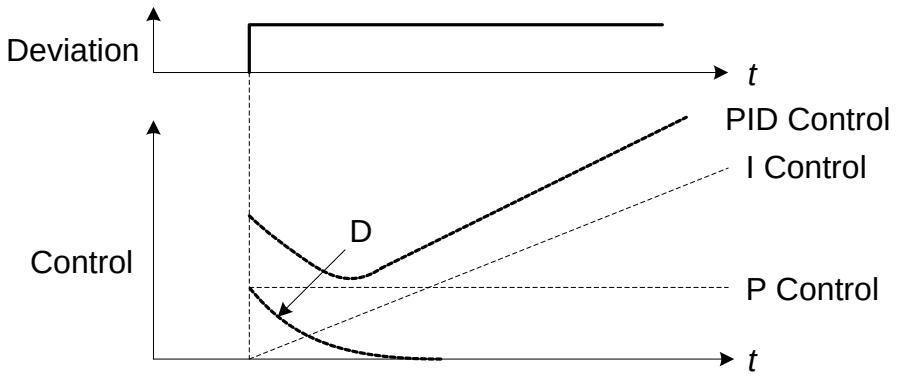

Figure 4.3.10 PID Control

PID Fine Tuning

All PID control parameters are related to each other and require to be adjusted to the appropriate values. Therefore, the procedure achieving the minimum steady-state is shown as following:

(1) Increase or decrease the proportion (P) gain until the system is stable using the smallest possible control change.

(2) The integral (I) reduces the system stability which is similar to increasing the gain. Adjust the integral time so that the highest possible proportional gain value can be used without affecting the system stability. An increase in the integral time reduces system response.

(3) Adjust the differential time if necessary to reduce overshoot on startup. The acceleration / deceleration time can also be used for the same purpose.

Fine-tuning PID control parameters:

(1) Reduce overshoot

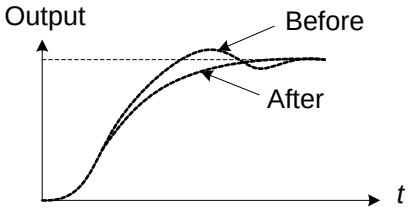

In case overshoot occurs, reduce the derivative time (D) and increase the integral time (I).

(2) Stabilize PID control

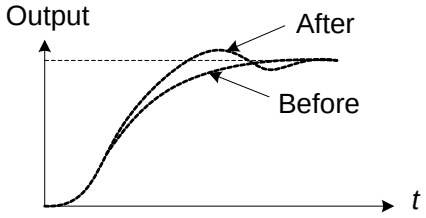

To quickly stabilize the PID control, reduce the integral time (I) and increase the differential time (D) in case overshoot occurs.

(3) Reduce long-period oscillation

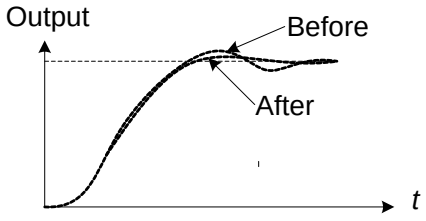

Adjust the integral time (I) in case of long-periodical system oscillation.

(4) Reduce short-period oscillation

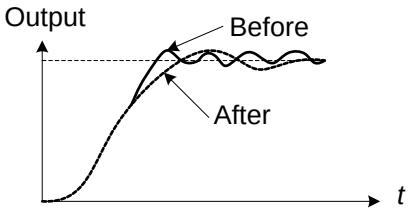

Adjusting the differential time (D) and proportional (P) gain when experiencing short-periodical oscillation.

10-08	PID Offset
Range	【0】: Positive Direction 【1】: Negative Direction
10-09	PID Offset
Range	【0 ~ 109】%

10-08 /10-09: Calculated PID output is offset by 10-09 (the polarity of offset is based on parameter 10-08)

10-10	PID Output Lag Filter Time
Range	【0.0 ~ 2.5】Sec

10-10: Low pass filter situated before the PID limit block that can be used to prevent PID output resonance. Increase the time constant to a value greater than the resonance frequency cycle and reduce time constant to increase the inverter response.

10-11	Feedback Loss Detection Mode
Range	【0】:Disable 【1】:Enable – Drive Continues to Operate After Feedback Loss 【2】:Enable – Drive "STOPS" After Feedback Loss
10-12	Feedback Loss Detection Level
Range	【0 ~ 100】
10-13	Feedback Loss Detection Delay Time
Range	【0.0 ~25.5】Sec

PID feedback loss detection

10-11=0: Disable

10-11=1: Warning
A feedback loss condition is detected when the PID feedback value falls below the value set in parameter 10-12 (PID feedback loss detection level) for the time set in parameter 10-13 (PID feedback loss detection time). PID feedback loss warning message "PDER" will be displayed on the keypad and the inverter will continue to operate.

10-11=2: Fault
A feedback loss condition is detected when the PID feedback value falls below the value set in parameter 10-12 (PID feedback loss detection level) for the time set in parameter 10-13 (PID feedback loss detection time). PID feedback loss fault message "PDER" will be displayed on the keypad, the inverter stops and the fault contact is activated.

10-14	Integration Limit Value
Range	【0 ~ 109】%

10-14: PID integral limit: Used to limit the integral output to prevent motor stall or damage to the system in case of a rapid change in the feedback signal. Reduce the value of 10-14 to increase the inverter response.

10-15	Integral Value Resets to Zero when Feedback Signal Equals the Target Value
Range	【0】: Disable 【1】: After 1 Sec 【30】: After 30 Sec (Range:- 1 ~ 30Sec)

10-15=0: Integral accumulator reset function is disabled.
10-15=1~30: When PID feedback value reaches the set point, the integral accumulator is reset after 1~30 seconds upon an inverter stop condition. The inverter will start running again based on the target and feedback value.

10-16	Allowable Integration Error Margin (Unit) (1 Unit = 1/8192)
Range	【0 ~ 100】%

10-16 sets integrator tolerance level after being reset to 0.

10-17	PID Sleep Frequency Level
Range	【0.00~650.00】Hz
10-18	PID Sleep Function Delay Time
Range	【0.0 ~25.5】Sec
10-19	PID Wake-up Frequency Level
Range	【0.00 ~ 650.00】Hz
10-20	PID Wake-up Function Delay Time
Range	【0.0 ~ 25.5】Sec

The PID Sleep function is used to stop the inverter when the PID output falls below the PID sleep frequency level (10-17) for the time specified in the PID sleep delay time parameter (10-18).

The inverter wakes up from a sleep condition when the PID output (Reference frequency) rises above the PID wake-up frequency level (10-19) for the time specified in the PID wake-up delay time (10-20).

Set parameter 10-17 to a value greater than 0 to enable the PID sleep function.

Refer to figure 4.3.11 for PID sleep / wakeup operation.

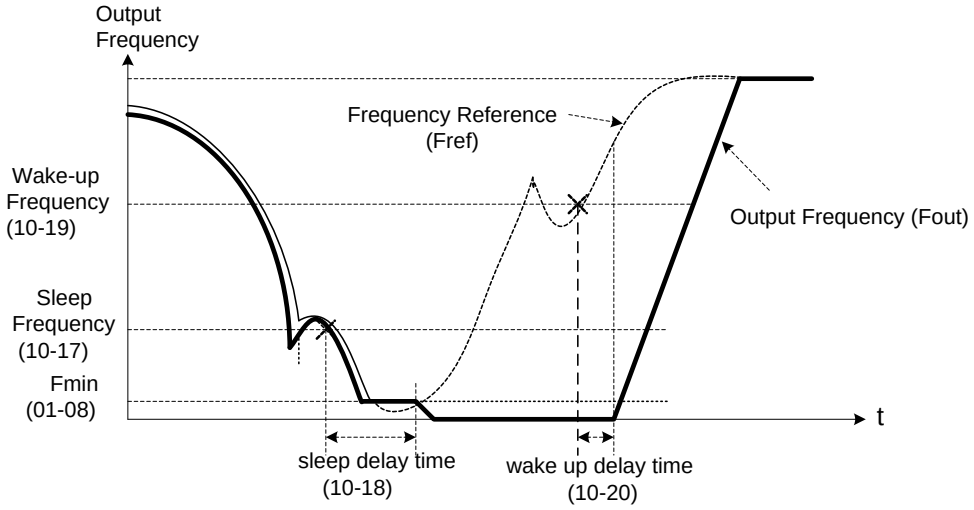

Figure 4.3.11: Timing diagram PID sleep / wake-up

10-21	Max PID Feedback Level.
Range	【0 ~ 999】
10-22	Min PID Feedback Level.
Range	【0 ~ 999】

PID Feedback Display Scaling

The PID feedback signal can be scaled to represent actual engineering units. Use parameter 10-21 to set the feedback signal gain for the feedback signal range maximum and parameter 10-22 to the feedback signal minimum.

Example:

Feedback signal is a pressure transducer (0-10V/0-20mA) with a range of 0 – 200 PSI
0V/0mA = 0 PSI, 10V/20mA = 200 PSI.

Set parameter 10-21 to 200 maximum of transducer range (100%).
Set parameter 10-22 to 0 minimum of transducer range (0%).

Refer to the figure 4.3.12 for displaying the unit conversion.

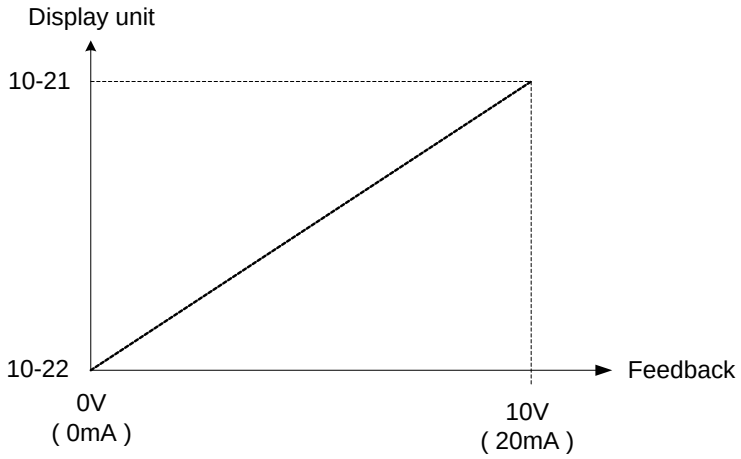

Figure 4.3.12 Feedback signal scaling

11 Performance Control Parameters

11-00	Prevention of Reverse operation
Range	【0】:Reverse command is enabled 【1】:Reverse command is disabled

If Prevention of Reverse operation parameter 11-01 is set to 1, the motor only operate in forward direction. A run command for reverse direction will run in forward direction. Forward or reverse commands can be issued via the control terminals, keypad or communication.

Note: This parameter can be used in fan and pump application where reverse rotation is prohibited.

11-01	Carrier Frequency
Range	【1~16】kHz

Sets the inverter carrier frequency in kHz (IGBT switching frequency).

Notes:
(1) Value 1 to 16 represents kHz.
(2) Refer to section 3 inverter derating based on carrier frequency.
(3) A low carrier frequency increases motor noise but reduces motor losses and temperature.
(4) A low carrier frequency decreases RFI, EMI interference and motor leakage current.

11-02	Carrier mode selection
Range	【0】:Carrier mode0 3-phase PW M modulation 【1】:Carrier mode1 2-phase PW M modulation 【2】:Carrier mode2 2-phase randomized PW M modulation

Sets the carrier frequency mode:
11-02 = 0: 3-phase PWM Modulation Three Output IGBTs are conducting at the same time (Full Duty).
11-02 = 1: 2-phase PWM Modulation Two output IGBTs are conducting at the same time (2/3 Duty).
11-02 = 2: Random PWM Modulation This modulation method will randomly use 3-phase PWM and 2-phase PWM modulation.

Modes	Name	IGBT Duty	Heat Losses	Torque Performance	Waveform Distortion	Motor Noise
0	3-Phase PWM	100%	High	High	Low	Low
1	2-Phase PWM	66.6%	Low	Low	High	High
2	Randomized PWM	Between mode 0 & mode1	Medium	Medium	Medium	Medium

11-03	Carrier Frequency Reduction by temperature rise
Range	【0】:Disable 【1】:Enable

When enabled inverter automatically lowers carrier frequency to 4 kHz when heat sink temperature reaches 80°C (176°F) and reverts back to the original carrier frequency setting when the temperature falls below 70°C (158°F) Heat sink temperature can be displayed by setting parameter 12-00=04000.

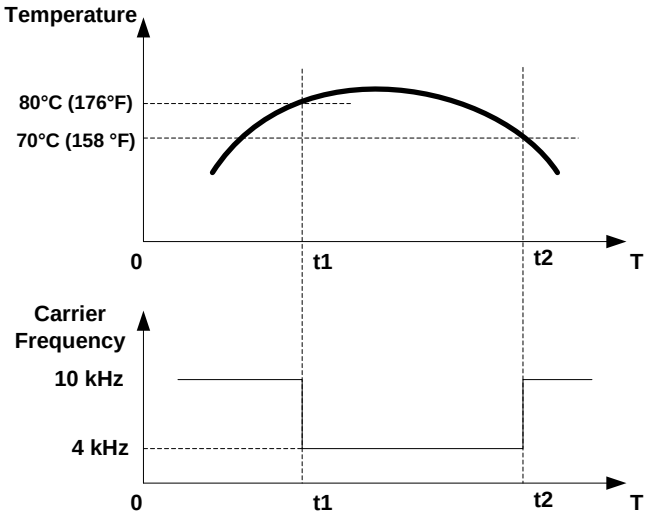

Figure 4.3.13 Carrier Frequency Reduction based on Temperature

11-04	S-Curve Acc 1
11-05	S-Curve Acc 2
11-06	S-Curve Dec 3
11-07	S-Curve Dec 4
Range	【0.0 ~ 4.0】Sec

The S curve function for acceleration / deceleration is used to reduce mechanical impact caused by the load during momentary starting and stopping of the inverter. To use the S curve function set the time for acceleration start point (11-04), acceleration end point (11-05), deceleration start point (11-06) and deceleration end point (11-07). Refer to figure 4.4.14 for more information

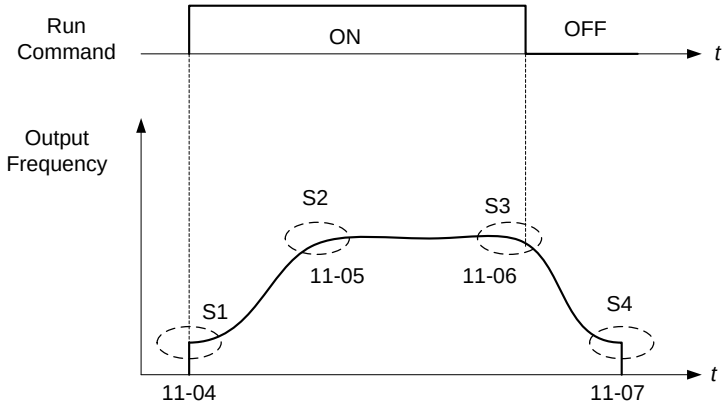

Figure 4.3.14 S curve characteristic

Notes:

- During stall prevention the actual acceleration and deceleration time is based on preset acceleration / deceleration time + S curve time.
- To disabled S curve function set parameter 11-04~11-07 to 0.

Accelerating time = Accelerating time 1 (or 2) + $\frac{(11\text{-}04) + (11\text{-}05)}{2}$

Deceleration time = Deceleration time 1 (or 2) + $\frac{(11\text{-}06) + (11\text{-}07)}{2}$

11-08	**Skip frequency 1**
11-09	**Skip frequency 2**
11-10	**Skip frequency 3**
Range	**【0.00 ~ 650.00】Hz**
11-11	**Skip frequency range (±frequency band)**
Range	**【0.00 ~ 30.00】Hz**

These parameters allow “skipping over” of certain frequencies that can cause unstable operation due to resonance within certain applications.

Note: Prohibit any operation within the skip frequency range. During acceleration and deceleration the frequency is continuous without skipping the jump frequency.

To enable skip frequency 1 – 3 (11-08 – 11-10) set the frequency to a value greater than 0.0 Hz.

Use the skip frequency range (11-11) to create a skip frequency bandwidth. Refer to figure 4.3.15.

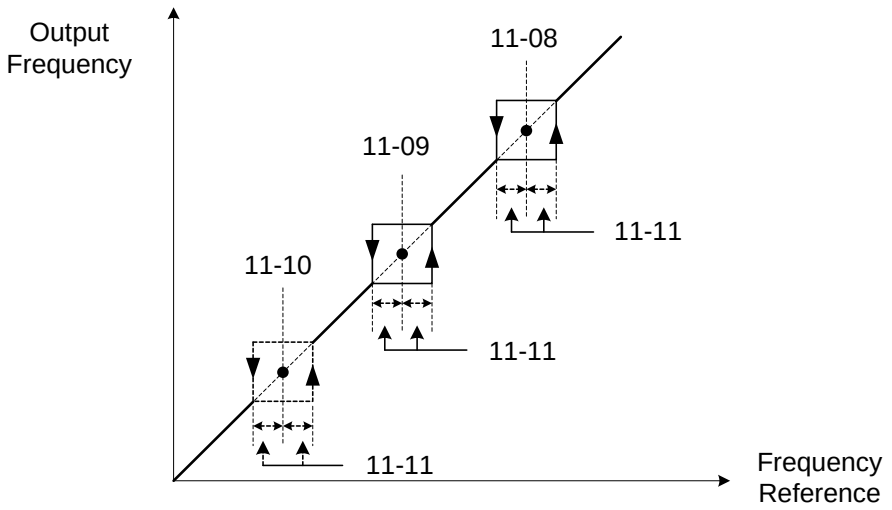

Figure 4.3.15 Jump frequency operation

11-12	V/F Energy Saving Gain (VF)
Range	【0 ~ 100】%

V/F energy savings reduces the output voltage for the purpose of saving energy.

To enable manual energy savings set one of the multi-function digital input (03-00 to 03-07) to 20 and activate the input.

When active the inverter output voltage is gradually decreased to match the required torque demand and as a result saves energy. Only for variable torque applications such as fans and pumps that require less torque when operation speed is reached. When input is turned off the output voltage gradually increases again back to the original output voltage.

11-13	Regeneration Prevention Function
Range	【0】: Regeneration prevention function is disabled 【1】: Regeneration prevention function is enabled 【2】: Regeneration prevention function is enabled only during constant speed

Regeneration prevention function monitors the DC-bus voltage and adjusts the speed reference, acceleration and deceleration rate, to prevent the inverter from tripping on an overvoltage.

When the speed reference is reduced, the motor will start to decelerate. When the inverter is operating at a fixed output frequency and excessive regenerative energy back to the inverter is detected the inverter will accelerate the motor in order to reduce the DC-bus voltage. Refer to figure 4.4.91.

To enable the regeneration prevention function set parameter 11-13 to a value greater than 0.

Example: Regeneration prevention during acceleration.

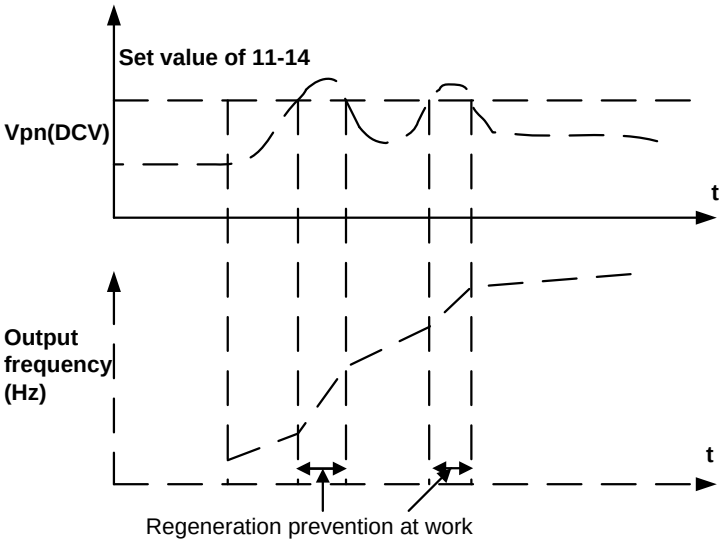

Example: Regeneration prevention during constant speed.

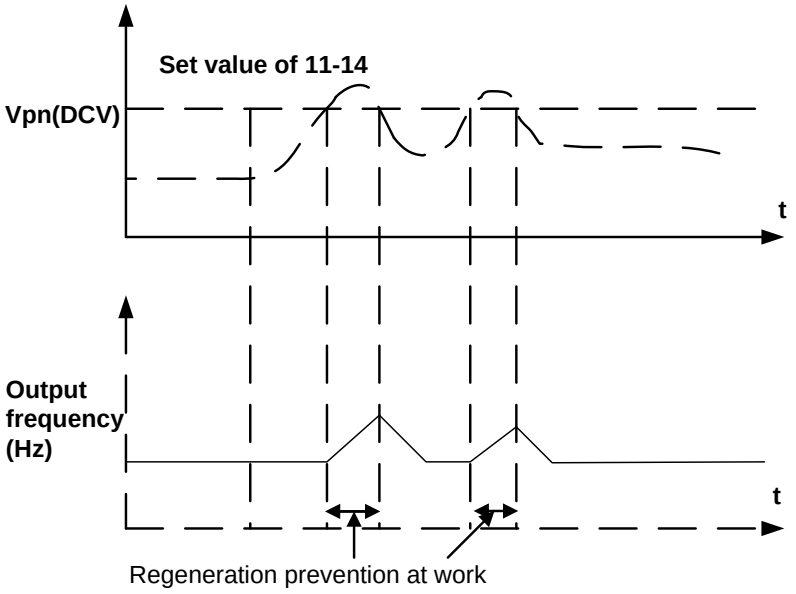

Example: Regeneration prevention during deceleration.

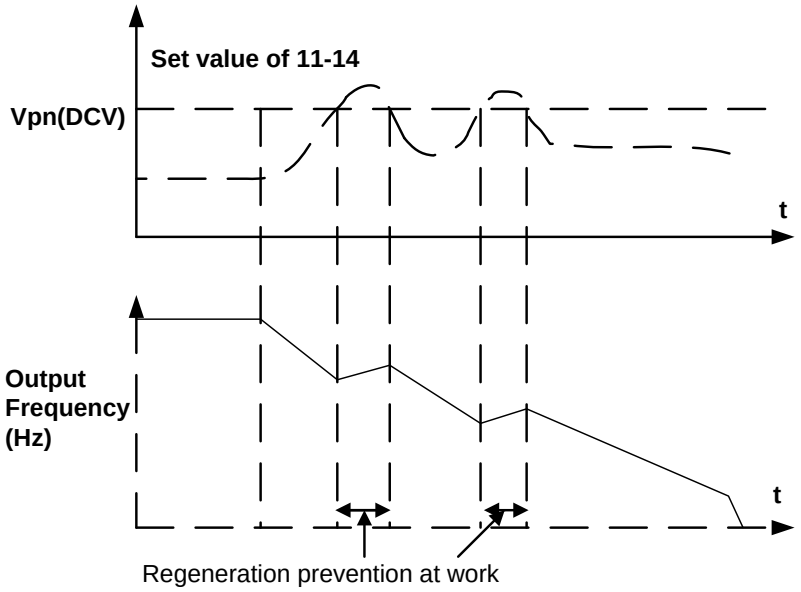

11-14	Regeneration Prevention Voltage Level
Range	【230V:300.0~400.0, 460V: 600.0~800.0】V

This parameter sets the Regeneration prevention voltage level.

Note: If this level is set too low over-voltage protection will not work properly and the actual deceleration time will be extended.

11-15	Regeneration Prevention Frequency Limit
Range	【0.00~ 15.00Hz】

Parameter sets the regeneration prevention frequency limit.

11-16	Regeneration Prevention Voltage Gain
Range	【0~200】

11-17	Regeneration Prevention Frequency Gain
Range	【0~200】

Regeneration prevention response time can be adjusted by increasing 11-16/11-17. This will improve the response to voltage changes on the DC bus but may cause output frequency instability.

Set 11-16 as low as possible to reduce output frequency instability if this does not correct the instability then reduce the setting of parameter 11-17.

12 Monitor Parameters

12-00	Display Mode
Range	0 0 0 0 0 MSD LSD 00000~88888 Each digit can be set from 0 to 8 as listed below. 【0】:Disable display(frequency& parameters) 【1】:output Current 【2】:output Voltage 【3】:DC voltage 【4】:Temperature 【5】:PID feedback 【6】:AI1 【7】:AI2 【8】:Count Status

Note: The highest bit is used for power-up monitor. The 4 least significant bits can be used to customize the display sequence see chapter 4.1.3.

12-01	PID Feedback Display format
Range	【0】:Displayed in Integer (xxx) 【1】:One Decimal Place (xx.x) 【2】:Two Decimal Places (x.xx)
12-02	**PID Feedback Display Unit Setting**
Range	【0】:xxx-- 【1】:xxxpb(pressure) 【2】:xxxfl(flow)

12-03	Custom Units (Line Speed) Display Mode
Range	【0~65535】Rpm

Set motor rated RPM for the inverter to display the actual motor speed based on the output frequency.
Motor synchronous speed = 120 x Rated frequency ÷ Number of poles.

12-04	Custom Units (Line Speed) Display Mode
Range	【0】:Drive Output Frequency is Displayed 【1】:Line Speed is Displayed in Integer (xxxxx) 【2】:Line Speed is Displayed with One Decimal Place (xxxx.x) 【3】:Line Speed is Displayed with Two Decimal Places (xxx.xx) 【4】:Line Speed is Displayed with Three Decimal Places (xx.xxx)

12-04≠0, line speed is displayed while the inverter is running or stopped.

12-05	Inputs and output Logic status display (S1 to S6) & RY1~2
Range	Read only(Panel read only)

Terminals S1-S6 are represented using two segments of each digit. Segment turns on when input is active. The bottom segments of each of the first three digits are used to represent the digital outputs (R1, R2, DO1). Segments turn on when output is active.

Example1: S1~S6 are ON

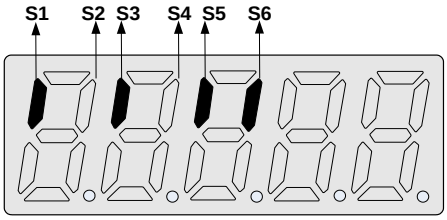

Example2: RY1, RY2 and PLC are ON

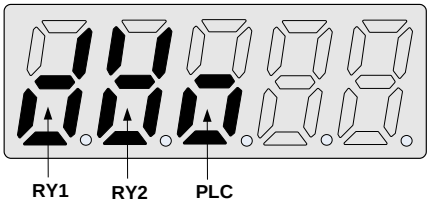

12-06	Alarm Selections for Inverter Components Life Expectancy
Range	**xxxx0:** life alarm of inrush current suppression circuit is invalid **xxxx1:** life alarm of inrush current suppression circuit is valid
	xxx0x: life alarm of control circuit capacitors is invalid **xxx1x:** life alarm of control circuit capacitors is valid
	xx0xx: life alarm of main circuit capacitors is invalid **xx1xx:** life alarm of main circuit capacitors is valid

Sets maintenance monitor for current suppression circuit, control and main circuit capacitors. Inverter will display LIFE1, LIFE2 or LIFE3 respectively indicating inverter maintenance required.

Set parameter 12-06 to 00111 to enable monitoring of current suppression circuit, control and main circuit capacitors.

12-08	Display of inrush current suppression circuit
Range	0~100

For every 1000 power cycles, maintenance percentage value for the current suppression circuit is reduced by 1% (Default 100%). Inverter displays ":Life1" when value falls below 30%.

12-09	Display of control circuit capacitors
Range	0~100

For every 80 hours of operation, maintenance percentage value of the control circuit capacitors is reduced by 1% (Default 100%). Inverter displays ":Life2" when value falls below 5%.

Note: Maintenance monitors for current suppression circuit, control and main circuit capacitors are based on estimates and therefor are only to be used as a reference.

12-11	Output current when Fault appeared
Range	----
12-12	Output voltage when fault appeared
Range	----
12-13	Output frequency when fault appeared
Range	----
12-14	DC bus voltage when fault appeared
Range	----
12-15	Frequency command when fault appeared
Range	----

13 Inspection & Maintenance Parameters

13-00	Drive Horsepower Code
Range	----

Inverter Model：	13-00 show	Inverter Model：	13-00 show
E510-2P5-XXX	2P5	E510-401-XXX	401
E510-201-XXX	201	E510-402-XXX	402
E510-202-XXX	202	E510-403-XXX	403
E510-203-XXX	203	E510-405-XXX	405
E510-205-XXX	205	E510-408-XXX	408
E510-208-XXX	208	E510-410-XXX	410
E510-210-XXX	210	E510-415-XXX	415
E510-215-XXX	215	E510-420-XXX	420
E510-220-XXX	220	E510-425-XXX	425

13-01	Software Version
Range	----

13-02	Fault Log Display（Latest 3 faults）
Range	----

Last three faults are stored using FIFO mechanism, whenever a new fault occurs the previous faults are pushed down. Example: Fault stored in 2.xxx is moved to 3.xxx and 1.xxx is moved to 2.xxx. The most recent fault will be stored on position 1.xxx.

Notes:

- Use Up▲and Down▼ keys to scroll between the fault registers.
- Pressing the reset key when parameter 13-02 is displayed will clear all three fault registers and the display for each register will change to 1. ---, 2. ---, 3. ---.
- Fault log content 1.OC-C'; means that most recent fault is OC-C, etc...

13-03	Accumulated Inverter Operation Time 1
Range	【0~23】Hours
13-04	Accumulated Inverter Operation Time 2
Range	【0~65535】Days
13-05	Accumulated Inverter Operation Time Mode
Range	【0】:Power on time 【1】:Operation time

13-05= 0: Inverter logs the time while the inverter is powered-up.
13-05= 1: Inverter logs the time when the inverter is running.

13-06	Parameter Lock
Range	【0】:Enable all Functions 【1】:Preset speeds 05-01~05-15 cannot be changed 【2】:All Functions cannot be changed Except 05-01~05-16 【3】:Disable All Function Except 13-06

13-07	Parameter Lock Key Code
Range	【00000~65535】

When the parameter lock key number is set any parameter modification will require entering the key number.

Example:

Set Parameter lock key number:

Step1:

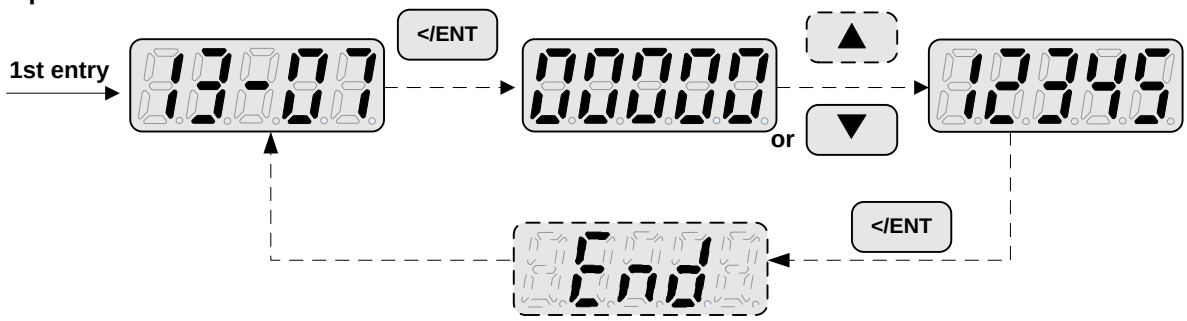

Step 2:

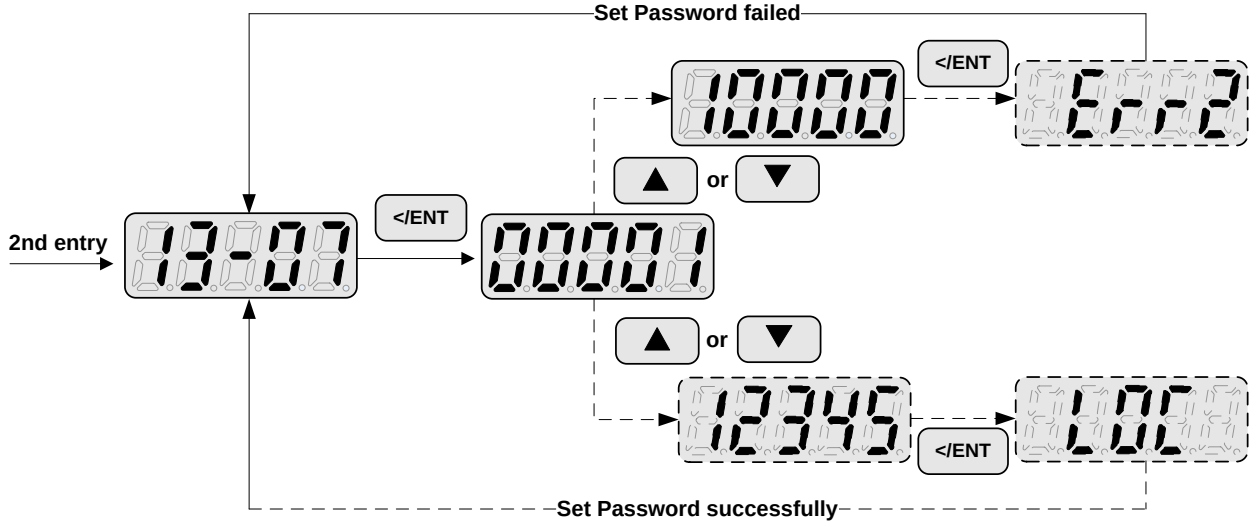

Key code (password) unlock

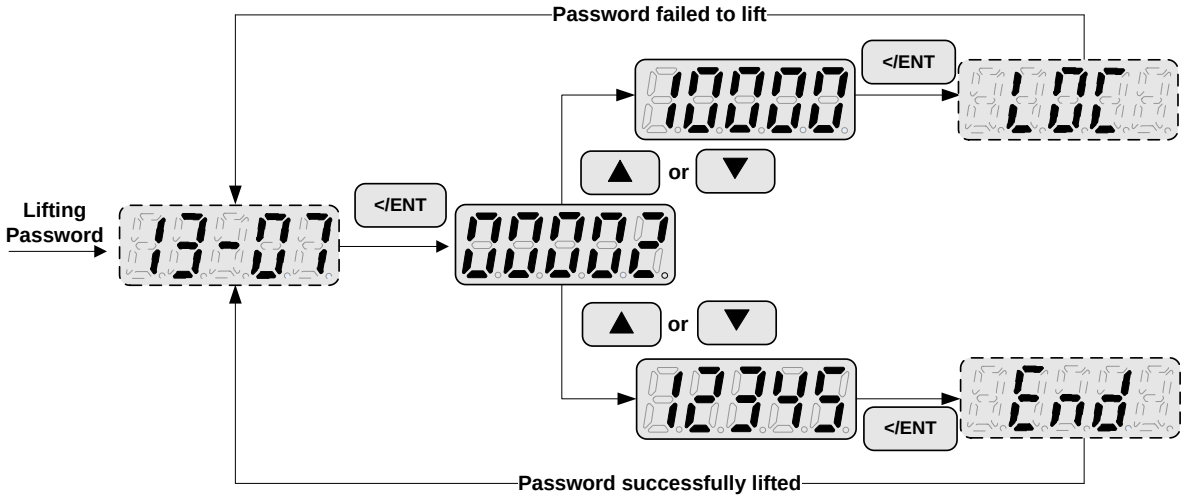

13-08	Reset Drive to Factory Settings
Range	【1150】: Reset to factory setting. 50Hz system 【1160】: Reset to factory setting. 60 Hz system. 【1112】: RESET PLC

Use parameter 13-08 to initialize the inverter to factory default. It is recommended to write down the modified parameters before initializing the inverter. After initialization, the value of 13-08 will return to zero automatically.

14 PLC Setting Parameters

14-00	**Setting value1 of T1**
14-01	**Setting value1 of T1 (mode 7)**
14-02	**Setting value1 of T2**
14-03	**Setting value1 of T2 (mode 7)**
14-04	**Setting value1 of T3**
14-05	**Setting value1 of T3 (mode 7)**
14-06	**Setting value1 of T4**
14-07	**Setting value1 of T4 (mode 7)**
14-08	**Setting value1 of T5**
14-09	**Setting value1 of T5 (mode 7)**
14-10	**Setting value1 of T6**
14-11	**Setting value1 of T6 (mode 7)**
14-12	**Setting value1 of T7**
14-13	**Setting value1 of T7 (mode 7)**
14-14	**Setting value1 of T8**
14-15	**Setting value1 of T8 (mode 7)**
Range	**【0~9999】**

T1~T8 represent 8 timers of the built-in PLC.

14-16	**Setting value1 of C1**
14-17	**Setting value1 of C2**
14-18	**Setting value1 of C3**
14-19	**Setting value1 of C4**
14-20	**Setting value1 of C5**
14-21	**Setting value1 of C6**
14-22	**Setting value1 of C7**
14-23	**Setting value1 of C8**
Range	**【0~65535】**

C1~C8 represent 8 counters of the built-in PLC.

14-24	**Setting value1 of AS1**
14-25	**Setting value2 of AS1**
14-26	**Setting value3 of AS1**
14-27	**Setting value1 of AS2**
14-28	**Setting value2 of AS2**
14-29	**Setting value3 of AS2**
14-30	**Setting value1 of AS3**
14-31	**Setting value2 of AS3**
14-32	**Setting value3 of AS3**
14-33	**Setting value1 of AS4**
14-34	**Setting value2 of AS4**
14-35	**Setting value3 of AS4**
Range	**【0~65535】**

AS1~AS4 represent 4 addition blocks of the built-in PLC.

14-36	**Setting value1 of MD1**
14-37	**Setting value2 of MD1**
14-38	**Setting value3 of MD1**
14-39	**Setting value1 of MD2**
14-40	**Setting value2 of MD2**
14-41	**Setting value3 of MD2**
14-42	**Setting value1 of MD3**
14-43	**Setting value2 of MD3**
14-44	**Setting value3 of MD3**
14-45	**Setting value1 of MD4**
14-46	**Setting value2 of MD4**
14-47	**Setting value3 of MD4**
Range	**【0~65535】**

MD1~MD4 represent 4 multiplication blocks of the built-in PLC.

15 PLC Monitoring Parameters

15-00	Current value of T1
15-01	Current value of T1(mode 7)
15-02	Current value of T2
15-03	Current value of T2(mode 7)
15-04	Current value of T3
15-05	Current value of T3(mode 7)
15-06	Current value of T4
15-07	Current value of T4(mode 7)
15-08	Current value of T5
15-09	Current value of T5(mode 7)
15-10	Current value of T6
15-11	Current value of T6(mode 7)
15-12	Current value of T7
15-13	Current value of T7(mode 7)
15-14	Current value of T8
15-15	Current value of T8(mode 7)
Range	【0~9999】

15-16	Current value of C1
15-17	Current value of C2
15-18	Current value of C3
15-19	Current value of C4
15-20	Current value of C5
15-21	Current value of C6
15-22	Current value of C7
15-23	Current value of C8
Range	【0~65535】

15-24	Current value of AS1
15-25	Current value of AS2
15-26	Current value of AS3
15-27	Current value of AS4
15-28	Current value of MD1
15-29	Current value of MD2
15-30	Current value of MD3
15-31	Current value of MD4
15-32	Current value of TD
Range	【0~65535】

Note: Parameter 15-32 Current value of TD displays the current PLC program execution time in μs.

5. Check motor rotation and direction

This test is to be performed solely from the inverter keypad. Apply power to the inverter after all the electrical connections have been made and protective covers have been re-attached. At this point, **DO NOT RUN THE MOTOR**, the keypad should display as shown below in Fig. 5.1 and the speed reference **5.00Hz** should be blinking at the parameter code “05-01”.

Important: Motor rotation and direction only applies to standard AC motors with a base frequency of 60Hz. For 50Hz or other frequency AC motors please set V/F pattern in group 01 before running the motor.

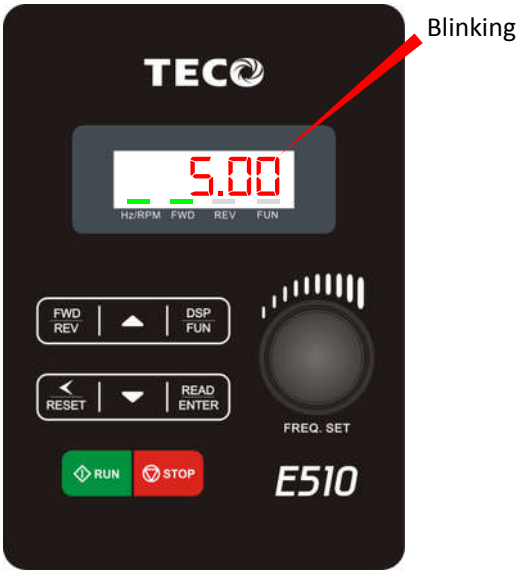

Fig 5.1: Keypad (Stopped)



Fig 5.2: Keypad (Running)

Next press the **RUN** key, see Fig 5.2. The motor should now be operating at low speed running in forward (clockwise) direction. Next press **STOP** key to stop the motor.

If the motor rotation is incorrect, power down the inverter.

After the power has been turned OFF, wait at least ten minutes until the charge indicator extinguishes completely before touching any wiring, circuit boards or components.

Using Safety precaution, and referring to section 3.9 exchange any two of the three output leads to the motor (U/T1, V/T2 and W/T3). After the wiring change, repeat this step and recheck motor direction.

6. Speed Reference Command Configuration

The inverter offers users several choices to set the speed reference source. The most commonly used methods are described in the next sections.

Frequency reference command is selected with parameter 00-05.

00-05: Main Frequency Command (Frequency Source)

This function sets the frequency command source.

Setting Range: 0 to 7

To set parameter 00-05:
- After power-up press the **DSP/FUN** key
- Select **00 Basic Fun**
- Press **READ/ ENTER** key
- Select parameter -05 with the **UP/DOWN** ▲ and ▼ keys and press the **READ/ ENTER** key.

In the parameter list move cursor to 00-05 with the **UP/DOWN** keys and press **READ/ ENTER** key to select.

00-05	Main Frequency Command Source Selection
Range	**【0】:Up/Down of Keypad** **【1】:Potentiometer on Keypad** **【2】:External AI1 Analog Signal Input** **【3】:External AI2 Analog Signal Input** **【4】:External Up/Down Frequency Control** **【5】:Communication Setting Frequency** **【6】:PID Output Frequency** **【7】:Pulse Input**

6.1 Reference from Keypad

Speed reference from the keypad is the default setting. Press the **READ/ ENTER** key first and use the </RESET, ▲ and ▼ keys to change the speed reference.



6.2 Reference from External Analog Signal (0-10V / 4-20mA)

Analog Reference: 0 – 10 V (Setting 00-05 = 2)

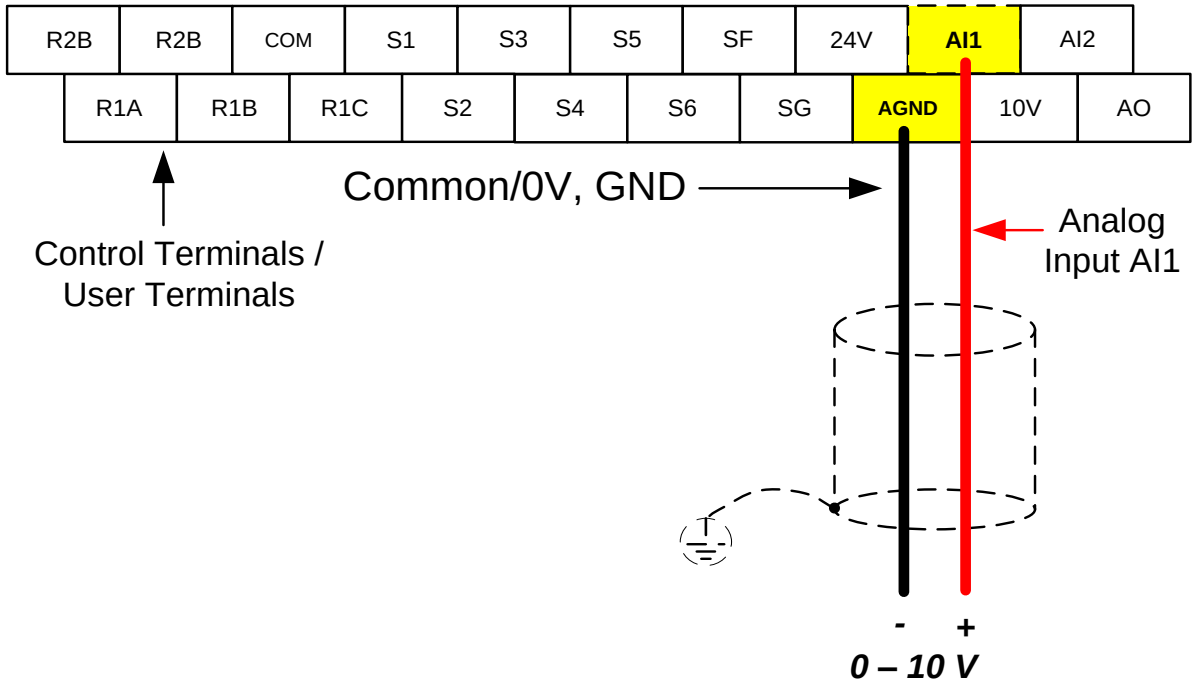

Analog Reference: Potentiometer / Speed Pot (Setting 00-05 = 2)

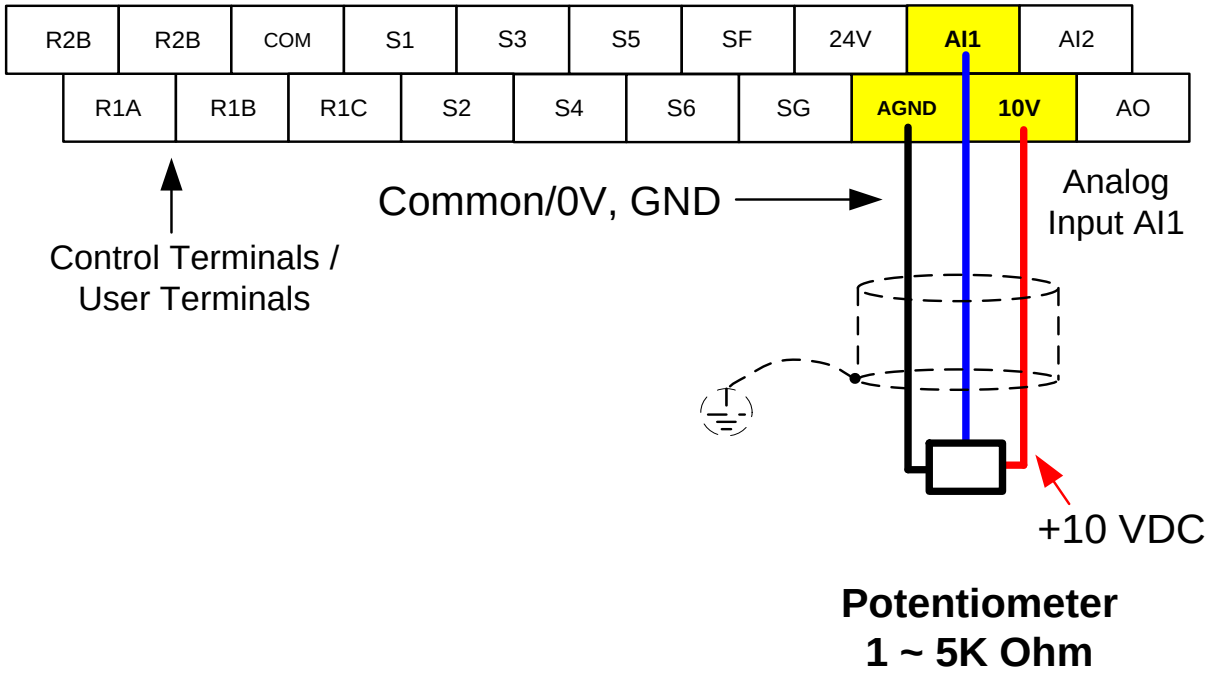

Analog Reference: 4 – 20mA (Setting 00-05 = 2)

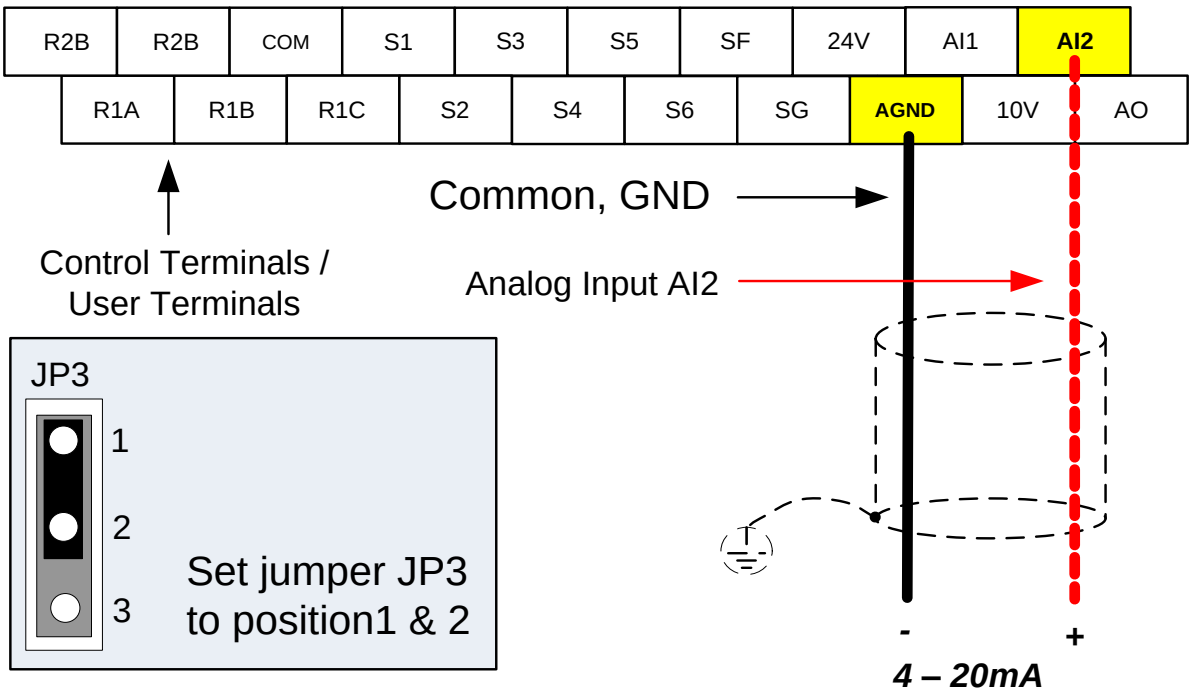

6.3 Reference from Serial Communication RS485 (00-05=5)

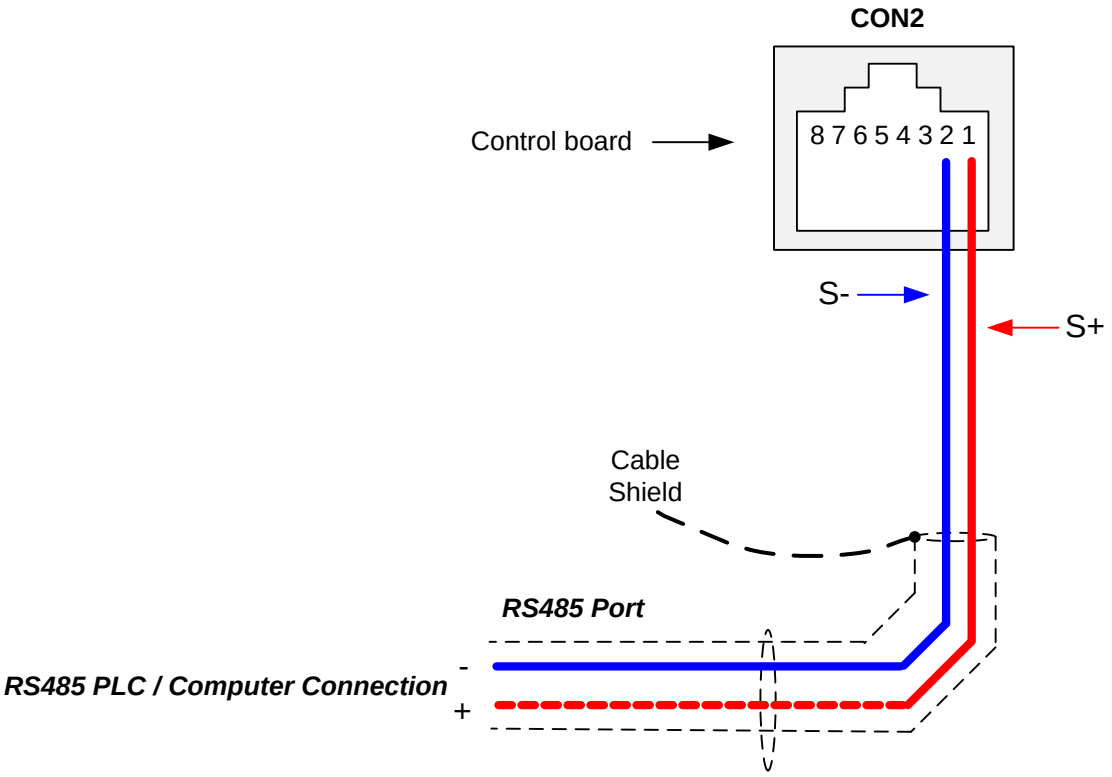

To set the speed reference for the inverter via serial communication parameter 00-05 has be set to “5” for frequency command via serial communication.

Default Communication Setting is: Address “1”, 9600 Bits/sec, 1 Start Bit, 1 Stop Bit, and No Parity

The serial communication link function uses RS485 Modbus RTU protocol and allows for:

1) Monitoring (data monitoring, function data check).
2) Frequency setting.
3) Operation command (FWD, REV, and other commands for digital input).
4) Write function data.

Frequency Reference Command Register

Inverter Frequency Reference Register: 2502 (Hexadecimal) - Bit 0 – Bit 15: 0.00 ~ 650.00 Hz

Examples:

Frequency Reference Command: 10.00 Hz (Inverter Node Address: 01)

Command String (hexadecimal): 01 06 25 02 03 E8 23 B8

To set the frequency reference to 10.00, a value of ‘1000’ (03E8h) has to be send to the inverter.

Frequency Reference Command: 30.00 Hz (Inverter Node Address: 01)

Command String (hexadecimal): 01 06 25 02 0B B8 24 44

To set the frequency reference to 30.00, a value of ‘3000’ (0BB8h) has to be send to the inverter.

Frequency Reference Command: 60.00 Hz (Inverter Node Address: 01)

Command String (hexadecimal): 01 06 25 02 17 70 2D 12

To set the frequency reference to 60.00, a value of ‘6000’ (1770h) has to be send to the inverter

Note: The last 2 bytes of the command strings consist of a CRC16 checksum, please refer to section 4.5 of the instruction manual for additional information.

6.4 Reference from Pulse Input (00-05=7)

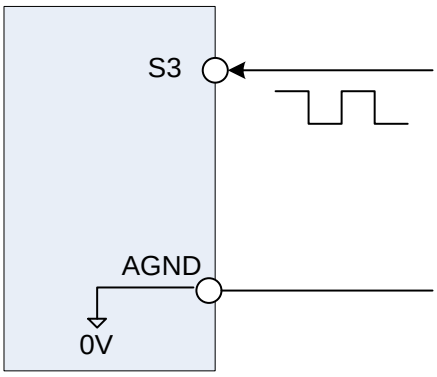

Serial pulse input

Specification
Low Input Level: 0.0 to 10 Vdc
High Input Level: 13 to 30 Vdc
Duty cycle: (ON / OFF) 30 % to 70%
Pulse Input frequency range: 10 to 200Hz

Set Pulse Input Setup as Frequency Reference

Set parameter 00-05 to 7 and 03-02 to 26 to use the pulse input terminal S3 as the frequency reference source. Next set the pulse frequency (03-27).

When 03-02=26, S3 is used for frequency measurement.

Set the following parameters to use pulse input for speed command:

00-05=7

03-02=26

03-28=1 (adjust if needed)

Example 1:
Pulse input frequency is 20Hz, frequency upper limit is 50Hz (00-12=50.00), and 03-28=1.
Inverter frequency is 20.00Hz

Example 2:
Pulse input frequency is 45Hz, frequency upper limit is 50Hz (00-12=50.00), and 03-28=1.
Inverter frequency is 45.00Hz

Example 3:
Pulse input frequency is 55Hz, frequency upper limit is 50Hz (00-12=50.00), and 03-28=1.
Inverter frequency is 50.00Hz

Example 4:
Pulse input frequency is 2000Hz, frequency upper limit is 650Hz (00-12=650.00), and 03-28=0.2.
Inverter frequency is 2000 x 0.2 = 400.00Hz

6.5 Change Frequency Unit from Hz to rpm

12-03	Custom Units (Line Speed) Display Mode
Range	【0~65535】Rpm

Set motor rated RPM for the inverter to display the actual motor speed based on the output frequency.
Motor synchronous speed = 120 x Rated frequency ÷ Number of poles.

12- 04	Custom Units (Line Speed) Display Mode
Range	【0】:Drive Output Frequency is Displayed 【1】:Line Speed is Displayed in Integer (xxxxx) 【2】:Line Speed is Displayed with One Decimal Place (xxxx.x) 【3】:Line Speed is Displayed with Two Decimal Places (xxx.xx) 【4】:Line Speed is Displayed with Three Decimal Places (xx.xxx)

Set parameter 12-04 to a value greater than 0 to display motor speed.

7. Operation Method Configuration (Run / Stop)

The inverter offers users several choices to run and stop from different sources. The most commonly used methods are described in the next sections.

Operation command is selected with parameter 00-02.

00-02: Run Command Selection

This function sets the frequency command source.

Setting Range: 0 to 3

To set parameter 00-01:
- After power-up press the **DSP/FUN** key
- Select **00 Basic Fun**
- Press **DATA/ENTER** key
- Select parameter -01 with the **UP/DOWN ▲** and **▼** keys and press the **DATA/ENTER** key.

In the parameter list move cursor to 00-01 with the **UP/DOWN** keys and press **DATA/ENTER** key to select.

00-02	Run Command Selection
Range	**0:** Keypad control **1:** External terminal control **2:** Communication control **3:** PLC

7.1 Run/Stop from the Keypad (00-02=0) – Default Setting

Use the **RUN** key to run the drive in forward direction and the **FWD/REV** key to change the motor direction. (Note: to disable reverse direction set parameter 11-00 to 1)

Press **STOP** key to stop the inverter. (Note: Stop method can be set with parameter 07-09, default is **deceleration to stop)**.



7.2 Run/Stop from External Switch / Contact or Pushbutton (00-02=1)

Use an external contact or switch to Run and Stop the inverter.

Set parameter 00-04 to 0 for 2-wire operation, multi-function input terminal S1 is set to run operation forward command.

00-02 Run Command Selection = 1

Permanent Switch / Contact

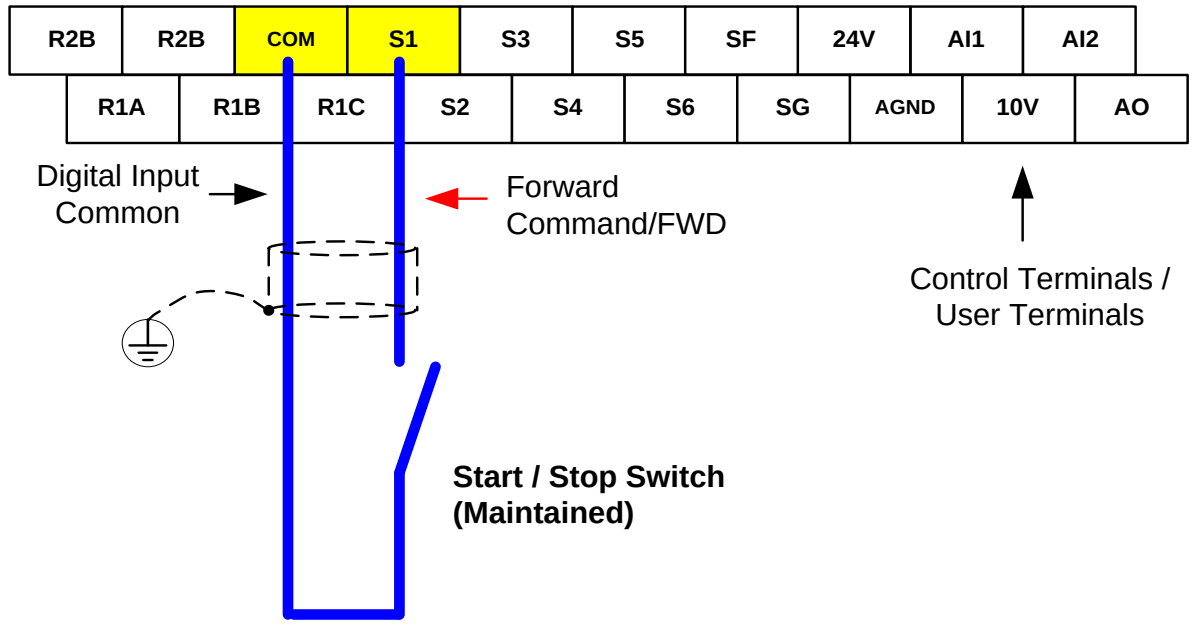

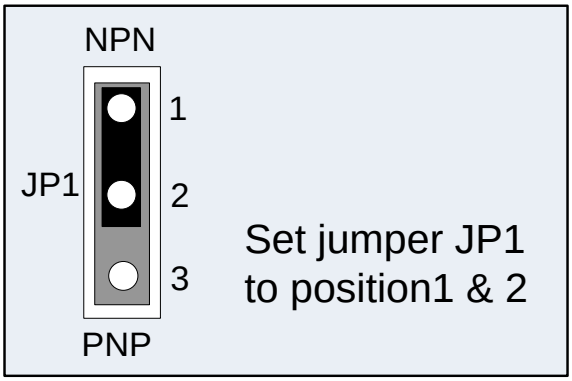

Momentary Contacts (Push Buttons)

Use push button / momentary switch to Run and Stop the inverter.

Set parameter 00-04 to 2 for 3-wire operation, multi-function input terminal S1 is set to run operation, S2 for stop operation and S3 for forward/reverse command.

00-02 Run Command Selection = 1

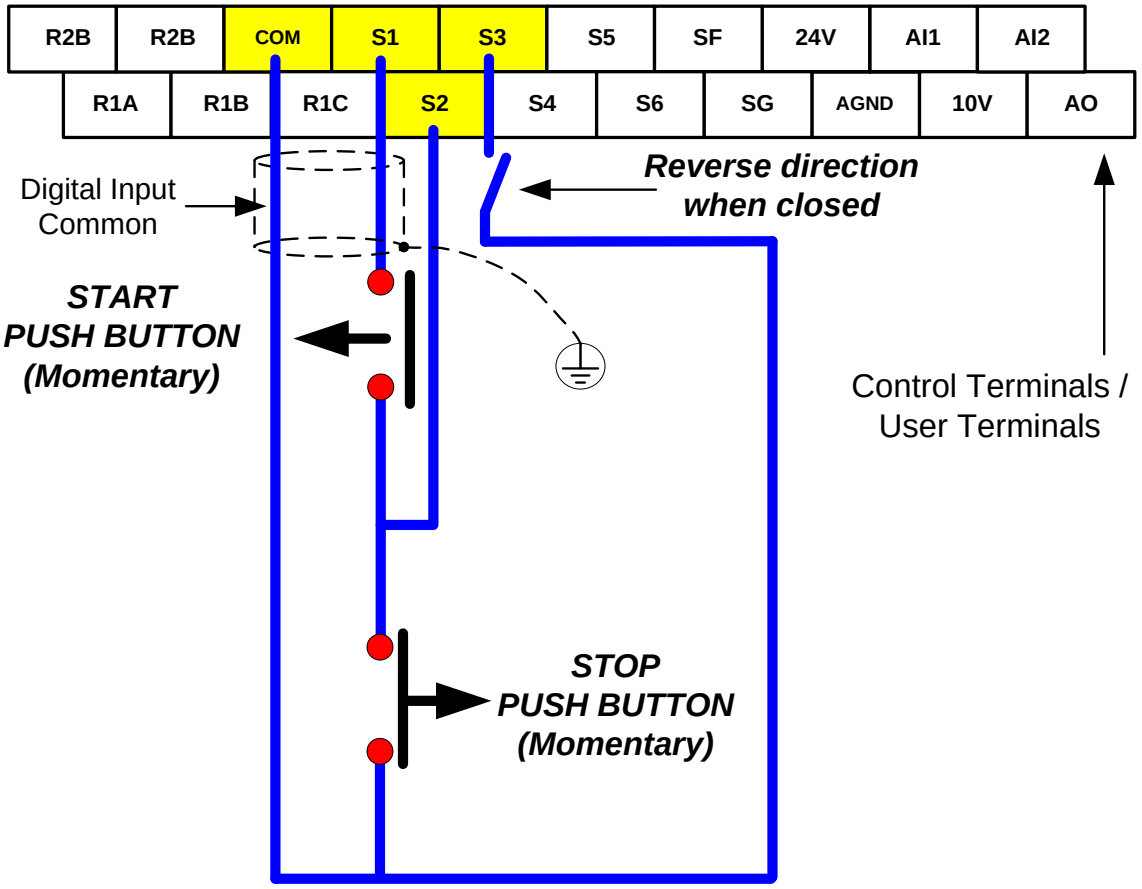

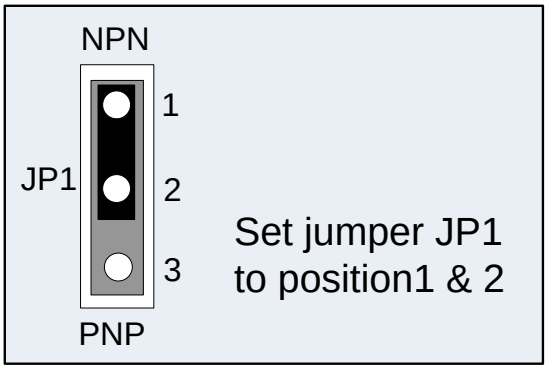

Note: Stop mode selection can be set with parameter 07-09, default is **deceleration to stop**.

7.3 Run/Stop from Serial Communication RS485 (00-02=2)

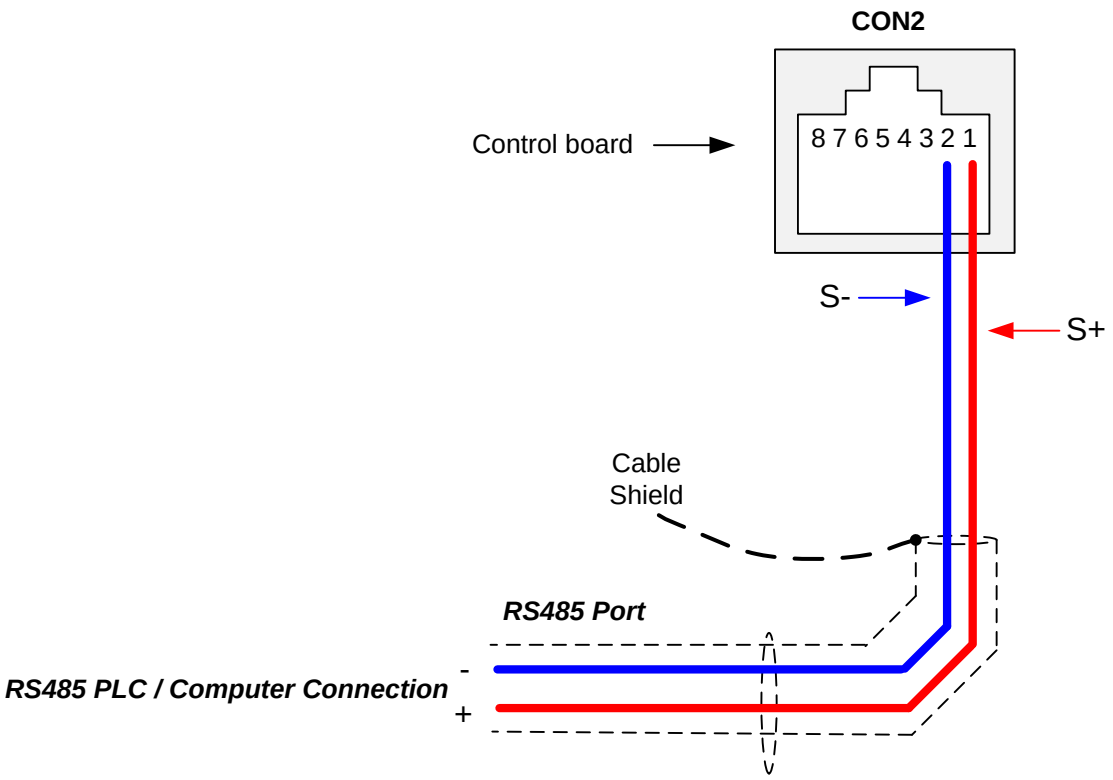

To control (Run/Stop) the inverter via serial communication parameter 00-02 has be set to a “2” for communication control.

Default Communication Setting is: Address “1”, 9600 Bits/sec, 1 Start Bit, 1 Stop Bit, and No Parity

The serial communication link function uses RS485 Modbus RTU protocol and allows for:
1) Monitoring (data monitoring, function data check).
2) Frequency setting.
3) Operation command (FWD, REV, and other commands for digital input).
4) Write function data.

Command Register

Inverter Command Register: 2501 (Hexadecimal)

Bit 0: Run Forward
Bit 1: Run Reverse
Bit 2 ~ Bit 15: Refer to the chapter XX of this manual

Examples:

Run Forward Command (Inverter Address: 01)

Command String (hexadecimal): 01 06 25 01 00 01 12 C6

Run Reverse Command (Inverter Address: 01)

Command String (hexadecimal): 01 06 25 01 00 03 93 07

Stop Command (Inverter Address: 01)

Command String (hexadecimal): 01 06 25 01 00 00 D3 06

Note: The last 2 bytes of the command strings consist of a CRC16 checksum, please refer to section 4.5 of the instruction manual for additional information.

8. Motor and Application Specific Settings

It is essential that before running the motor, the motor nameplate data matches the motor data in the inverter.

8.1 Set Motor Nameplate Data (02-01, 02-05)

02-05 Motor Rated Power

The nominal motor rated capacity is set at the factory. Please verify that the motor name plate data matches the motor rated capacity shown in parameter 02-05. The setting should only be changed when driving a motor with a different capacity.

Range: 0.1 to 37.0 kW (1HP = 0.746 kW)

To set parameter 02-05:

- After power-up press the **DSP/FUN** key
- Select **02 Motor Parameter**
- Press **READ/ ENTER** key
- Select parameter -01 with the **UP/DOWN** ▲ and ▼ keys and press the **READ/ ENTER** key.

Default values vary based on the inverter model.

02-01 Motor Rated Current

The motor rated current is set at the factory based on the inverter model. Enter the motor rated current from the motor nameplate if it does not match the value shown in parameter 02-01.

Setting range: 0.2 to 100.00A

To set parameter 02-01:

- After power-up press the **DSP/FUN** key
- Select **02 Motor Parameter**
- Press **READ/ ENTER** key
- Select parameter -01 with the **UP/DOWN** ▲ and ▼ keys and press the **READ/ ENTER** key.

8.2 Acceleration and Deceleration Time (00-14, 00-15)

Acceleration and Deceleration times directly control the system dynamic response. In general, the longer the acceleration and deceleration time, the slower the system response, and the shorter time, the faster the response. An excessive amount of time can result in sluggish system performance while too short of a time may result in system instability.

The default values suggested normally result in good system performance for the majority of general purpose applications. If the values need to be adjusted, caution should be exercised, and the changes should be in small increments to avoid system instability.

00-14 Acceleration time 1
00-15 Deceleration time 1

These parameters set the acceleration and deceleration times of the output frequency from 0 to maximum frequency and from maximum frequency to 0.

To set parameter 00-14 or 00-15:
- After power-up press the **DSP/FUN** key
- Select **00 Basic Fun**
- Press **READ/ ENTER** key
- Select parameter -14 or -15 with the **UP/DOWN ▲** and **▼** keys and press the **READ/ ENTER** key.

Acceleration and deceleration times are represented by the three most significant (high order) digits. Set acceleration and deceleration times with respect to maximum frequency. The relationship between the set frequency value and acceleration/deceleration times is as follows:

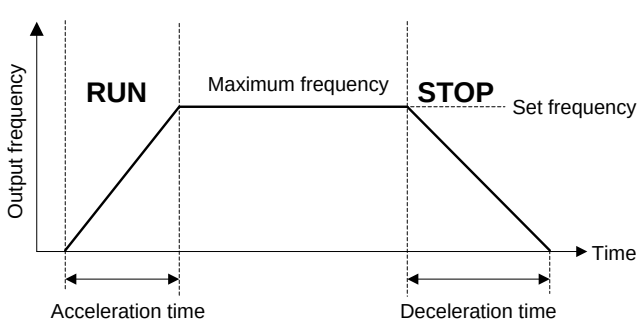

Set Frequency = Maximum Frequency

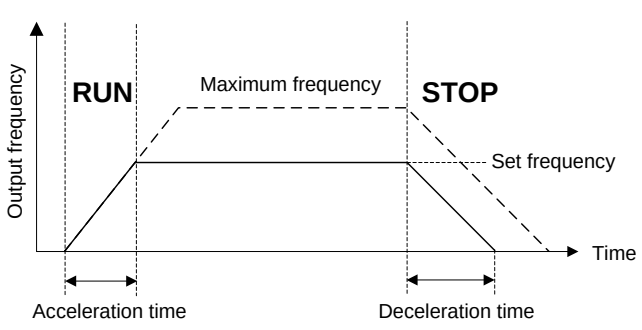

Set Frequency < Maximum Frequency

Note: If the set acceleration and deceleration times are set too low, the torque limiting function or stall prevention function can become activated if the load torque and or inertia are relatively high. This will prolong the acceleration and or deceleration times and not allow the set times to be followed. In this case the acceleration and or the deceleration times should be adjusted.

8.3 Torque Boost (V/f Curve Modification) (01-10)

This parameter sets the relationship between output frequency and output voltage. Constant torque applications have the same torque requirements at low speed as well as at high speed.

Initial Setup

For Variable Torque / Normal Duty applications set parameter 01-10 to an initial value of 0.5.

For Constant Torque / Heavy Duty applications set parameter 01-10 to an initial value of 1.0.

01-10 Torque compensation gain

This parameter sets the torque boost for motor 1.

Setting range: 0.0 to 10.0

To set parameter 01-10:

- After power-up press the **DSP/FUN** key
- Select **01 V/F Pattern**
- Press **READ/ ENTER** key
- Select parameter -10 with the **UP/DOWN ▲** and **▼** keys and press the **READ/ ENTER** key.

Increase value when:

- The wiring between the inverter and the motor very too long
- The motor size is smaller than the inverter size

Note: Gradually increase the torque compensation value and make sure the output current does not exceed inverter rated current.

Reduce value when:

- Experiencing motor vibration
- Over Current Fault
- Overload Fault

Important: Confirm that the output current at low speed does not exceed the rated output current of the inverter.



Warning: A larger than required torque compensation gain value creates over-excitation at low speeds, continued operation may cause the motor to overheat. Check the characteristics of the motor for additional information.

8.4 Rapid Stop

Deceleration time 2 is used in combination with multi-function digital input function #14 (Rapid stop). When rapid stop input is activated the inverter will decelerate to a stop using the Deceleration time 2 (00-17) and display the [E.S.] condition on the keypad.

Note: To cancel the emergency stop condition the run command has to be removed and emergency stop input deactivated.

Example: Emergency Stop Switch set for input terminal S5 (03-04 = 14).

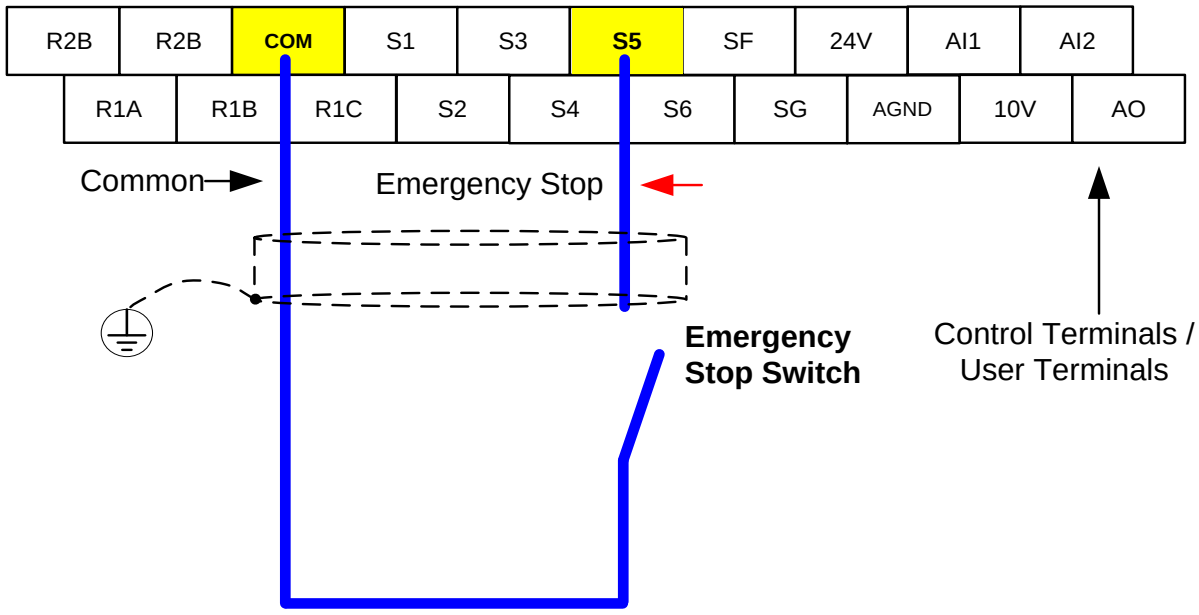

00-17	Deceleration Time 2
Range	0.1~3600.0 Sec

8.5 Forward and Reverse Jog

The jog forward command is used in combination with multi-function digital input function #6 (Jog Forward) and the jog reverse command is used in combination with multi-function digital input function #7 (Jog Reverse).

Example: Jog Forward input terminal S5 (03-04 = 06) and Jog Reverse input terminal S6 (03-05=7)

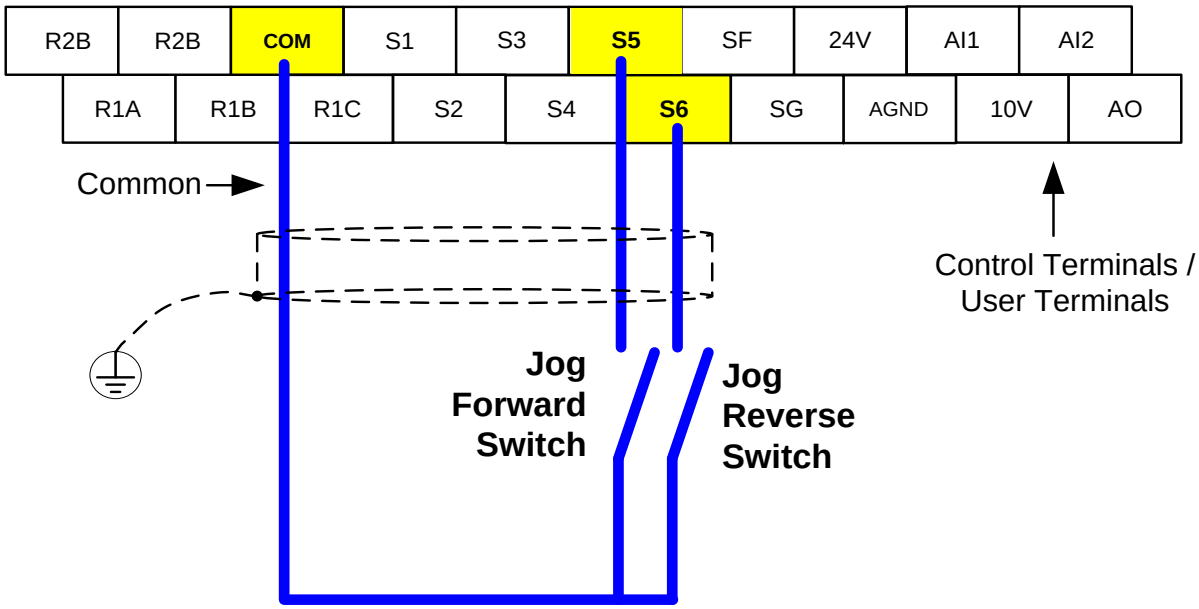

8.6 Analog Output Setup

Signal: Use parameter 04-11 to select the analog output signal for AO and parameter 04-16 to select the analog output signal for AO2.

Gain: Use parameter 04-12 to adjust the gain for AO. Adjust the gain so that the analog output (10V) matches 100% of the selected analog output signal (04-11). Use parameter 05-15 to set slope direction.

Bias: Use parameter 04-13 to adjust the bias for AO. To invert the bias use parameter 04-14.
Adjust the bias so that the analog output (0V) matches 0% of the selected analog output signal (04-11).

Example: Analog Output Wiring

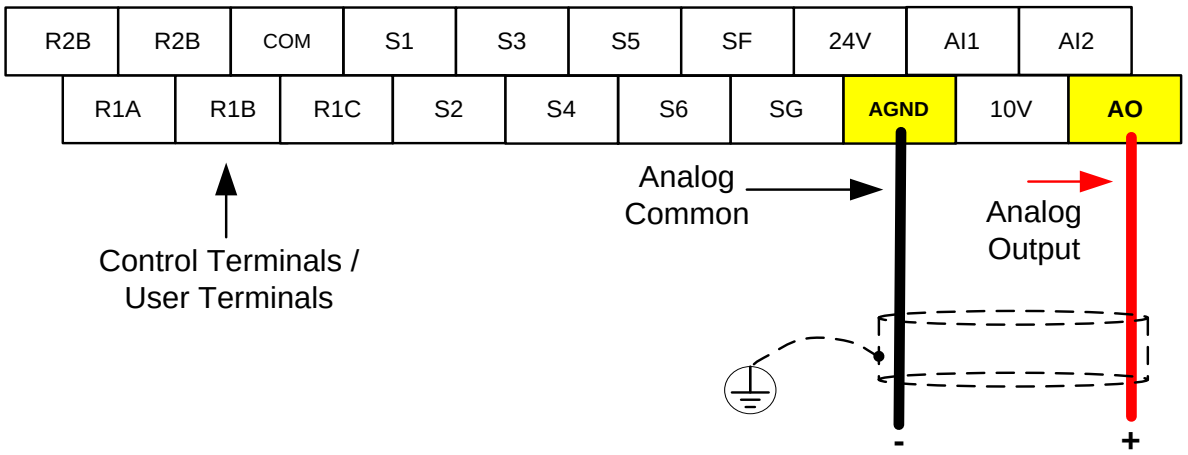

Example: Set 04-11 as required according to the table below.

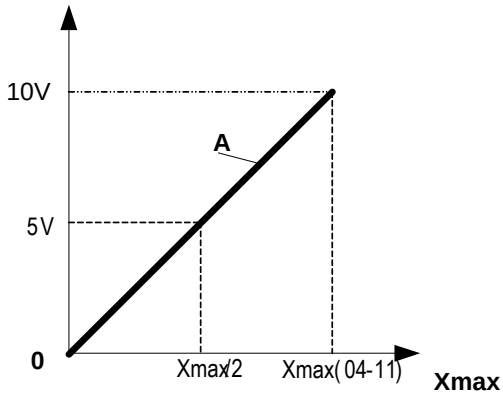

04-11	A	Xmax
【0】	Output frequency	upper frequency limit
【1】	Frequency Setting	upper frequency limit
【2】	Output voltage	Motor Rated Voltage
【3】	DC Bus Voltage	220V: 0~400V 440V: 0~800V
【4】	Output current	rated current of inverter

04-12	**AO Gain**
Range	**【0 ~ 1000】%**
04-13	**AO Bias**
Range	**【0 ~ 100】%**
04-14	**AO Bias Selection**
Range	**【0】: positive 【1】: Negative**
04-15	**AO Slope**
Range	**【0】: positive 【1】: Negative**

Note: The max output voltage is 10Vdc limited by the inverter hardware. Use external devices that require a maximum of 10Vdc signal.

9. Using PID Control for Constant Flow / Pressure Applications

9.1 What is PID Control?

The PID function in the inverter can be used to maintain a constant process variable such as pressure, flow, temperature by regulating the output frequency (motor speed). A feedback device (transducer) signal is used to compare the actual process variable to a specified setpoint. The difference between the set-point and feedback signal is called the error signal.

The PID control tries to minimize this error to maintain a constant process variable by regulating the output frequency (motor speed).

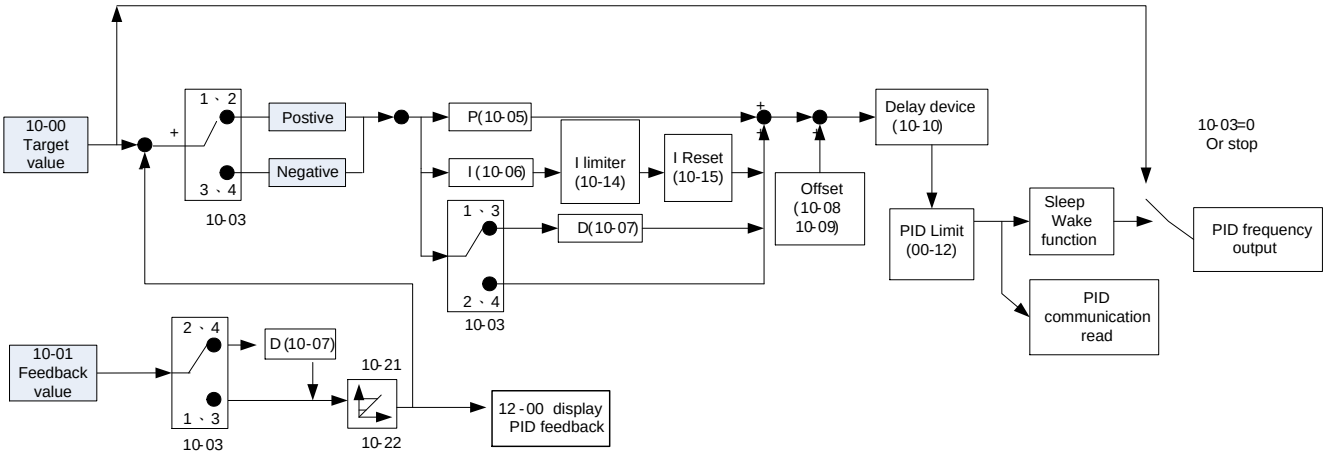

The amplitude of the error can be adjusted with the Proportional Gain parameter 10-05 and is directly related to the output of the PID controller, so the larger gain the larger the output correction.

Example 1:	**Example 2:**
Gain = 1.0	Gain = 2.0
Set-Point = 80%	Set-Point = 80%
Feedback = 78%	Feedback = 78%
Error = Set-point - Feedback = 2%	Error = Set-point - Feedback = 2%
Control Error = Gain x Error = 2%	Control Error = Gain x Error = 4%

Please note that an excessive gain can make the system unstable and oscillation may occur.

The response time of the system can be adjusted with the Integral Gain set by parameter 10-06. Increasing the Integral Time will make the system less responsive and decreasing the Integral Gain Time will increase response but may result in instability of the total system.

Slowing the system down too much may be unsatisfactory for the process. The end result is that these two parameters in conjunction with the acceleration (00-14) and deceleration (00-15) times are adjusted to achieve optimum performance for a particular application.

For typical fan and pump applications a Proportional Gain (10-05) of 2.0 and an Integral Time (10-06) of 5.0 sec. is recommended.

10-03 PID control mode

PID control can be enabled by setting parameter 00-05 to 6 and parameter 10-03 to a value greater than 0.

10- 03	**PID Mode Selection**	
Range	**【0】:PID Function disabled**	
	【1】:FWD Characteristic.	**Deviation is D-controlled**
	【2】:FWD Characteristic.	**Feedback is D-controlled**
	【3】:REV Characteristic.	**Deviation is D-controlled**
	【4】:REV Characteristic.	**Feedback is D-controlled**

Commonly used PID control modes

1: Forward operation: PID operation enabled, motor speeds increases when feedback signal is smaller than set-point (most fan and pump applications)

3: Reverse operation: PID operation enabled, motor slows down when feedback signal is smaller than set-point (e.g. level control applications)

To set parameter 10-03:

- After power-up press the **MODE** key
- Select 10-03 using the arrow keys and up/down keys
- Press **</ENTER** key
- Set parameter 10-03 using the arrow keys and **</ENTER** key to save setting.

Important: To use the PID function parameter 00-05 (Main Frequency Source Selection) has to be set to 6 for PID reference.

9.2 Connect Transducer Feedback Signal (10-01)

The PID function in the inverter

Depending on the type of feedback transducer used, the inverter can be setup for either 0-10V or a 4-20mA feedback transducer.

Feedback Signal 4 – 20mA (10-01 = 2)

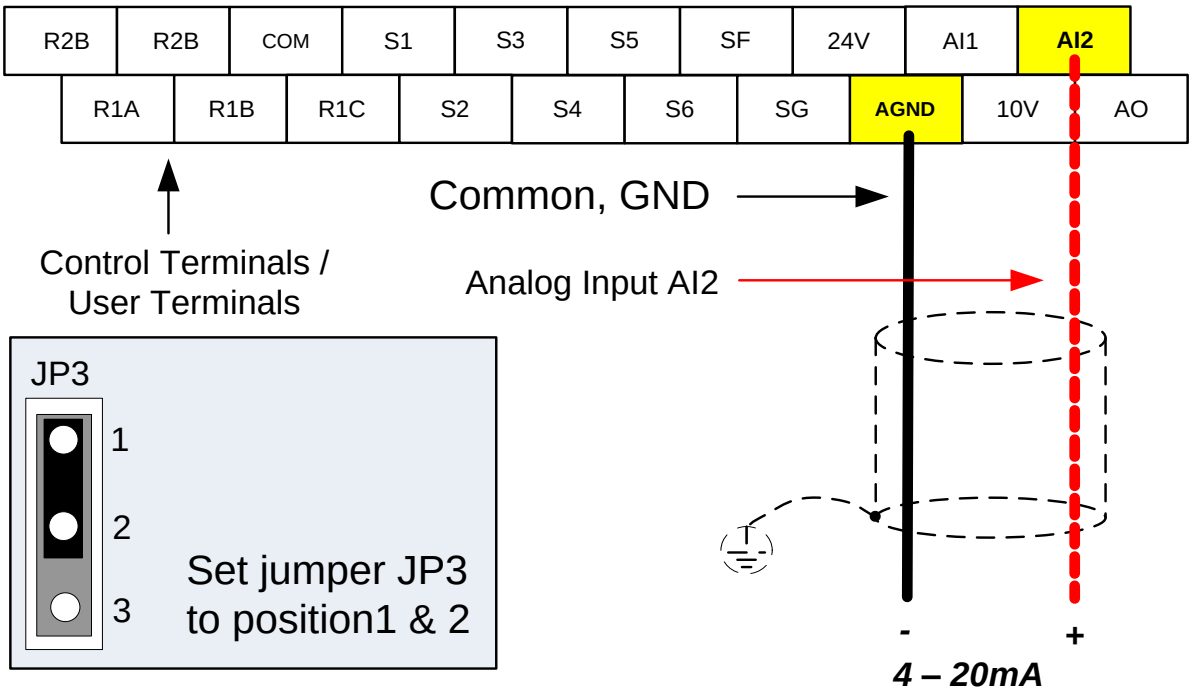

Feedback Signal 0 – 10V (10-01 = 1)

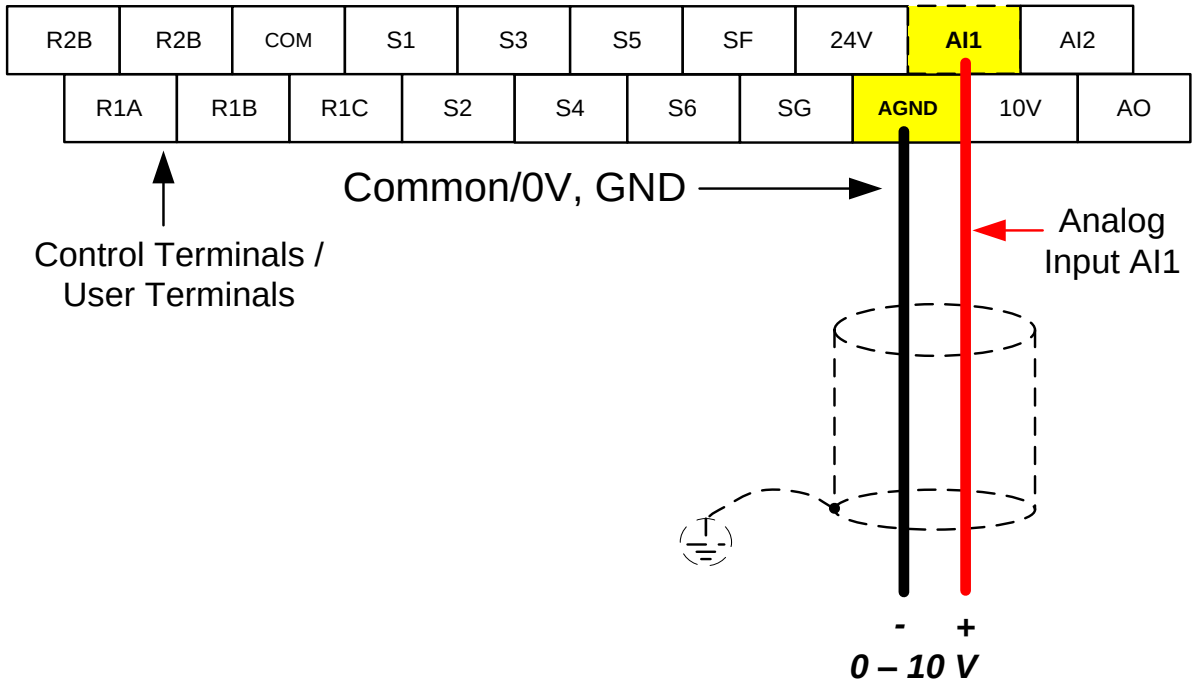

9.3 Engineering Units

PID Feedback Display Scaling

The PID feedback signal can be scaled to represent actual engineering units. Use parameter 10-21 to set the feedback signal gain for the feedback signal range maximum and parameter 10-22 to the feedback signal minimum.

Example:

Feedback signal is a pressure transducer (0-10V/0-20mA) with a range of 0 – 200 PSI
0V/0mA = 0 PSI, 10V/20mA = 200 PSI.

Set parameter 10-21 to 200 maximum of transducer range (100%).
Set parameter 10-22 to 0 minimum of transducer range (0%).

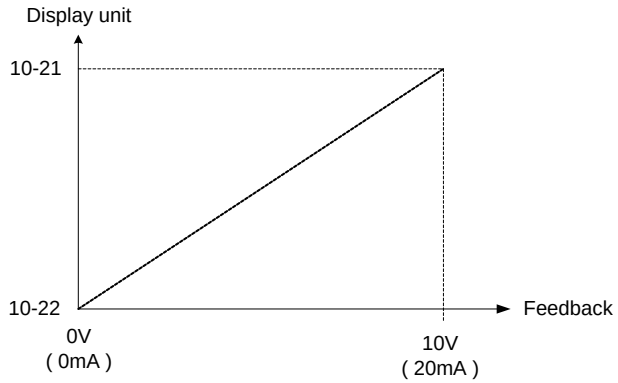

9.4 Sleep / Wakeup Function

The PID Sleep function can be used to prevent a system from running at low speeds and is frequently used in pumping application. The PID Sleep function is turned on setting parameter 10-17 to a value greater than 0. The inverter output turns off when the PID output falls below the PID sleep level (10-17) for the time specified in the PID sleep delay time parameter (10-18).

The inverter wakes up from a sleep condition when the PID output (Reference frequency) rises above the PID wake-up frequency (10-19) for the time specified in the PID wake-up delay time (10-20).

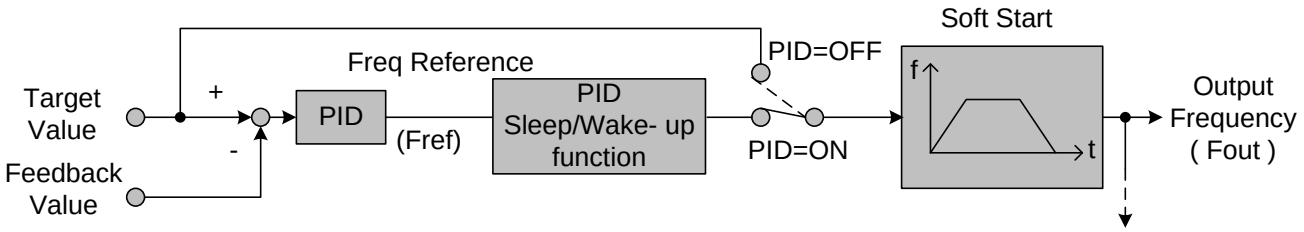

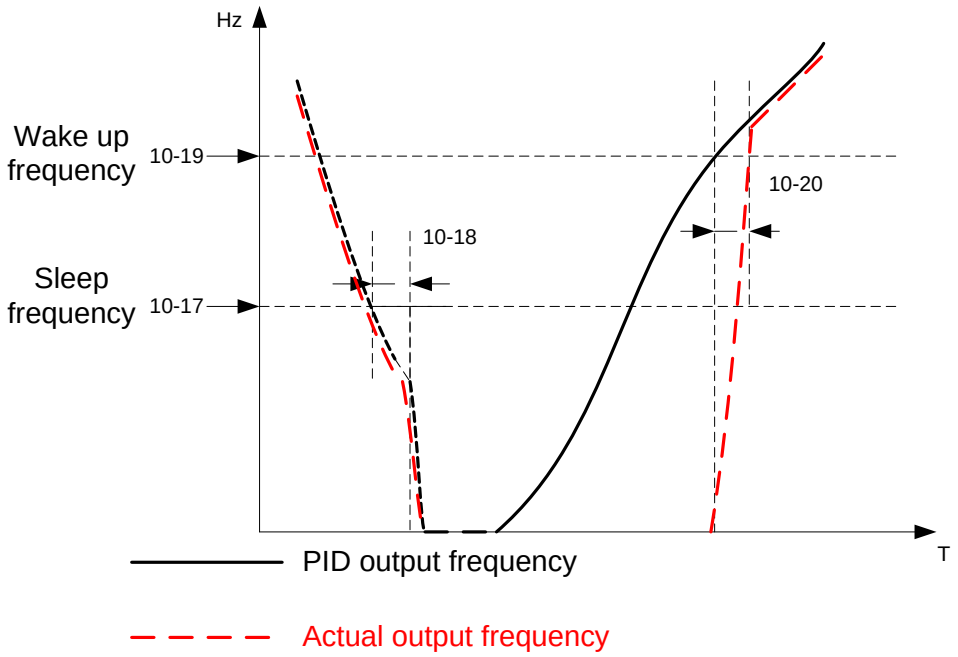

PID Sleep Function

10. Troubleshooting, Fault Diagnostics and Maintenance

10.1 General

Inverter fault detection and early warning / self-diagnosis function. When the inverter detects a fault, a fault message is displayed on the keypad.

When the inverter detects a warning / self-diagnostics error, the digital operator will display a warning or self-diagnostic code, the fault output does not energize in this case. Once the warning is removed, the system will automatically return to its original state.

10.2 Fault Detection Function

When a fault occurs, please refer to Table 10.2.1 for possible causes and take appropriate measures.

Use one of the following methods to restart:
1. Set one of multi-function digital input terminals (03-00 ~ 03-05) to 17 (Fault reset); activate input
2. Press the reset button on the keypad.
3. Power down inverter wait until keypad goes blank and power-up the inverter again.

When a fault occurs, the fault message is stored in the fault history (see group 12 parameters).

Table 5.2.1 Fault information and possible solutions

LED display	Description	Cause	Possible solutions
OV **Over voltage** OU	DC bus voltage exceeds the OV detection level: 410Vdc: 230V class 820Vdc: 460V class (For 440V class, if input voltage 01-14 is set lower than 460V, the OV detection value will is decreased to 700Vdc).	• Deceleration time set too short, resulting in regenerative energy flowing back from motor to the inverter. • The inverter input voltage is too high. • Use of power factor correction capacitors. • Excessive braking load. • Braking transistor or resistor defective. • Speed search parameters set incorrectly.	• Increase deceleration time • Reduce input voltage to comply with the input voltage requirements or install an AC line reactor to lower the input voltage. • Remove the power factor correction capacitor. • Use dynamic braking unit. • Replace braking transistor or resistor. • Adjust speed search parameters.

LED display	Description	Cause	Possible solutions
Inverter faults that cannot be reset			
LV **Under voltage** LU	DC bus voltage is lower than the UV detection level or the pre-charge contactor is not active while the inverter is running. 190Vdc: 230V class; 380Vdc: 460V class; The detection value can be adjusted by 07-13).	• The input voltage is too low. • Input phase loss. • Acceleration time set too short. • Input voltage fluctuation. • Pre-charge contactor damaged. • DC bus voltage feedback signal value not incorrect.	• Check the input voltage. • Check input wiring. • Increase acceleration time. • Check power source • Replace pre-charge contactor • Replace control board or complete inverter.
OH **Heatsink overheat** OH	The temperature of the heat sink is too high. Note: when OH fault occurs three times within five minutes, it is required to wait 10 minutes before resetting the fault.	• Ambient temperature too high. • cooling fan failed • Carrier frequency set too high. • Load too heavy.	• Install fan or AC to cool surroundings. • Replace cooling fan. • Reduce carrier frequency. • Reduce load / Measure output current
OH **Heatsink overheat** OH-C	The temperature of the heat sink is too high. Note: when OH fault occurs three times within five minutes, it is required to wait 10 minutes before resetting the fault.	• Ambient temperature too high. • cooling fan failed • Carrier frequency set too high. • Load too heavy.	• Install fan or AC to cool surroundings. • Replace cooling fan. • Reduce carrier frequency. • Reduce load / Measure output current
EEPROM Fault EPr	EEPROM fault	• EEPROM malfunctioned	• Contact TWMC.
CT Fault CtEr	Input voltage fault	• Abnormal input voltage, too much noise or malfunctioning control board.	• Check input voltage signal and the voltage on the control board.

Inverter faults that can be reset manually or via automatic restart

LED display	Description	Cause	Possible solutions
OC-A over current at acceleration 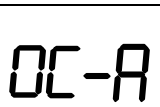	The inverter output current exceeds the overcurrent level (200% of the inverter rated current).	• Acceleration / Deceleration time is too short. • Contactor at the inverter output side. • A special motor or applicable capacity is greater than the inverter rated value. • Short circuit or ground fault.	• Extend acceleration / deceleration time. • Check the motor wiring. • Disconnect motor and try running inverter.
OC-C over current at fixed speed 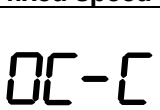	The inverter output current exceeds the overcurrent level (200% of the inverter rated current).	• Acceleration / Deceleration time is too short. • Contactor at the inverter output side. • A special motor or applicable capacity is greater than the inverter rated value. • Short circuit or ground fault.	• Extend acceleration / deceleration time. • Check the motor wiring. • Disconnect motor and try running inverter.
OC-d over current at deceleration 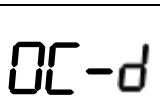	The inverter output current exceeds the overcurrent level (200% of the inverter rated current).	• Acceleration / Deceleration time is too short. • Contactor at the inverter output side. • A special motor or applicable capacity is greater than the inverter rated value. • Short circuit or ground fault.	• Extend acceleration / deceleration time. • Check the motor wiring. • Disconnect motor and try running inverter.
OC-S over current at start 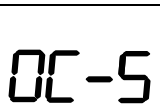	The inverter output current exceeds the overcurrent level (200% of the inverter rated current).	• Acceleration / Deceleration time is too short. • Contactor at the inverter output side. • A special motor or applicable capacity is greater than the inverter rated value. • Short circuit or ground fault.	• Extend acceleration / deceleration time. • Check the motor wiring. • Disconnect motor and try running inverter.
OV-C over voltage during operation / deceleration 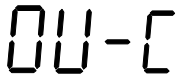	Excessive Voltage during operation/ deceleration	• Deceleration time setting too short or excessive load inertia • Power voltage varies widely (fluctuates)	• Set a longer deceleration time • Consider use of a brake resistor and/or brake module (in case of 400V models) • Consider use of a reactor at the power input side
PF input phase loss 	Input phase Loss	• Abnormal fluctuations in the main circuit voltage	• Check the main circuit power supply wiring. • Check the power supply voltage
OC over current 	The inverter output current exceeds the overcurrent level (200% of the inverter rated current).	• Acceleration / Deceleration time is too short. • Contactor at the inverter output side. • A special motor or applicable capacity is greater than the inverter rated value. • Short circuit or ground fault.	• Extend acceleration / deceleration time. • Check the motor wiring. • Disconnect motor and try running inverter.

LED display	Description	Cause	Possible solutions
Ud-C **Under Current** 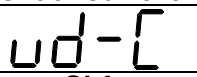	Output under current detection	• Output current < Output under current detection level.	• Set level according to application.
OL1 **Motor overload** 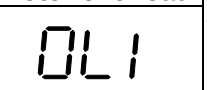	Internal motor overload protection tripped, active when protection curve 08-05 = xxx1.	• Voltage setting V/F mode too high, resulting in over-excitation of the motor. • Motor rated current (02-01) set incorrectly. • Load too heavy.	• Check V/f curve. • Check motor rated current • Check and reduce motor load, check and operation duty cycle.
OL2 **Motor overload** 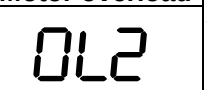	Internal motor overload protection tripped, active when protection curve 08-05 = xxx1.	• Voltage setting V/F mode too high, resulting in over-excitation of the motor. • Motor rated current (02-01) set incorrectly. • Load too heavy.	• Check V/f curve. • Check motor rated current • Check and reduce motor load, check and operation duty cycle.
OL3 **Over Torque** 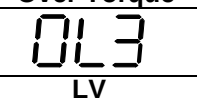	Over torque	• Motor load to big • Parameter 8-15, 8-16 not set correctly	• Increase inverter size • Adjust parameter 08-15, 08-16.
LV **low voltage during operation** 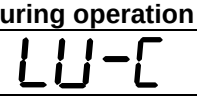	Voltage too low during operation	• Power voltage too low • Input power voltage fluctuates too much	1.Improve power quality 2.Consider adding a reactor at the power input side
OVSP **Over Speed** 	Motor speed too high	• Motor rotation speed greatly exceeds set speed	1.Motor load too big 2.Check set speed
LIFE 1 	Inrush current suppression circuit life expectancy alarm	• Inrush current suppression circuit maintenance required	1. Consult factory
LIFE 2 	Control Circuit Capacitor life expectancy alarm	• Control Circuit Capacitors maintenance required	1. Consult factory
LIFE 3 	Main Circuit Capacitor life expectancy alarm	• DC-Bus Capacitors maintenance required	1. Consult factory

Keypad Operation Error Codes

LED display	Description	Cause	Possible solutions
LOC Locked 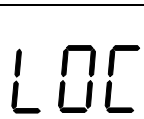	1.Parameter already locked 2.Motor direction locked 3.Parameter password (13-07) enabled	• Attempt to modify frequency parameter while 13-06>0. • Attempt to reverse direction when 11-00=1 • Parameter (13 - 07) enabled, set the correct password will show LOC.	• Adjust 13-06 • Adjust 11-00
Err1 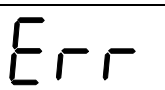	Keypad operation error	• Press ▲ or ▼while 00-05/00-06>0 or running at preset speed. • Attempting to modify a parameter that cannot be modified during operation (refer to the parameter list)	• The ▲ or▼ is available for modifying the parameter only when 00-05/00-06=0 • Modify the parameter in STOP mode.
Err2 	Parameter setting error	• 00-13 is within the range of (11-08 ±11-11) or (11-09±11-11) or (11-10±11-11) • 00-12≦00-13 • Set 00-05 and 00-06 to the same value • When 01-00≠7, modify parameter 01-01~01-09	• Modify 11-08~11-10 or 11-11 Set 00-12>00-13
Err4 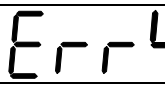	CPU performed an illegal interrupt	• External noise	• Consult factory
Err5 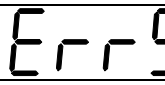	Modification of parameter is not available in communication	• Control command sent during communication • Attempt to modify the function 09-02~ 09-05 during communication	• Issue enable command before communication • Set parameters 09-02~09-05 function before communication
Err6 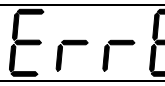	Communication failed	• Wiring error • Communication parameter setting error. • Incorrect communication protocol	• Check hardware and wiring • Check Functions(09-00~09- 05)
Err7 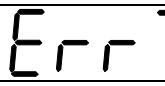	Parameter conflict	• Attempt to modify parameter 13-00/13-08. • Voltage and current detection circuit not working properly.	• Consult factory if unable to reset inverter.

Special Condition Error Codes		
LED display	**Fault**	**Description**
StP0 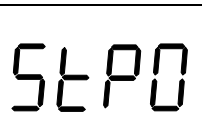	Zero speed at stop	Occurs when preset frequency <0.1Hz
StP1 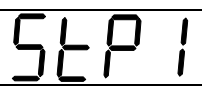	Fail to start directly On power up.	• If the inverter is set for external terminal control mode (00-02/00-03=1) and direct start is disabled (07-04=1) • The inverter cannot be started and will flash STP1. • The run input is active at power-up, refer to descriptions of (07-04).
StP2 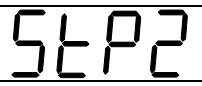	Keypad Stop Operated when inverter in external Control mode.	• If the Stop key is pressed while the inverter is set to external control mode (00-02/00-03=1) then'STP2' flashes after stop. • Release and re-activate the run contact to restart the inverter.
E.S. 	External Rapid stop	When external rapid stop input is activated the inverter will decelerate to stop and the display will flash with E.S. message.
b.b. 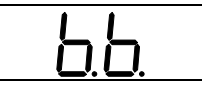	External base block	When external base block input is activated the inverter stops immediately and then the display will flash with b.b. message.
PdEr 	PID feedback loss	PID feedback loss is detected.
PdEr 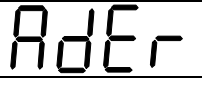	Auto-tuning error	• Motor nameplate data incorrect. • Emergency stop activated while during auto-tuning.
FIre 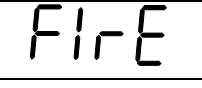	Fire Mode	• Software version < 1.1, fire mode is enabled when 08-17 = 1 • Software version >= 1.1, fire mode is enabled when 03-00 ~ 03-05 = 28 • Keypad display shows FIrE • In fire mode inverter will run at full speed.

10.3 General Troubleshooting

Status	Check	Possible Solution
Motor runs in wrong direction	Check inverter output wiring.	Wiring must match U, V, and W terminals of the motor.
	Check control terminal wiring.	Check for correct wiring.
Unable to regulate motor speed.	Check control terminal wiring.	Check for correct wiring.
	Check operation mode.	Check the Frequency Source set in parameters 00-05/00-06.
	Excessive load.	Reduce the load.
Motor running speed too high or too low	Check motor data (poles, voltage…).	Confirm the motor specifications.
	Check gear ratio.	Confirm gear ratio.
	Check maximum output frequency 00-12/01-02.	Confirm maximum output frequency
Motor speed unstable	Excessive load.	Reduce the load.
	Motor load fluctuates.	1. Minimize the variation of the load. 2. Consider increasing inverter size and the motor.
	Input voltage unstable.	1. Consider adding an AC reactor at the input power side when using single-phase power.
		2. Check wiring when using three-phase power.
Motor does not run	Check input power connected and input terminals. Check if charging indicator is lit.	1. Turn input power on. 2. Cycle input power. 3. Input voltage not correct. 4. Input wiring not fastened
	Check output voltage across output terminals T1, T2, and T3.	Cycle input power.
	Check motor overload settings.	Reduce motor load.
	Are there any abnormalities in the inverter?	Check wiring and correct if necessary.
	Check forward or reverse run command.	
	Check analog frequency reference signal.	Correct analog input signal.
	Check operation mode setting 00-03.	Run inverter through via the keypad

10.4 Routine and Periodic Inspection

To ensure stable and safe inverter operation it is recommended to perform inverter maintenance at regular intervals. Use the checklist below as a guideline for inspection.

Disconnect power and wait approximately 5 minutes to make sure no voltage is present on the output terminals before carrying out any inspection or maintenance.

Items	Details	Checking period		Methods	Criteria	Remedies
		Daily	1Year			
Environment & Ground connection						
Ambient conditions on site	Confirm ambient temperature and relative humidity on site	◎		Measure with thermometer and hygrometer	Temperature: -10 – 40°C (14-120°F) Humidity: Below 95%RH	Improve the ambient or relocate the drive to a better area.
	Are there flammable materials close to the inverter?	◎		Visual check	Keep area clear	
Installation Grounding	Any unusual vibration from surrounding machine	◎		Visual, hearing check	Keep area clear	Secure screws
	Is the grounding resistance correct?		◎	Measure the resistance with a multi-meter	200Vclass: below 100Ω	Improve the grounding if needed.
Terminals & Wiring						
Connection terminals	Check for loose terminals		◎	Visual check Check with a screwdriver	Correct installation requirement	Secure terminals and remove rust
	Check for damage to base of inverter		◎			
	Check for corroded Terminals		◎			
Wiring	Check for broken wires		◎	Visual check	Correct wiring requirement	Rectify as necessary
	Check wire insulation		◎			
Input Voltage						
Input power voltage	Check input volatge	◎		Measure the voltage with a multi-meter	Voltage must conform with the spec.	Improve input voltage if necessary.

Circuit boards and components						
Printed circuit board	Check for damage to PCBs		◎	Visual check	Correct component condition	Clean or replace the circuit board
	Check for discolored, overheated, or burned parts		◎			
Capacitor	Check for unusual odor or leakage	◎				Replace capacitor or inverter
	Check for any physical damage or protrusion		◎			
Power component	Check for any dust or debris		◎			Clean components
	Check resistance between each terminals		◎	Measure with a multi-meter	No short circuit or faulty three-phase output	Consult factory
Peripheral device						
Rheostat	Whether rheostat wiring or connector are damaged		◎	Visual check	No abnormalities	Replacement rheostat
Electromagnetic Contactor	Check contacts and connections for any abnormality	◎				Replacement Contactor
	Unusual vibration and noise	◎		hearing check		
Reactor	Is there any abnormalities	◎		Visual check		Replacement Reactor
Cooling System						
Cooling fan	Unusual vibration and noise		◎	Visual or hearing check	Correct cooling	Consult with the supplier
	Excessive dust or debris	◎		Visual check		Clean the fan
Heat sink	Excessive dust or debris	◎				Clean up debris or dust
Ventilation Path	Is the ventilation path blocked	◎				Clear the path

10.5 Routine Maintenance

To ensure stable and safe inverter operation it is recommended to perform routine inverter maintenance at regular intervals. Use the checklist below as a guideline for inspection.

1. Maintenance Check List

• Ensure that temperature and humidity where the inverter is installed falls within the specification, make sure correct ventilation is provided.
• For replacement of a failed or damaged inverter consult factory.
• Ensure that the installation area is free from dust and any other debris.
• Check and ensure that the ground connections are secure and correct.
• Terminal screws cannot be loose, tighten terminal for power input and output of the inverter with power turned off.
• Do not perform any insulation test on the control circuit.

2. Insulation test method

Single Phase

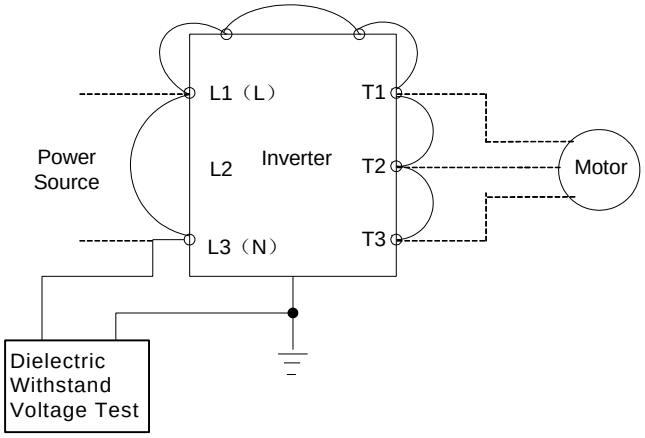

Three Phase

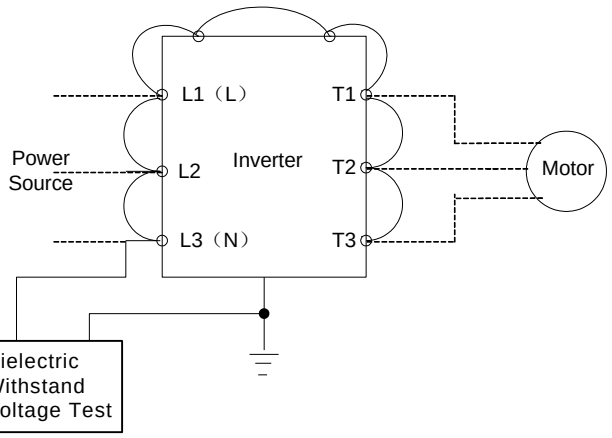

Appendix: UL Instructions

Danger

Electric Shock Hazard

Do not connect or disconnect wiring while the power is on.
Failure to comply will result in death or serious injury.

Warning

Electric Shock Hazard

Do not operate equipment with covers removed.
Failure to comply could result in death or serious injury.
The diagrams in this section may show inverters without covers or safety shields to show details. Be sure to reinstall covers or shields before operating the inverters and run the inverters according to the instructions described in this manual.

Always ground the motor-side grounding terminal.
Improper equipment grounding could result in death or serious injury by contacting the motor case.

Do not touch any terminals before the capacitors have fully discharged.
Failure to comply could result in death or serious injury.
Before wiring terminals, disconnect all power to the equipment. The internal capacitor remains charged even after the power supply is turned off. After shutting off the power, wait for at least the amount of time specified on the inverter before touching any components.

Do not allow unqualified personnel to perform work on the inverter.
Failure to comply could result in death or serious injury.
Installation, maintenance, inspection, and servicing must be performed only by authorized personnel familiar with installation, adjustment, and maintenance of inverters.

Do not perform work on the inverter while wearing loose clothing, jewelry, or lack of eye protection.
Failure to comply could result in death or serious injury.
Remove all metal objects such as watches and rings, secure loose clothing, and wear eye protection before beginning work on the inverter.

Do not remove covers or touch circuit boards while the power is on.
Failure to comply could result in death or serious injury.

Warning

Fire Hazard

Tighten all terminal screws to the specified tightening torque.
Loose electrical connections could result in death or serious injury by fire due to overheating of electrical connections.

Do not use an improper voltage source.
Failure to comply could result in death or serious injury by fire.
Verify that the rated voltage of the inverter matches the voltage of the incoming power supply before applying power.

Do not use improper combustible materials.
Failure to comply could result in death or serious injury by fire. Attach the inverter to metal or other noncombustible material.

NOTICE

Observe proper electrostatic discharge procedures (ESD) when handling the inverter and circuit boards.
Failure to comply may result in ESD damage to the inverter circuitry.

Never connect or disconnect the motor from the inverter while the inverter is outputting voltage.
Improper equipment sequencing could result in damage to the inverter.

Do not use unshielded cable for control wiring.
Failure to comply may cause electrical interference resulting in poor system performance. Use shielded twisted-pair wires and ground the shield to the ground terminal of the inverter.

Do not modify the inverter circuitry.
Failure to comply could result in damage to the inverter and will void warranty. TECO is not responsible for any modification of the product made by the user. This product must not be modified.

Check all the wiring to ensure that all connections are correct after installing the inverter and connecting any other devices.
Failure to comply could result in damage to the inverter.

❖ UL Standards

The UL/cUL mark applies to products in the United States and Canada and it means that UL has performed product testing and evaluation and determined that their stringent standards for product safety have been met. For a product to receive UL certification, all components inside that product must also receive UL certification.



UL/cUL Mark

❖ UL Standards Compliance

This inverter is tested in accordance with UL standard UL508C and complies with UL requirements. To ensure continued compliance when using this inverter in combination with other equipment, meet the following conditions:

■ Installation Area

Do not install the inverter to an area greater than pollution severity 2 (UL standard).

■ Main Circuit Terminal Wiring

UL approval requires crimp terminals when wiring the inverter's main circuit terminals. Use crimping tools as specified by the crimp terminal manufacturer. TECO recommends crimp terminals made by NICHIFU for the insulation cap.
The table below matches inverter models with crimp terminals and insulation caps. Orders can be placed with a TECO representative or directly with the TECO sales department.

Closed-Loop Crimp Terminal Size

Drive Model	Wire Gauge mm2 , (AWG)		Terminal	Crimp Terminal	Tool	Insulation Cap
E510	R/L1 / S/L2 / T/L3	U/T1 / V/T2 / W/T3	Screws	Model No.	Machine No.	Model No.
201	2.1 (14)		M3.5	R2-3.5	Nichifu NH 1 / 9	TIC 2
202	3.3(12)		M4	R3.5-4	Nichifu NH 1 / 9	TIC 3.5
202-H3	2.1 (14)		M3.5	R2-3.5	Nichifu NH 1 / 9	TIC 2
205	5.3(10)		M4	R5.5-4	Nichifu NH 1 / 9	TIC 5.5
210	8.4(8)		M5	R8-5	Nichifu NH 1 / 9	TIC 8
220	21.2(4)		M5	R22-5	Nichifu NOP 150H	TIC 22
402	2.1 (14)		M3.5	R2.3.5	Nichifu NH 1 / 9	TIC 2
405	2.1 (14)		M4	R2.3.5	Nichifu NH 1 / 9	TIC 2
415	8.4(8)		M5	R8-5	Nichifu NH 1 / 9	TIC 8
425	8.4(8)		M5	R8-5	Nichifu NH 1 / 9	TIC 8

❖ Type 1

During installation, all conduit hole plugs shall be removed, and all conduit holes shall be used.

Recommended Input Fuse Selection

Drive Model E510	Fuse Type	
	Manufacturer: Bussmann / FERRAZ SHAWMUT	
	Model	Fuse Ampere Rating (A)
	230 V Class Single / Three-Phase Drives	
2P5-HXXX	Bussmann 20CT	690V 20A
201-HXXX	Bussmann 20CT	690V 20A
202-HXXX	Bussmann 35FE	690V 35A
203-HXXX	Bussmann 50FE	690V 50A
2P5-H3XX	Bussmann 20CT	690V 20A
201-H3XX	Bussmann 20CT	690V 20A
202-H3XX	Bussmann 20CT	690V 20A
203-H3XX	Bussmann 30FE	690V 30A
205-XXXX	Bussmann 50FE	690V 50A
208-XXXX	Bussmann 63FE	690V 63A
210-XXXX	FERRAZ SHAWMUT A50QS100-4	500V 100A
215-XXXX	Bussmann 120FEE / FERRAZ A50QS150-4	690V 120A / 500V 150A
220-XXXX	FERRAZ SHAWMUT A50QS150-4	500V 150A

Drive Model E510	Fuse Type	
	Manufacturer: Bussmann / FERRAZ SHAWMUT	
	Model	Fuse Ampere Rating (A)
	460 V Class Three-Phase Drives	
401-XXXX	Bussmann 10CT	690V 10A
402-XXXX	Bussmann 16CT	690V 16A
403-XXXX	Bussmann 16CT	690V 16A
405-XXXX	Bussmann 25ET	690V 25A
408-XXXX	Bussmann 40FE	690V 40A
410-XXXX	Bussmann 50FE	690V 50A
415-XXXX	Bussmann 63FE	690V 63A
420-XXXX	Bussmann 80FE	690V 80A
425-XXXX	FERRAZ SHAWMUT A50QS100-4	500V 100A

Motor Over Temperature Protection

Motor over temperature protection shall be provided in the end use application.

■ Field Wiring Terminals

All input and output field wiring terminals not located within the motor circuit shall be marked to indicate the proper connections that are to be made to each terminal and indicate that copper conductors, rated 75°C are to be used.

■ Inverter Short-Circuit Rating

This inverter has undergone the UL short-circuit test, which certifies that during a short circuit in the power supply the current flow will not rise above value. Please see electrical ratings for maximum voltage and table below for current.

• The MCCB and breaker protection and fuse ratings (refer to the preceding table) shall be equal to or greater than the short-circuit tolerance of the power supply being used.
• Suitable for use on a circuit capable of delivering not more than (A) RMS symmetrical amperes for (HP) HP in 240 / 480 V class drives motor overload protection.

Horse Power (HP)	Current (A)	Voltage (V)
1 - 50	5,000	240 / 480
51 - 200	10,000	240 / 480
201 - 400	18,000	240 / 480
401 - 600	30,000	240 / 480

❖ Inverter Motor Overload Protection

Set parameter 02-01 (motor rated current) to the appropriate value to enable motor overload protection. The internal motor overload protection is UL listed and in accordance with the NEC and CEC.

■ 02-01 Motor Rated Current

Setting Range Model Dependent
Factory Default: Model Dependent

The motor rated current parameter (02-01) protects the motor. The motor protection parameter 08-05 is set as factory default. Set 02-01 to the full load amps (FLA) as shown on the nameplate of the motor.

■ 08-05 Motor Overload Protection Selection

The inverter has an electronic overload protection function (OL1) based on time, output current, and output frequency, which protects the motor from overheating. The electronic thermal overload function is UL-recognized, so it does not require an external thermal overload relay for single motor operation.
This parameter selects the motor overload curve used according to the type of motor applied.

08-05	Selection for motor overload protection (OL1)
Range	**0:** Disabled **1:** Enabled

Sets motor overload protection function in parameter 08-05 according to the applicable motor.

08-05 = 0: Disables the motor overload protection function when two or more motors are connected to a single inverter. Use an alternative method to provide separate overload protection for each motor such as connecting a thermal overload relay to 1he power line of each motor.

08-05 = 1: The motor overload protection function should be set to hot start protection characteristic curve when the power supply is turned on and off frequently, because the thermal values are reset each time when the power is turned off.

■ 08-06 Motor Overload Operation Selection

08-06	Start-up mode of overload protection operation (OL1)
Range	**0:** Coast-to-Stop After Overload Protection is Activated **1:** Drive Will Not Trip when Overload Protection is Activated (OL1)

08-06=0: When the inverter detects a motor overload the inverter output is turned off and the OL1 fault message will flash on the keypad. Press RESET button on the keypad or activate the reset function through the multi-function inputs to reset the OL1 fault.

08-06=1: When the inverter detects a motor overload the inverter will continue running and the OL1 alarm message will flash on the keypad until the motor current falls within the normal operating range.

■ 08-11 Motor Type Selection

08-11	Start-up mode of overload protection operation (OL1)
Range	**0:** Standard Motor **1:** Inverter Duty Motor

08-11=0: For motors with forced cooling
08-12=1: For motors without forced cooling

■ 08-12 Motor Overload Protection Curve

08-12	Start-up mode of overload protection operation (OL1)
Range	**0:** Motor Overload Protection for General loads (OL=103 %) (150% for 1 Minute) **1:** Motor Over load Protection for HVAC (Fan & Pump) (OL=113%) (123% for 1 Minute)

08-12=0: For constant torque applications with a load less than 103% of the motor rated current. If the load is greater than 150% of the motor rated current, the motor will run for 1 minute before faulting on motor overload.

08-12=1: For variable torque applications (Fan, Pumps…) with a load less than 113% of the motor rated current. If the load is greater than 123% of the motor rated current, the motor will run for 1 minute before faulting on motor overload.

TECO Westinghouse

INVERTER

E510

Distributor

Teco-Westinghouse Motor Company
5100 N. IH-35
Round Rock, Texas 78681
1-800-279-4007
www.tecowestinghouse.com

Ver 01: 2015.08