A3123069

COM-KNOBS 23, without recess

Suitable for rotary potentiometer with round shaft ends according to DIN 41591. Collet system for convenient knob assembly from the front. Borehole without chamfer.
Max. torque: assembly = 1.2 Nm, function = 1.0 Nm.

Supply
1 COM-KNOB (without recess)



TECHNICAL DATA

Material	PA 6	Diameter	23 mm
Colour	nero	Height	16 mm
Standards	RoHS compliant, REACH compliant	Bore hole	6 mm

Please take the dimensions from current parts. These are subject to material- and manufacturing-specific tolerances.

PURCHASING DATA

Weight/1 part	8 g
Customs tariff number (OKW product)	84879090
Country of manufacture	Germany

CUSTOMISING OPTIONS

What else do you need to create your own personal product? We can supply our enclosures and tuning knobs fully modified to suit your electronic components and design requirements. Please advise for anything else we can do for you.

A3123069

COM-KNOBS 23, without recess

Customising options for A3123069



Machining



Printing



Laser marking



Installation / Assembly of accessories

A3123069

COM-KNOBS 23, without recess

SYSTEM COMPONENTS TO COMPLETE



A3223003
Cover 23
PA 6
coral



A3223004
Cover 23
PA 6
beach



A3223005
Cover 23
PA 6
lagoon



A3223006
Cover 23
PA 6
sky



A3223007
Cover 23
PA 6
mineral



A3223009
Cover 23
PA 6
nero



A3223011
Cover 23
ABS (UL 94 HB)
matt chromed

ACCESSORY "SCREWS"



A6207009
Round nut M7 x 0.75



A6210009
Round nut M10 x 0.75



A6295009
Round nut 3/8"-32G



A6300000
Spanner

ACCESSORY



A4423020
Dial 23
PC (UL 94 HB)
transparent



A4423039
Dial 23
PC (UL 94 HB)
transparent



A4423060
Dial 23
PC (UL 94 HB)
transparent



A6023019
Stator 23
Aluminium

A3123069

COM-KNOBS 23, without recess



A7323010
Disk 23, with line
ABS (UL 94 HB)
black RAL 9005

Subject to technical modification without notice. © by OKW Gehäusesysteme, Buchen/Germany.

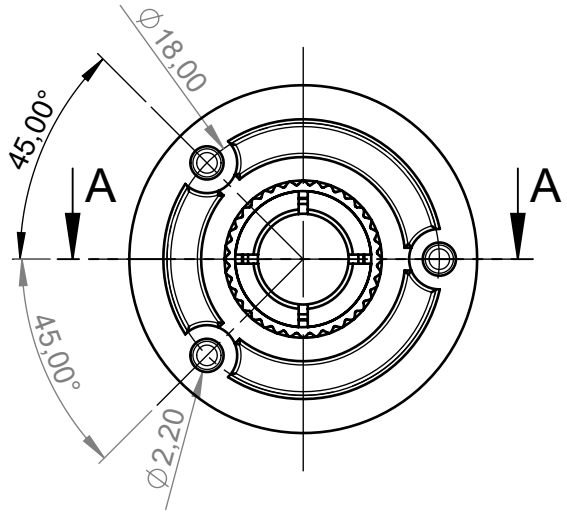

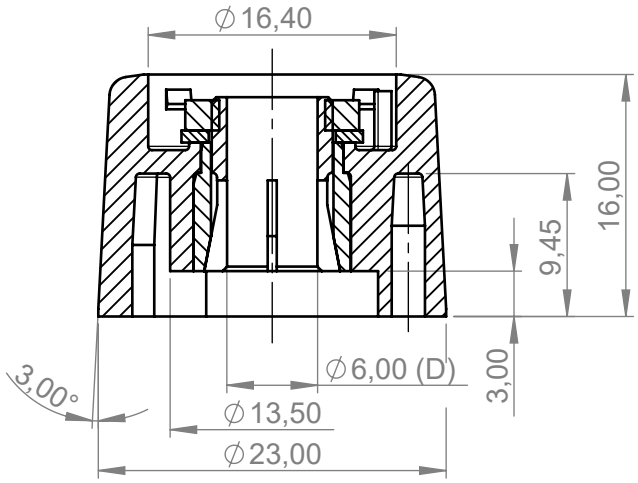

A-A

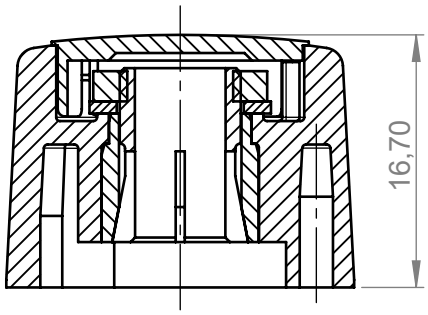

A-A



M 1:1

Bitte die Maße an aktuellen Teilen abnehmen.
Diese unterliegen material und produktionsspezifischen Fertigungstoleranzen

Please take the dimensions from current parts.
These are subject to material- and manufacutring-specific tolerances

Informationskopie
wird nicht aktualisiert
Copy for Information
will not be updated

Erst. am:	13.07.2012	Toleranzen:	Status:	
Erst. von:	D. Hasselbach	DIN 16901 T130	SERIENFREIGABE	
Freig. am:	20.09.2013	Volumen:	Zeichnungsart:	DIN 6 Teil 2
Freig. von:	D. Hasselbach		KUNDE	
Revision:	05			

This document contains proprietary information of OKW Gehäusesysteme GmbH and is tendered subject to the conditions that the information be retained in confidence not be reproduced or copied and not be used or incorporated in any product.

Technische Änderungen vorbehalten. Irrtümer oder Druckfehler begründen keinen Anspruch auf Schadenersatz. Wichtige Einbaumaße bitte direkt mit dem aktuellen Produkt abstimmen.

Subject to technical modification without prior notice. Typographical and other errors do not justify any claim for damages. All dimensions should be verified using an actual moulded part.

Sous reserve de modifications techniques. Toute erreur ou faute d'impression ne justife aucune demande d'indemnisation. Nous prions les clients de verifer les dimensions des composants avec les boitiers avant le montage.

OKW GEHÄUSE SYSTEME

COM-KNOBS 23
Borehole ø6 mm, without chamfer

A312306*

M 2:1

Für dieses Dokument behalten wir uns alle Urheberrechte vor. Es darf auch auszugsweise weder vervielfältigt noch Dritten in irgendeiner Form zugänglich gemacht werden.

Dateiname: 00010531