INSTRUCTION MANUAL

A131 High Level Audible Warning System



1) Introduction

The A131 high level audible warning system is an effective wide area warning alarm system and can be used where there is a requirement to attract attention over large areas and also where potential high levels of background noise exist.

The system comprises of a central control unit which is configured to drive between one and four synchronized audible horns.
The control unit produces forty five different alarm sounds (tones) that are selectable using an internal dipswitch (see tone table page 3 for available tones) including a stage 2 and stage 3 alarm option.

Each audible horn is capable of producing a range of loud warning signals with output levels at one meter of approximately 131dB(A) depending on tone selected.

Both the control unit and horns are suitable to mount either indoors or outdoors in a number of mounting configurations with ingress protection to IP66.

2) Operating and Marking

All units have the following operating requirements and limitations.

Audible Horn Units
Unit Type No.: A131
Operating Temp: -20 to +55°C
IP Rating: IP66
Weight: 4.7kg per horn

Control Panel
Unit Type No. A131xxxxxGx (dependent on variant chosen see table 1)
Input Voltage:
24V DC (18V to 30V DC range)
115 or 230VAC (90V to 264V AC range)
Operating Temp: -20 to +55°C
IP Rating: IP66
Weight: 1.5kg single AC unit
2.9kg four way AC unit

Marking: CE

3) Installation Requirements

Always de-energize control unit before removing cover.
The installation of the units must be in accordance with any local codes that may apply and should only be carried out by a competent electrical engineer who has the necessary training.

3) Power Supply Selection

It is important that a suitable power supply is run the control unit. The power supply selected must have the necessary capacity to provide the input current to the control unit.

The following table shows the input current taken by the various control unit configurations units:-

DC Unit Type No. Horns	Input Voltage	Input Current	Range. I/P Volts
A131DC24G1			18-30V DC
1 Horn Unit	24V DC	3.2A	
A131DC24G2			18-30V DC
2 Horn Units	24V DC	6.5A	
A131DC24G3			18-30V DC
3 Horn Units	24V DC	9.8A	
A131DC24G4			18-30V DC
4 Horn Units	24V DC	13.2A	
AC Unit Type No. Horns	**Input Voltage**	**Input Current**	**Range. I/P Volts**
A131AC230G1			90-264V AC
1 Horn Unit	115V AC	0.78A	
1 Horn Unit	230V AC	0.39A	
A131AC230G2			90-264V AC
2 Horn Units	115V AC	1.60A	
2 Horn Units	230V AC	0.78A	
A131AC230G3			90-264V AC
3 Horn Units	115V AC	3.9A	
3 Horn Units	230V AC	1.5A	
A131AC230G4			90-264V AC
4 Horn Units	115V AC	4.2A	
4 Horn Units	230V AC	1.95A	

Table 1: Control Unit variants and power requirements

Current levels shown above are for the nominal input voltage. The input current will vary according to the voltage input level and the tone selected.
The above table also shows the maximum and minimum voltages at which the control units can be operated.

4) Cable Selection

When selecting the cable size consideration must be given to the input current that the control unit draws (see table above) and the length of the cable run.

5) Earthing

AC powered control units must be connected to a good quality earth. The unit is provided with internal earthing terminal which is located next to the power terminal (See figure 4).

6) Horn Location and Mounting

The location of the horns should be made with due regard to the area over which the warning signal must be audible. The horns should only be fixed to services that can carry the weight of the unit.

The horns should be securely bolted to a suitable surface using the 7mm diameter bolt holes in the stainless steel U shaped mounting bracket (see figure 1). The angle can then be adjusted in the direction that the sound is primarily required to cover. This can be achieved by loosening the two large bracket screws in the side of the unit, which allow adjustment in steps of 18°. On completion of the installation the two large bracket adjustment screws on the side of the unit must be fully tightened to ensure that the unit cannot move in service.

7) Control Unit Location and Mounting

The location of the control unit will depend on the level of customer accessibility required. The control unit should only be fixed to services that can carry the weight of the unit.
The control unit is mounted using 4 off suitable screws in the mounting positions given on installation figures 2 & 3.

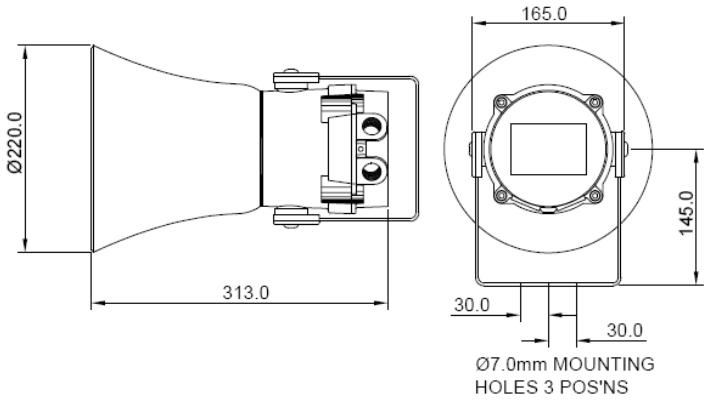

Fig 1 Horn Installation

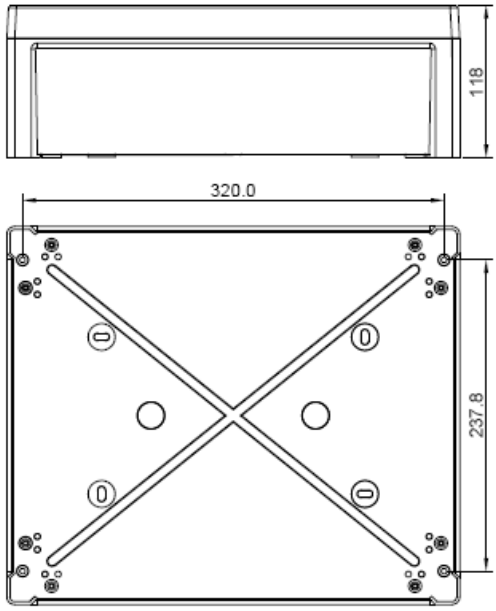

Fig 2 Multi-horn Control Unit mounting Installation A131xxxxxG2, G3 & G4

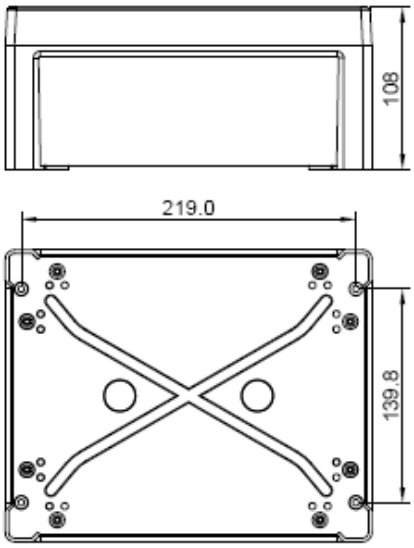

Fig 3 Single Horn Control Unit mounting Installation A131xxxxxG1

8) Wiring of Control Unit to Power and horn units

For wiring schematics see figures 5a, 5b & 5c.
The control unit needs to be wired to a suitable power supply cable supplied by the customer.
The power terminals on the control unit are clearly marked and will accept up to 2.5mm^2 cable. See figure 4.

The cable from the horn unit is feed through the cable gland in the control unit and then wired into the terminal block provided.

To keep horns in-phase ensure that the red horn cable is connected to the brown and the blue to the blue. See figure 4.
As all the sounder units are synchronized it does not matter which unit is cabled into which board.

9) Tone Selection Table

The A131 high level audible warning system has 45 different tones that can be selected for the first stage alarm. The systems can then be switched to sound second and third stage alarm tones. The tones are selected by operation of a DIP switch in the control unit for both DC and AC units. The tone table below shows the switch positions for the 45 tones and which tones are available for The operation of the second and third stages is different for DC and AC units.

the second and third stages. To sound stage one simply connect the supply voltage (+ve and –ve) for DC units and (L, N and E) for AC units, to the supply input terminals in the control unit.

Stage 1	Frequency Description	Switch 1 2 3 4 5 6	Stage 2	Stage 3
Tone 1	340 Hz Continuous	0 0 0 0 0 0	Tone 5	Tone 2
Tone 2	800/1000Hz @ 0.25 sec Alternating	1 0 0 0 0 0	Tone 5	Tone 17
Tone 3	500/1200Hz @ 0.3Hz 0.5 sec Slow Whoop	0 1 0 0 0 0	Tone 5	Tone 2
Tone 4	800/1000Hz @ 1Hz Sweeping	1 1 0 0 0 0	Tone 5	Tone 6
Tone 5	2400Hz Continuous	0 0 1 0 0 0	Tone 20	Tone 3
Tone 6	2400/2900Hz @ 7Hz Sweeping	1 0 1 0 0 0	Tone 5	Tone 7
Tone 7	2400/2900Hz @ 1Hz Sweeping	0 1 1 0 0 0	Tone 5	Tone 10
Tone 8	500/1200/500Hz @ 0.3Hz Sweeping	1 1 1 0 0 0	Tone 5	Tone 2
Tone 9	1200/500Hz @ 1Hz - DIN / PFEER P.T.A.P.	0 0 0 1 0 0	Tone 2	Tone 15
Tone 10	2400/2900Hz @ 2Hz Alternating	1 0 0 1 0 0	Tone 5	Tone 7
Tone 11	1000Hz @ 1Hz Intermittent	0 1 0 1 0 0	Tone 5	Tone 2
Tone 12	800/1000Hz @ 0.875Hz Alternating	1 1 0 1 0 0	Tone 5	Tone 4
Tone 13	2400Hz @ 1Hz Intermittent	0 0 1 1 0 0	Tone 5	Tone 15
Tone 14	800Hz 0.25sec on, 1 sec off Intermittent	1 0 1 1 0 0	Tone 5	Tone 4
Tone 15	800Hz Continuous	0 1 1 1 0 0	Tone 5	Tone 2
Tone 16	660Hz 150mS on, 150mS off	1 1 1 1 0 0	Tone 5	Tone 18
Tone 17	544Hz (100mS)/440Hz (400mS) - NF S 32-001	0 0 0 0 1 0	Tone 27	Tone 2
Tone 18	660Hz 1.8sec on, 1.8sec off Intermittent	1 0 0 0 1 0	Tone 5	Tone 2
Tone 19	1.4KHz-1.6KHz 1s, 1.6KHz-1.4KHz 0.5s - NFC48-265	0 1 0 0 1 0	Tone 5	Tone 2
Tone 20	660Hz Continuous	1 1 0 0 1 0	Tone 5	Tone 2
Tone 21	554Hz/440Hz @ 1Hz Alternating	0 0 1 0 1 0	Tone 5	Tone 2
Tone 22	544Hz @ 0.875 sec. Intermittent	1 0 1 0 1 0	Tone 5	Tone 2
Tone 23	800Hz @ 2Hz Intermittent	0 1 1 0 1 0	Tone 5	Tone 6
Tone 24	800/1000Hz @ 50Hz Sweeping	1 1 1 0 1 0	Tone 5	Tone 29
Tone 25	2400/2900Hz @ 50Hz Sweeping	0 0 0 1 1 0	Tone 5	Tone 29
Tone 26	Bell	1 0 0 1 1 0	Tone 15	Tone 2
Tone 27	554Hz Continuous	0 1 0 1 1 0	Tone 5	Tone 26
Tone 28	440Hz Continuous	1 1 0 1 1 0	Tone 5	Tone 2
Tone 29	800/1000Hz @ 7Hz Sweeping	0 0 1 1 1 0	Tone 5	Tone 7
Tone 30	300Hz Continuous	1 0 1 1 1 0	Tone 5	Tone 2
Tone 31	660/1200Hz @ 1Hz Sweeping	0 1 1 1 1 0	Tone 5	Tone 26
Tone 32	Two tone chime.	1 1 1 1 1 0	Tone 15	Tone 26
Tone 33	745Hz @ 1Hz Intermittent	0 0 0 0 0 1	Tone 5	Tone 2
Tone 34	1000 & 2000Hz @ 0.5 sec Alternating - Singapore	1 0 0 0 0 1	Tone 45	Tone 38
Tone 35	420Hz @ 0.625 sec Australian Alert	0 1 0 0 0 1	Tone 5	Tone 36
Tone 36	500-1200Hz 3.75sec /0.25sec. Australian Evac.	1 1 0 0 0 1	Tone 5	Tone 35
Tone 37	1000Hz Continuous - PFEER Toxic Gas	0 0 1 0 0 1	Tone 45	Tone 9
Tone 38	2000Hz Continuous	1 0 1 0 0 1	Tone 45	Tone 34
Tone 39	800Hz 0.25sec on, 1 sec off Intermittent	0 1 1 0 0 1	Tone 17	Tone 23
Tone 40	544Hz (100mS)/440Hz (400mS) - NF S 32-001	1 1 1 0 0 1	Tone 27	Tone 31
Tone 41	Motor Siren - slow rise to 1200 Hz	0 0 0 1 0 1	Tone 5	Tone 2
Tone 42	Motor Siren - slow rise to 800 Hz	1 0 0 1 0 1	Tone 5	Tone 2
Tone 43	1200 Hz Continuous	0 1 0 1 0 1	Tone 5	Tone 2
Tone 44	Motor Siren - slow rise to 2400 Hz	1 1 0 1 0 1	Tone 5	Tone 2
Tone 45	1KHz 1s on, 1s off Intermittent - PFEER Gen. Alarm	0 0 1 1 0 1	Tone 34	Tone 38

Table 2 : Tone selection table

DC Units Second and Third Stage Tone Selection

The A131 audible alarm system has the facility to use either +ve or –ve switching to change the tone to the second and third stages. For –ve switching connect the two pin headers on the master pcb to the –ve and centre pins (see figures 4 & 5b). For +ve switching connect the pin headers to the +ve and the centre pins (see figure 5c).
To change to the second stage tone, connect either a -ve or +ve supply line to terminal S2 on the master pcb, depending on which switching mode is being used while maintaining the dc supply to the +ve and –ve control unit input terminals. Similarly for the third stage tone, connect a -ve or +ve supply line to terminal S3 on the master pcb. The supply to the S3 terminal will automatically override a supply to the S2 terminal.

AC Units Second and Third Stage Tone Selection

To select the second and third stage tones on the A131 audible alarm system, connect the -ve terminal on the six way terminal block on the master pcb to the S2 terminal for the second stage tone and the S3 terminal for the third stage tone (see figure 5a).

Figure 4 Layout of wiring in control unit

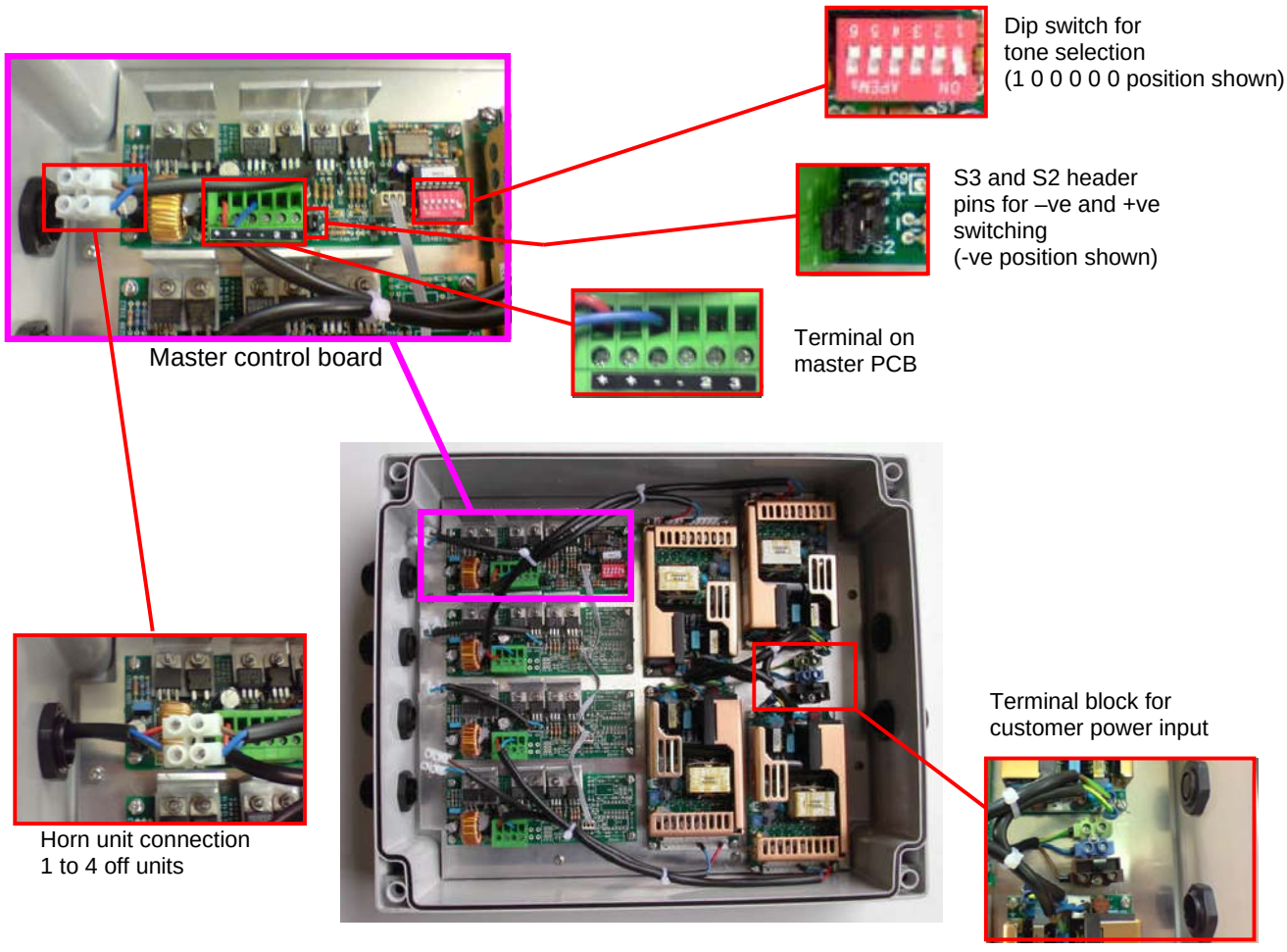

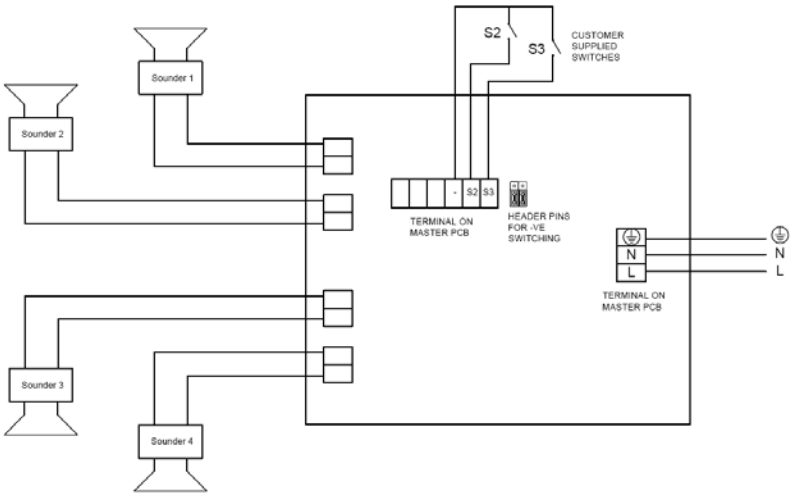

Fig 5a: Schematic Circuit Diagram of AC unit with stages S2 and S3 with negative switching

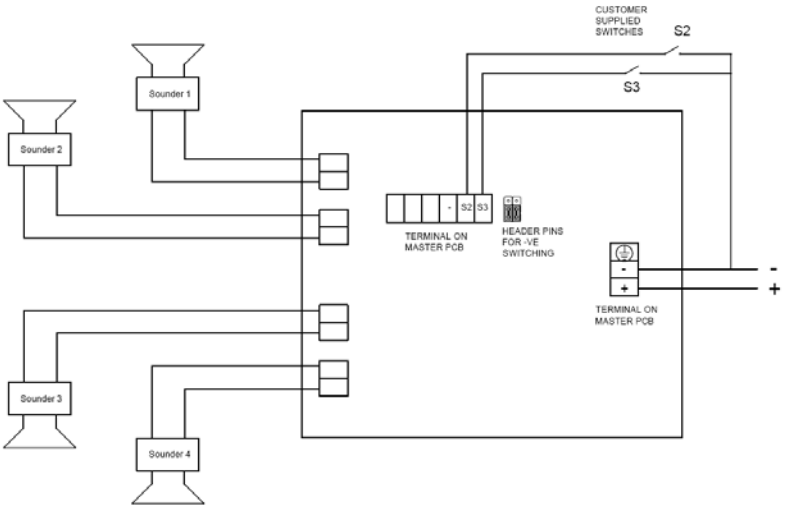

Fig 5b: Schematic Circuit Diagram of DC unit with stages S2 and S3 with negative switching

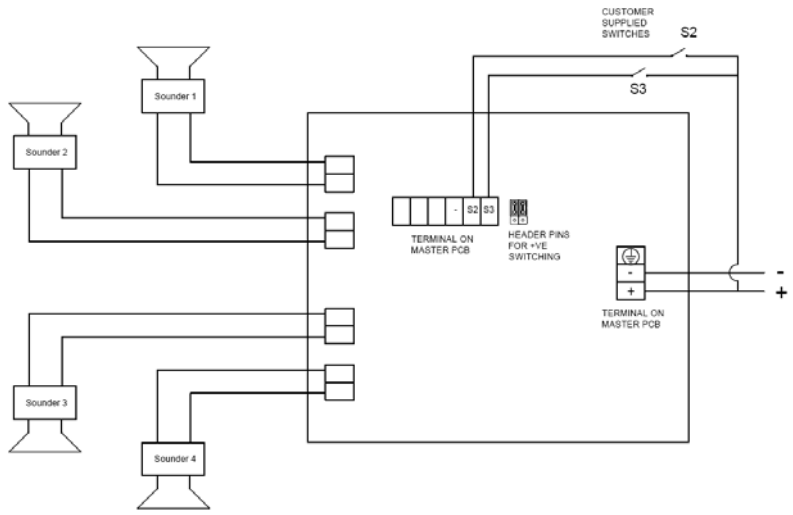

Fig 5c: Schematic Circuit Diagram of DC unit with stages S2 and S3 with positive switching