0 364 45

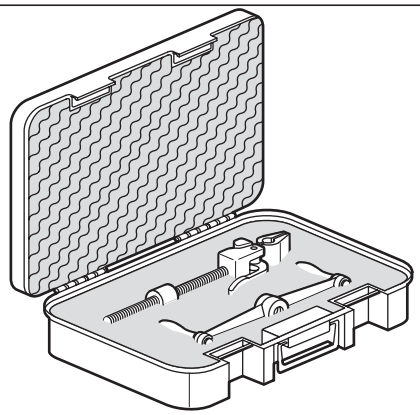

0 364 46 / 47 / 48 / 49

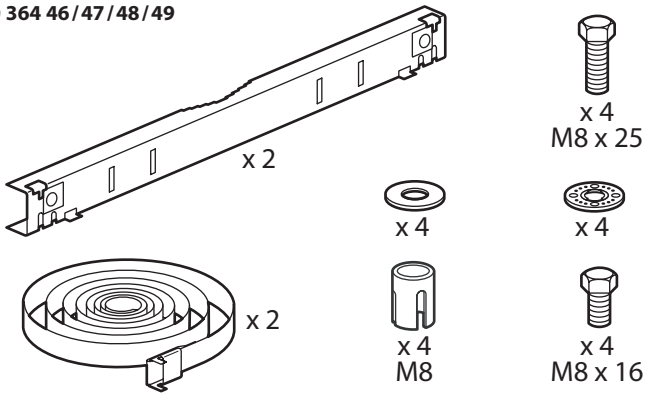

1 **Atlantic™** M8 x 25

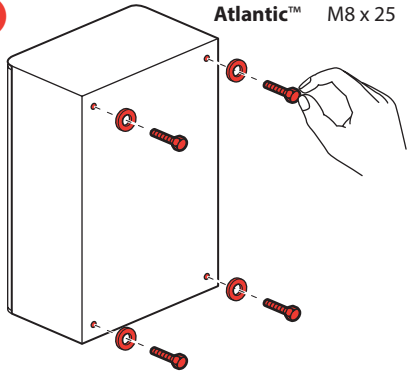

Marina™ M8 x 16

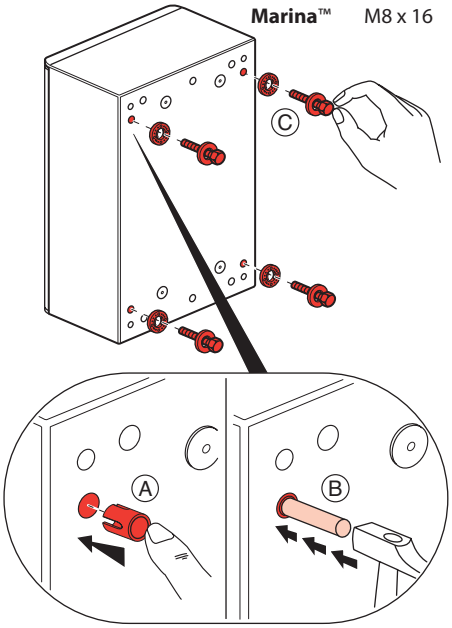

H x L (H, L (mm))	Atlantic™		Marina™	
	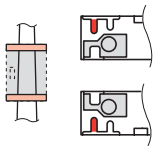	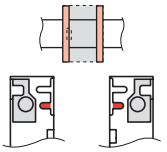	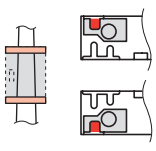	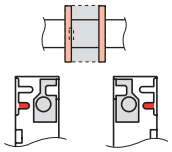
300 x 300	0 364 46	0 364 46	–	–
400 x 300	0 364 46	0 364 47	0 364 46	0 364 47
300 x 400	0 364 47	0 364 46	–	–
400 x 400	0 364 47	0 364 47	–	–
500 x 400	0 364 47	0 364 48	0 364 47	0 364 48
600 x 400	0 364 47	0 364 49	0 364 47	0 364 49
500 x 500	0 364 48	0 364 48	–	–
700 x 500	0 364 48	–	0 364 48	–
400 x 600	0 364 49	0 364 47	–	–
600 x 600	0 364 49	0 364 49	–	–
600 x 800	–	0 364 49	–	–
600 x 1000	–	0 364 49	–	–
800 x 600	0 364 49	–	0 364 49	–
1000 x 600	0 364 49	–	–	–

2

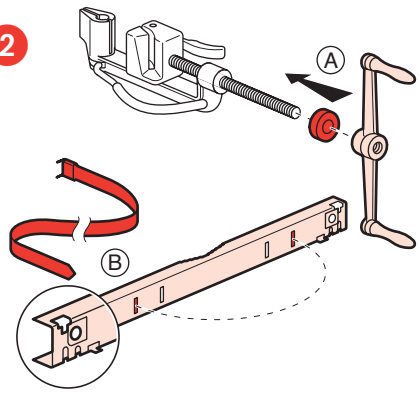

3

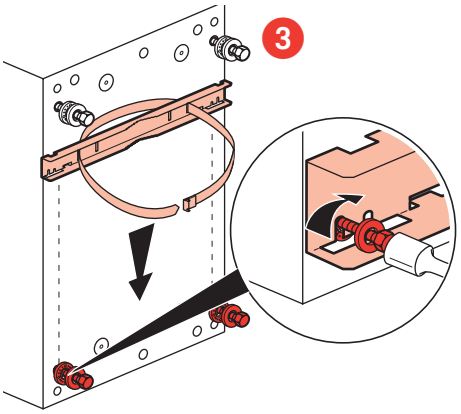

4

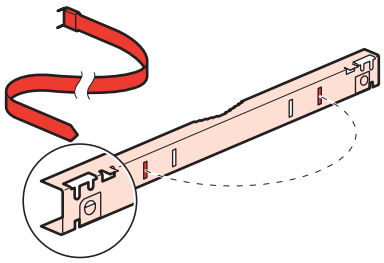

5

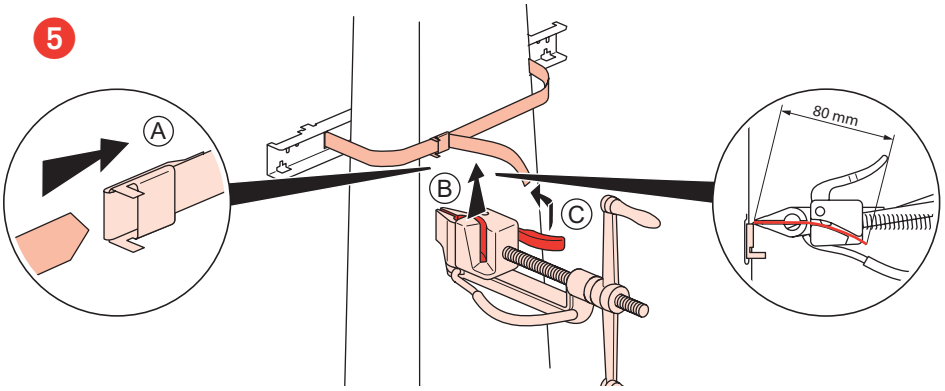

N04107202-C

6

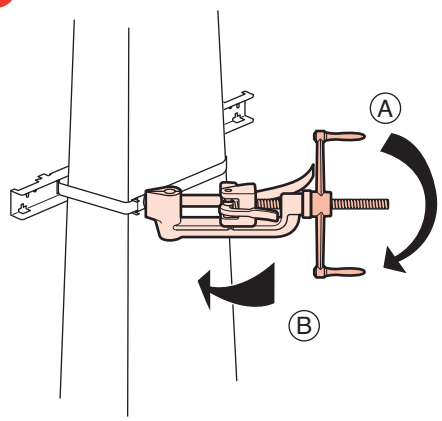

7

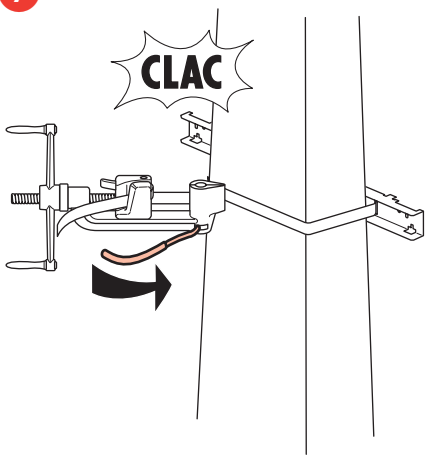

8

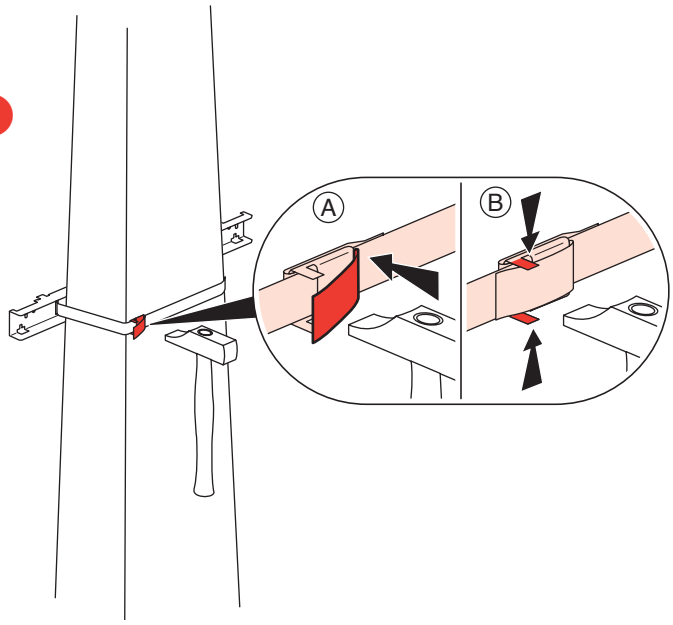

9

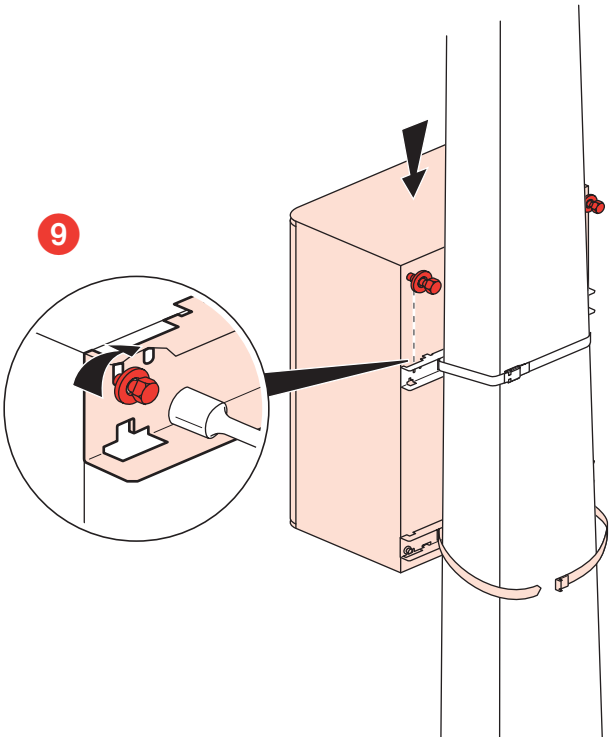

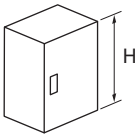	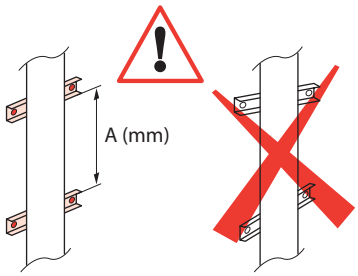	
	A	
H	**Atlantic™**	**Marina™**
300	144,5	–
400	244,5	243,5
500	344,5	336
600	444,5	437,5
700	544,5	541,5
800	645,5	640,5

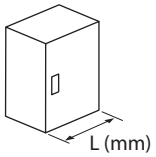	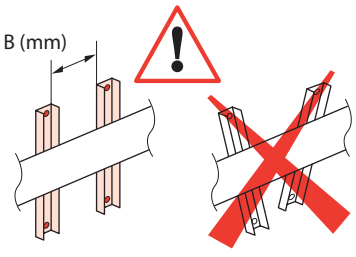	
	B	
L	**Atlantic™**	**Marina™**
300	183	178
400	283	278
500	383	–
600	483	–

N04107202-C

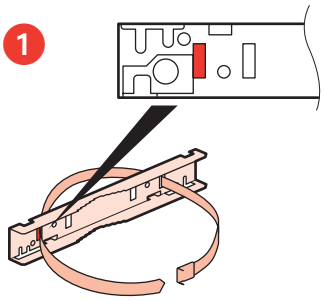

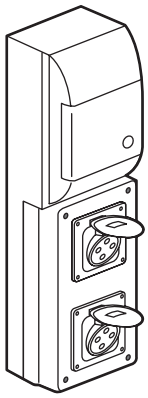

0 577 xx

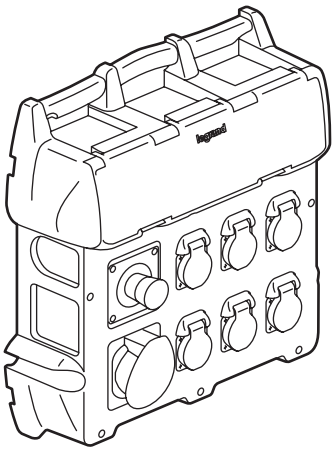

0 589 xx

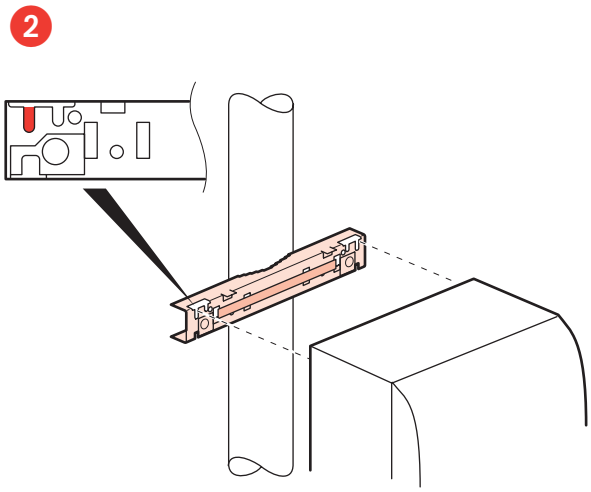

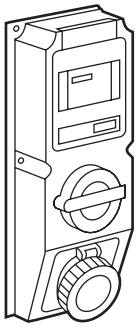

0 598 xx

	0 364 46	0 364 47	0 364 48	0 364 49
0 577 01 / 03 / 05	– – – –	– – – –	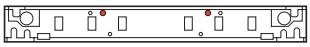	– – – –
0 577 02 / 04 / 06	– – – –	– – – –	– – – –	
0 577 00 / 10 0 577 11 / 20 0 589 33	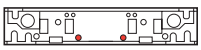	– – – –	– – – –	– – – –
0 589 30 / 31 / 32 0 589 37 / 38	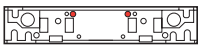	– – – –	– – – –	– – – –
0 589 40 / 41 0 589 42 / 43	– – – –	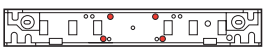	– – – –	– – – –
0 589 50 / 51 / 52 0 589 53 / 54 / 57	– – – –	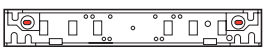	– – – –	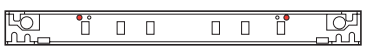
0 598 41	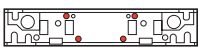	– – – –	– – – –	– – – –
0 598 43	– – – –	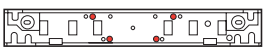	– – – –	– – – –
0 598 46	– – – –	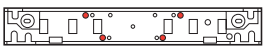	– – – –	– – – –
0 589 22 / 34 0 589 35 / 36 0 598 47 / 48	– – – –	– – – –		– – – –

N04107202-C