E89060

Mounting base

LED-Tower/Base bracket

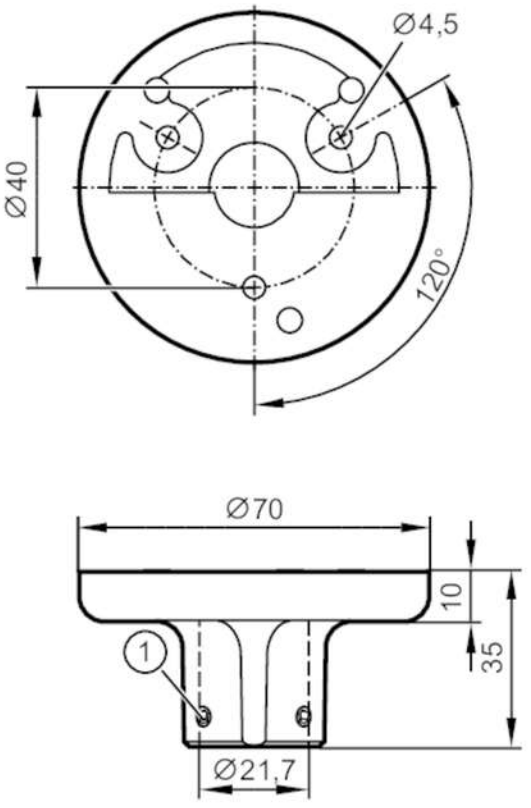

1 bore hole

Mechanical data		
Weight	[g]	141
Dimensions	[mm]	Ø 70 / L = 35
Materials		aluminium black

Accessories	
Accessories (optional)	mounting tube 100 mm, E89065
	mounting tube 300 mm, E89066
	mounting tube 800 mm, E89067

Remarks	
Pack quantity	1 pcs.

E89060

Mounting base

LED-Tower/Base bracket

Diagrams and graphs

base mounting

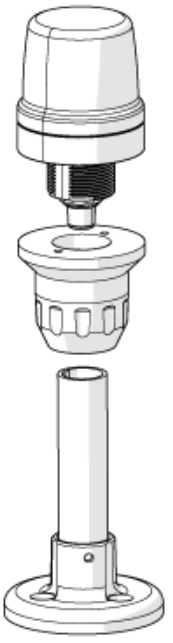

base mounting

