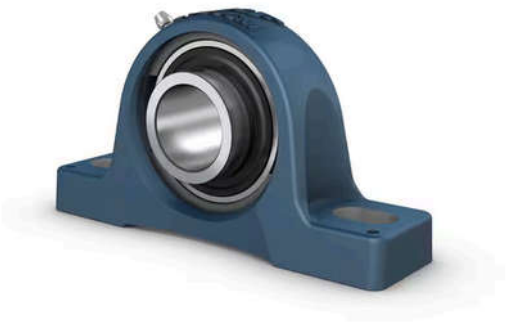

Image may differ from product. See technical specification for details.

SY 1.3/4 TF

Pillow block ball bearing unit with extended inner ring and set screw locking, cast iron, ISO standards

Pillow (plummer) block ball bearing units consist of an insert bearing mounted in a cast iron housing that can be bolted to a support surface. This variant is suitable for applications with both constant and alternating directions of rotation. It has an inner ring extended on

both sides and is locked onto the shaft by tightening a set screw on the inner ring, making it easy to mount.

- Strong
- Ready to mount
- Lubricated and sealed bearing
- Quick locking onto the shaft
- Cost-effective

Overview

Dimensions

Attachment bolt diameter	12.7 mm
Shaft diameter	44.45 mm
Centre height (pillow block)	54 mm
Housing overall width	48 mm
Centre distance between bolt holes	143.5 mm
Bearing width, total	49.2 mm

Performance

Basic dynamic load rating	33.2 kN
Basic static load rating	21.6 kN
Limiting speed	4 300 r/min
Note	Limiting speed with shaft tolerance h6

Properties

Housing type	Pillow block
Number of bolt holes for fasteners	2
Fastening bolt hole type	Plain
Retaining feature, inner ring	Set screws
Bore type	Cylindrical
Rubber seating ring	Without
Material, housing	Cast iron
Material, bearing	Bearing steel
Coating	Without
Sealing, bearing	Seal and flinger on both sides
Sealing type	Contact, standard
Sealing, unit	Optional end cover
Lubricant	Grease
Relubrication hole	With
Grease fitting	With

Logistics

Product net weight	2.11 kg
eClass code	23-05-08-02
UNSPSC code	31171536

Technical specification

Compliance with standard	ISO
Purpose specific	For material handling applications
Material, housing	Cast iron
Sealing, bearing	Seal and flinger on both sides
Sealing type, bearing	Contact, standard
Sealing, unit	Optional end cover
Coating	Without

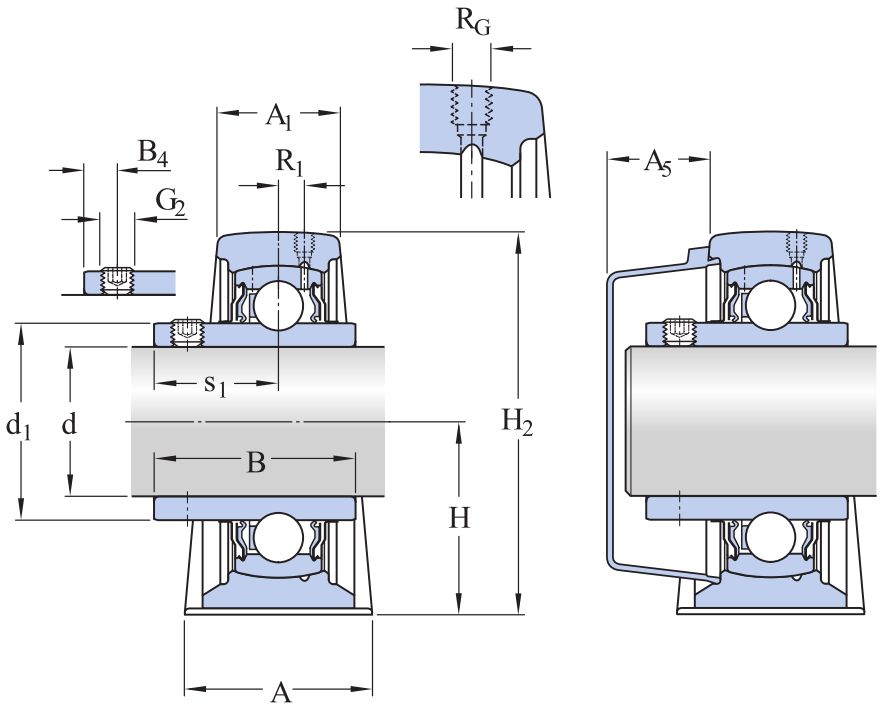

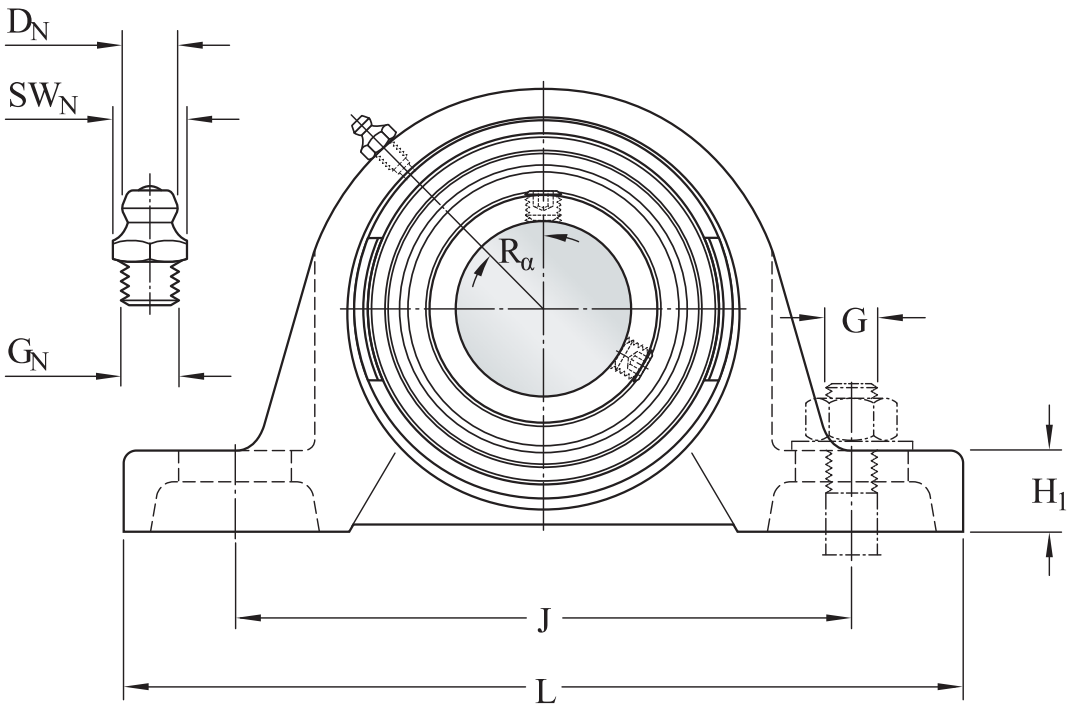

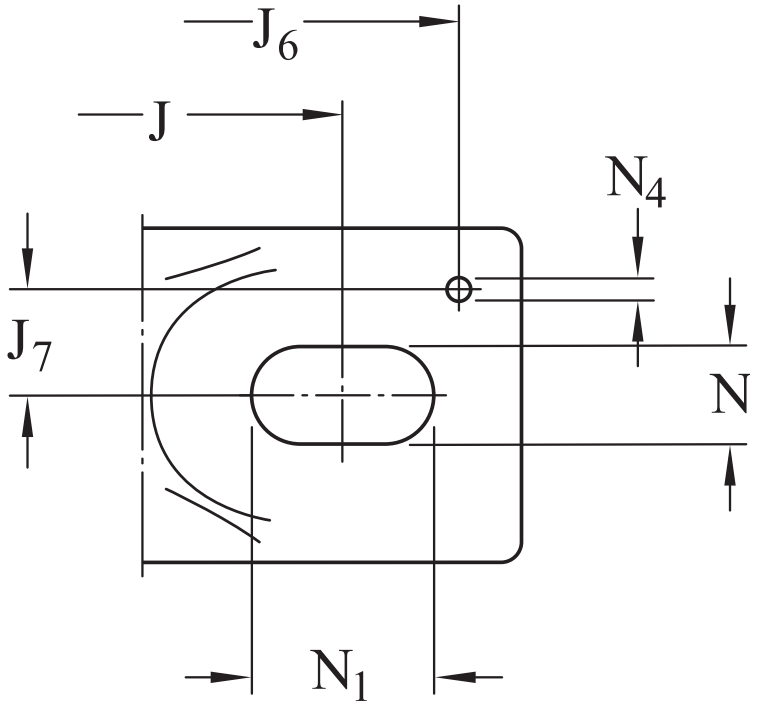

Dimensions

d	44.45 mm	Bore diameter
d_1	≈ 56.8 mm	Shoulder diameter of inner ring
A	48 mm	Base width
A_1	32 mm	Top width

A_5	26.5 mm	Standout of end cover
B	49.2 mm	Width of inner ring
B_4	8 mm	Distance from locking device side face to thread centre
H	54 mm	Height of spherical seat centre
H_1	21 mm	Foot height
H_2	107 mm	Overall height
J	143.5 mm	Distance between attachment bolts
J	max. 152 mm	Maximum distance between attachment bolts
J	min. 135 mm	Minimum distance between attachment bolts
L	187 mm	Overall length
N	14 mm	Diameter of attachment bolt hole
N_1	22.5 mm	Length of attachment bolt hole
s_1	30.2 mm	Distance from locking device side face to raceway centre

GREASE FITTING

D_N	6.5 mm	Diameter of head sphere of grease fitting
SW_N	7 mm	Hexagonal key size for the grease fitting
G_N	1/4-28 SAE-LT	Thread of grease fitting

DOWEL PINS

J_6	173 mm	Distance of dowel pins
J_7	17 mm	Axial offset of dowel pins
N_4	4 mm	Recommended diameter for dowel pins

THREADED HOLE

R_G	1/4-28 UNF	Housing thread for the grease fitting
R_1	4 mm	Axial position of the housing thread

R_α	45 °	Angular position of the housing thread

Calculation data

Basic dynamic load rating	C	33.2 kN
Basic static load rating	C_0	21.6 kN
Fatigue load limit	P_u	0.915 kN
Limiting speed		4 300 r/min
		Limiting speed with shaft tolerance h6

Mounting information

Set screw	G_2	5/16-24 UNF
Hexagonal key size for set screw		3.969 mm
Recommended tightening torque for set screw		6.5 N·m
Recommended diameter for attachment bolts, mm	G	12 mm
Recommended diameter for attachment bolts, inch	G	0.5 in

Tolerances and clearances

The values depend on the included bearing:

- Bore diameter tolerance → table 1
- Radial internal clearance → table 2
- Recommended fit → table 3
- Shaft tolerance → table 4

Compatible products

Component

Pillow block housing for insert bearings, cast iron, ISO standards	SY 509 M
Insert bearing with set screw locking and extended inner ring	YAR 209-112-2F

Recommended product

End cover for bearing units	ECY 209

More Information

Product details

- Pillow block units to ISO standards
- Pillow block units to North American standards
- Pillow block units to Japanese Industrial Standards (JIS)
- Pillow block units, not standardized (incl. SKF Food Line)
- Permissible misalignment
- Locating/non-locating support
- Loads
- Temperature limits
- Permissible speed
- Lubrication
- Mounting and dismounting
- Ordering information
- Designation system

Engineering information

- Principles of ball bearing units selection and application - Download catalogue (4.9 MB)
- Principles of selecting mounted bearing solutions
- Bearing failure and how to prevent it

Tools

- SKF Product select
- Bearing Frequency Calculator

Terms of use

By accessing and using this website / app owned and published by AB SKF (publ.) (556007-3495 · Gothenburg) (“SKF”), you agree to the following terms and conditions:

Warranty Disclaimer and Limitation of Liability

Although every care has been taken to assure the accuracy of the information on this website / app, SKF provides this information "AS IS" and DISCLAIMS ALL WARRANTIES, EXPRESS OR IMPLIED, INCLUDING, BUT NOT LIMITED TO, IMPLIED WARRANTIES OF MERCHANTABILITY AND FITNESS FOR A PARTICULAR PURPOSE. You acknowledge that your use of this website / app is at your sole risk, that you assume full responsibility for all costs associated with use of this website / app, and that SKF shall not be liable for any direct, incidental, consequential, or indirect damages of any kind arising out of your access to, or use of the information or software made available on this website / app.

Any warranties and representations in this website / app for SKF products or services that you purchase or use will be subject to the agreed upon terms and conditions in the contract for such product or service.

Further, for non-SKF websites / apps that are referenced in our website / app or where a hyperlink appears, SKF makes no warranties concerning the accuracy or reliability of the information in these websites / apps and assumes no responsibility for material created or published by third parties contained therein. In addition, SKF does not warrant that this website / app or these other linked websites / apps are free from viruses or other harmful elements.

Third Party Services

When viewing YouTube content via the SKF website(s) (i.e. using YouTube API Services), you agree to be bound by the YouTube Terms of Service.

Copyright

Copyright in this website / app copyright of the information and software made available on this website / app rest with SKF or its licensors. All rights are reserved. All licensed material will reference the licensor that has granted SKF the right to use the material. The information and software made available on this website / app may not be reproduced, duplicated, copied, transferred, distributed, stored, modified, downloaded or otherwise exploited for any commercial use without the prior written approval of SKF. However, it may be reproduced, stored and downloaded for use by individuals without prior written approval of SKF. Under no circumstances may this information or software be supplied to third parties.

This website /app includes certain images used under license from Shutterstock, Inc.

Trademarks and Patents

All trademarks, brand names, and corporate logos displayed on the website / app are the property of SKF or its licensors, and may not be used in any way without prior written approval by SKF. All licensed trademarks published on this website / app reference the licensor that has granted SKF the right to use the trademark. Access to this website / app does not grant to the user any license under any patents owned by or licensed to SKF.

Changes

SKF reserves the right to make changes or additions to this website / app at any time.