VEO

MONITORING RELAY / TEMPERATURE

V2TF01

Art.Nr.: 2100100

V2TF01P

Art.Nr.: 2100110

- Temperature monitoring (PTC)
- Short-circuit monitoring
- Supply voltage 24-240 V AC/DC
- 1 normally open contact
- Width 22,5 mm

Status indication

- LED U: Supply voltage
- LED TFailure: Temperature failure



TECHNICAL DATA

SUPPLY CIRCUIT (=MEASURING CIRCUIT)		
Terminals		A1-A2
Supply voltage		24 ... 240 V AC/DC
Supply voltage tolerance		-15 / +10 %
Rated frequency		16,6 ... 400 Hz or DC
Rated frequency tolerance		16,0 ... 420 Hz
Rated consumption	24 V DC	typ. 0,45 W / 0,55 VA
	230 V AC	typ. 0,5 W / 0,85 VA
Duty-cycle		100 %
Backup power time		< 60 ms
Recovery time		> 100 ms
Drop-out voltage		≥ 5 V

MEASURING CIRCUIT		
Terminals		T1-T2
Measurand		temperature (PTC)
Monitoring functions		overtemperature
Measuring range		-
Switch-off resistance		≥ 3,6 kΩ
Switch-on resistance		≤ 1,6 kΩ
Summing initial resistance		≤ 1,5 kΩ
Short-circuit monitoring		yes
	switch-on re-sistance	≤ 20 Ω

V2TF01
Art.Nr.: 2100100

V2TF01P
Art.Nr.: 2100110

MEASURAND		
Reset		autoreset
No-load voltage	max.	4 V
Sensor current	max.	0,5 mA

TIMING CIRCUIT		
Start-up delay	fixed	approx. 50 ms

STATUS INDICATION		
Supply voltage	LED U (green) on	supply voltage applied
Temperature monitor	LED TFailure (red) on	indication of overtemperature

OUTPUT		
Terminals		13-14
Kind of output		Relay
Number of contacts	normally open contact	1
Contact material		AgNi
Rated voltage (IEC 60947-1)		250V
Maximum switching voltage		400V AC
Minimum switching voltage / switching current		12 V / 10 mA
Rated current (IEC 60947-5-1)	AC-1	8 A / 250 V
	AC-15	1,5 A / 240 V (B300)
	DC-12	8 A / 24 V
	DC-13	0,1 A / 250 V
Endurance	mechanical	30 x 10^6 switching cycles
	electrical (AC-1)	100 x 10^3 switching cycles
Rated frequency of operation	with load	6/min
	without load	1200/min
Fuse rating		8 A fast acting

ACCURACY		
Base accuracy		± 10 %
Temperature influence		< 0,05 % / °C

ENVIRONMENTAL CONDITIONS		
Ambient temperature	operation	-25 ... +60°C
	storage	-40 ... +70°C

V2TF01
Art.Nr.: 2100100

V2TF01P
Art.Nr.: 2100110

ENVIRONMENTAL CONDITIONS

Relative humidity		5 ... 95 %
Vibration	EN 60947-1	2 ... 13,2 Hz: 1 mm; 13,2 ... 100 Hz: 7 m/s²
Shock	EN 60947-1	150 m/s² 11 ms

GENERAL DATA

Dimensions	W × H × D	22,5 x 67 x 76 mm
Mounting		DIN rail (EN60715)
Mounting position		any
Housing material		PA 66, self-extinguishing plastic, class V-0
Degree of protection	housing	IP40
	terminals	IP20
Electrical connection	V2TF01	Screw terminal
Wire size	flexible with wire end ferrule	0,5 ... 2,5 mm² (20 AWG ... 13 AWG)
	flexible without wire end ferrule	0,5 ... 4 mm² (20 AWG ... 12 AWG)
	rigid	0,5 ... 4 mm² (20 AWG ... 12 AWG)
Stripping length		8 mm
Tightening torque		max. 1Nm
Electrical connection	V2TF01P	Push-in terminal
Wire size	flexible with wire end ferrule	0,25 ... 1,5 mm² (24 AWG ... 16 AWG)
	flexible with plastic ferrule	0,25 ... 0,75 mm² (24 AWG ... 19 AWG)
	flexible without wire end ferrule	0,2 ... 1,5 mm² (24 AWG ... 16 AWG)
	rigid	0,2 ... 1,5 mm² (24 AWG ... 16 AWG)
Stripping length		8 mm
MTTF		-
Weight		70 g

ISOLATION DATA

Pollution degree (IEC 60947-5-1)		2
Overvoltage category (IEC 60947-5-1)		III
Rated insulation voltage (IEC 60947-1)	supply circuit / output circuit	300 V
	supply circuit / thermistor circuit	300 V
	thermistor circuit / output circuit	300 V

V2TF01
Art.Nr.: 2100100

V2TF01P
Art.Nr.: 2100110

ISOLATION DATA

Rated impulse withstanding voltage (IEC 60947-1)	supply circuit / output circuit	4 kV
	supply circuit / thermistor circuit	4 kV
	thermistor circuit / output circuit	6 kV
Insulation test voltage (IEC 60947-1)	supply circuit / output circuit	1500 V
	supply circuit / thermistor circuit	1500 V
	thermistor circuit / output circuit	3000 V
Degree of protection	supply circuit / output circuit	basic insulation
	supply circuit / thermistor circuit	basic insulation
	thermistor circuit / output circuit	protective seperation

STANDARDS

Product standard	IEC 60947-5-1
Interference immunity	IEC 61000-6-2
Interference emission	IEC 61000-6-4
Approvals	

FUNCTIONS

Temperature monitoring
If the supply voltage U is applied and the cumulative resistance of the PTC-circuit is less than 3.6kΩ (standard temperature of the motor), the output relay R switches into on-position. When the cumulative resistance of the PTC-circuit exceeds 3.6kΩ, the output relay R switches into off-position. The output relay R switches into on-position again after the cumulative resistance falls below 1.6kΩ.

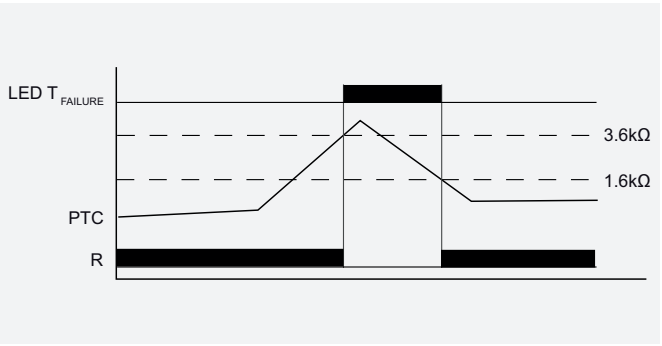

CONNECTIONS

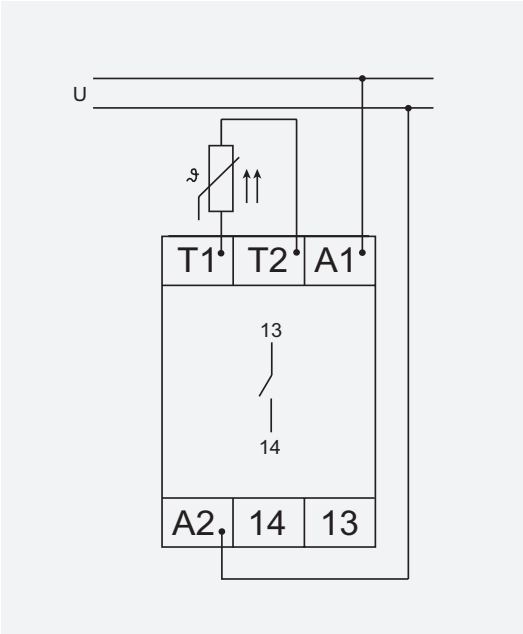

DIMENSIONS

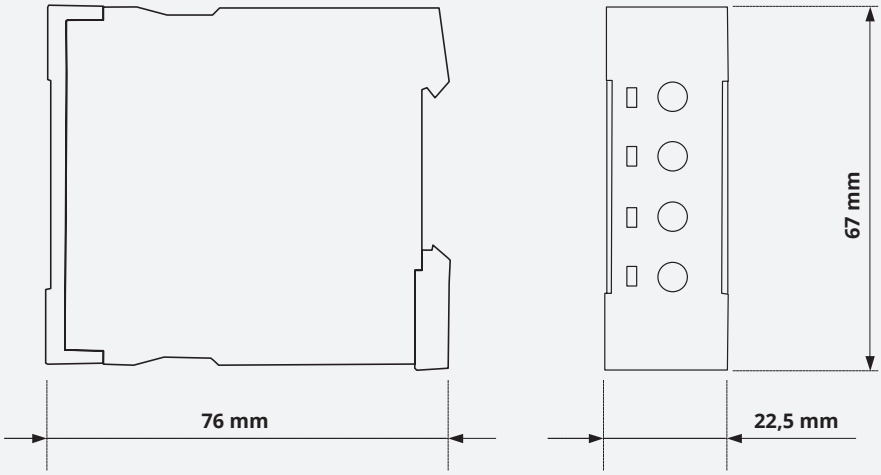

CONTACT

TELE Haase Steuergeräte Ges.m.b.H.

Vorarlberger Allee 38
1230 Vienna
Austria

CALL US +43 / 1 / 614 74 - 0

ONLINE SUPPORT info@tele-online.com