11BGTP0901A02460

REVERSING CONTACTOR ASSEMBLY, AC COIL, BUILT-IN INTERLOCK ONLY WITH REAR PCB SOLDER PINS, 9A AC3 IN AC, 4KW. COIL VOLTAGE 24VAC 60HZ



Product designation			Reversing contactor
Product type designation			BGTP09
Electrical features			
Maximum operating current (≤440V)		A	9
Contact characteristics			
Operational current Ie			
	AC-3 (≤440V ≤55°C)	A	9
Rated operational power AC-3 (T≤55°C)			
	230V	kW	2.2
	400V	kW	4
	415V	kW	4.3
	440V	kW	4.5
	500V	kW	5
Built-in auxiliary contacts			
	NO		0
	NC		1
UL technical data			
Maximum UL/CSA horsepower ratings single-phase			
	110V-120V	HP	0.5
	220V-240V	HP	1.5
Maximum UL/CSA horsepower ratings three-phase, 3-pole			
	200V-208V	HP	2
	220V-240V	HP	3
	440V-480V	HP	5
Mechanical features			
Terminals type			Clamp screw
Weight		g	400

Dimensions

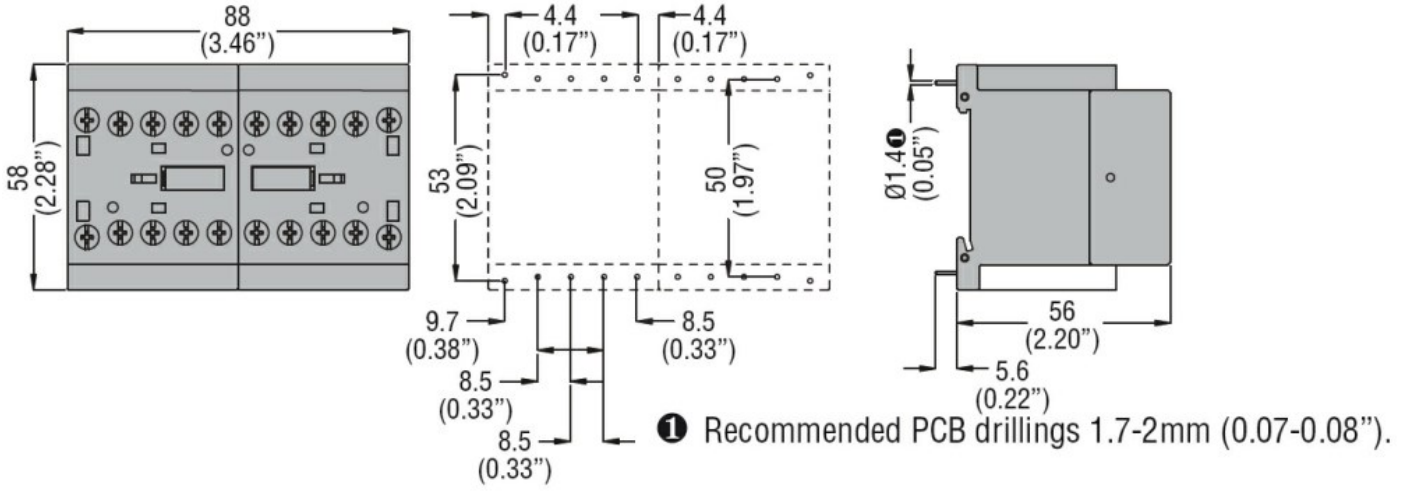

Wiring diagrams

The characteristics described in this document are subject to updates or modifications at any time. The descriptions, technical and functional information, illustrations and instructions in this brochure are purely illustrative, and are consequently not contractually binding

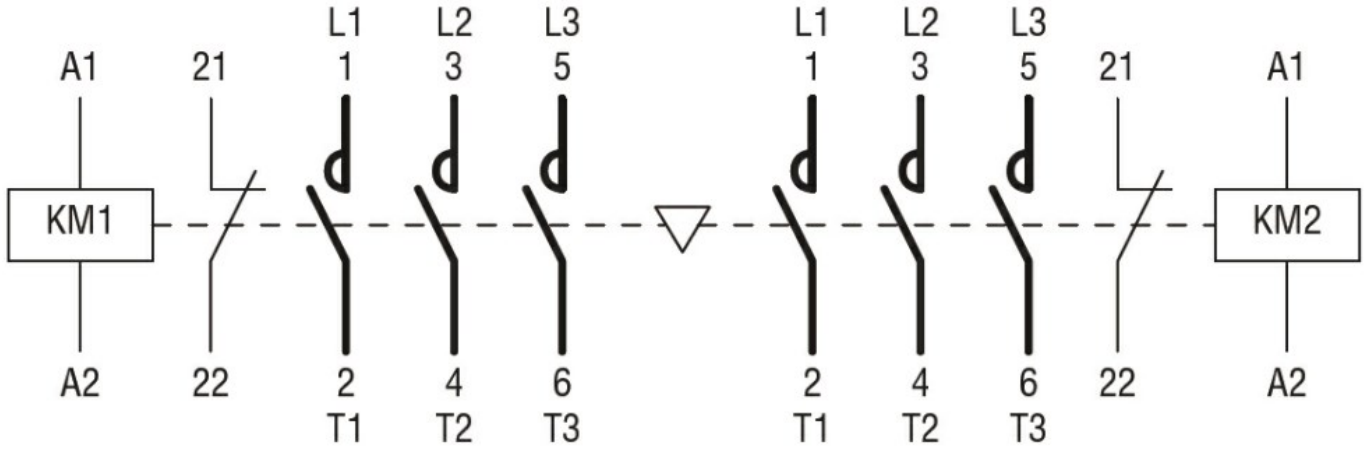

Certifications and compliance

Compliance

	IEC/EN 60947-1
	IEC/EN 60947-4-1
	UL508 CSA C22.2 n° 14

Certificates

	cULus

ETIM classification

ETIM 8.0	EC001037 - Motor starter/Motor starter combination

The characteristics described in this document are subject to updates or modifications at any time. The descriptions, technical and functional information, illustrations and instructions in this brochure are purely illustrative, and are consequently not contractually binding