SCHAEFFLER

Angular contact ball bearings 71812-B-TVH (Series 718..-B)

Main dimensions to DIN 628-1, contact angle α = 40°

The datasheet is only an overview of dimensions and basic load ratings of the selected product. Please always observe all the guidelines in these overview pages. Further information is given on many products under the menu item "Description". You can also order comprehensive information via the Catalogue ordering system (https://www.schaeffler.de/content.schaeffler.de/en/news_media/index.jsp) or by telephone on +49 (91 32) 82 - 28 97.

d	60	mm
D	78	mm
B	10	mm
a	33,9	mm
D_1	70,8	mm
d_1	67,2	mm
$D_{a\ max}$	76	mm
$d_{a\ min}$	62	mm
$D_{b\ max}$	76,6	mm
$r_{1\ min}$	0,2	mm
$r_{a1\ max}$	0,2	mm
$r_{a\ max}$	0,3	mm

r_{min}	0,3 mm	
α	40 °	Contact angle
m	0,11 kg	Mass
C_r	12300 N	Basic dynamic load rating, radial
C_{0r}	12800 N	Basic static load rating, radial
C_{ur}	870 N	Fatigue limit load, radial
n_G	10500 1/min	Limiting speed
$n_{\vartheta r}$	5400 1/min	Reference speed

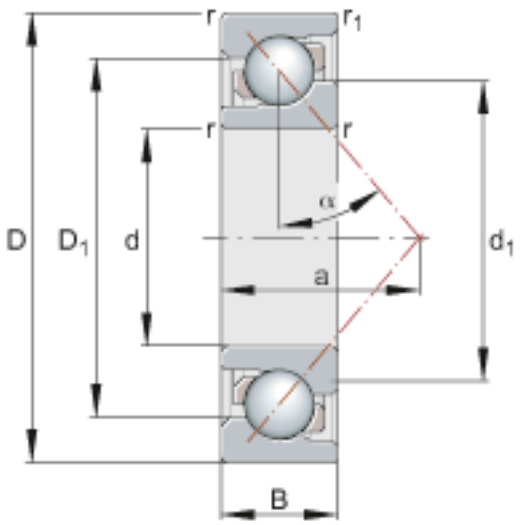

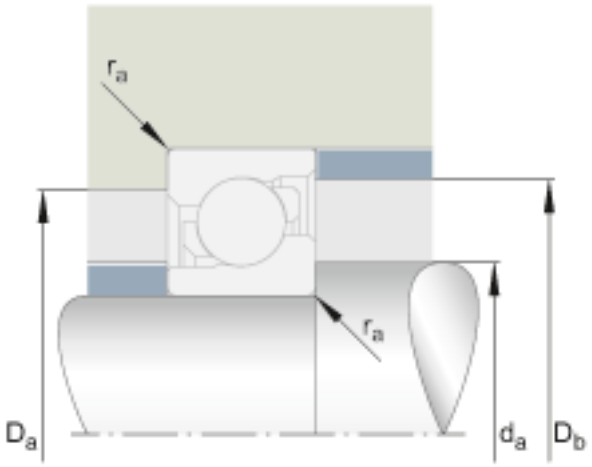
r_a
r_a
D_a
d_a
D_b

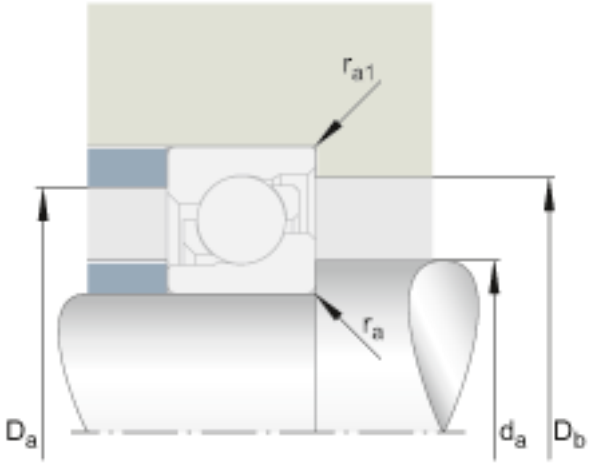
r_{a1}
r_a
D_a
d_a
D_b