MURR ELEKTRONIK
stay connected

MSVD POWER SOCKET VDE

Mounting rail

Germany (VDE) white
Screw terminals

[Link to Product]

Illustration



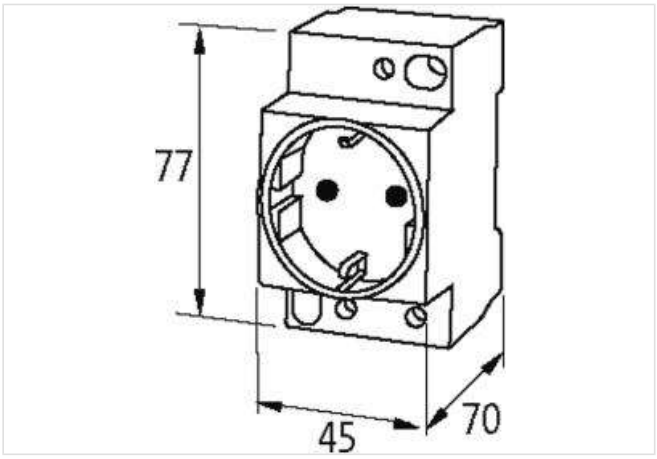

Product may differ from Image

CE

Commercial data

ECLASS-6.0	27189217
ECLASS-6.1	27142305
ECLASS-7.0	27142305
ECLASS-8.0	27142305
ECLASS-9.0	27142305
ECLASS-10.1	27142305
ECLASS-11.1	27142305
ECLASS-12.0	27142305
ETIM-5.0	EC000020
customs tariff number	85366990
GTIN	4048879041447
Packaging unit	1

Mechanical data | Mounting data

Height	77 mm
Width	45 mm
Depth	70 mm

The information in this Product-PDF has been compiled with the utmost care.
Liability for the correctness completeness and topicality of the information is restricted to gross negligence. Version: 2024-01-31