CX Conventional Manual Callpoints

Avertisseurs D'incendie Manuels Adressables
Aufrufbare Manuelle Feuermeldestellen
Addresseerbare Handmeldpunten
Adresserbart Manuell Larmpunkt
Pulsador Manual Direccionable
Avvisatori Di Incendio Manuali Indirizzabili
Διευθυνσιοδοτουμενα Χειροκινητα Μπουτον Αναγγελιας Πυρκαγιας
Konwencjonalne Ręczne
Ostrżegacze Pożarowe

Technical Data

CE 2831	CXL/GP/R/BB	DoP0071*	14	EN54-11:2001+A1:2005 Fire Alarm Device - Manual Callpoint
	CXL/GP/R/WP	DoP0073*	14	EN54-11:2001+A1:2005 Dispositif d'alarme incendie - Avertisseur d'incendie manuel
		DoP0074**	14	EN54-11:2001+A1:2005 Feueralarmgerät – manuelle Feuermeldestelle
	CXM/CO/GP/R/BB	DoP0076*	14	EN54-11:2001+A1:2005 Brandmeldinstallatie - handmeldpunt
	CXM/CO/GP/R/WP	DoP0078*	14	EN54-11:2001+A1:2005 Brandlarmsenhet - Manuell larmpunkt
		DoP0077**	14	EN54-11:2001+A1:2005 Dispositivo de alarma de fuego - Pulsador manual
				EN54-11:2001+A1:2005 Dispositivo di rivelazione incendio - Avvisatore manual
				Ευρωπαϊκό Πρότυπο EN54-11:2001+A1:2005 Συσκευή Συναγερμού Πυρκαγιάς – Χειροκίνητο Μπουτόν Αναγγελίας Ευρωπαϊκό Πρότυπο
				EN54-11:2001+A1:2005 SYSTEMY SYGNALIZACJI POŻAROWEJ - RĘCZNE POŻAROWE

*** Manufactured by Digital Lighting Co. Ltd, China**
**** Manufactured by Eaton Electrical Products Ltd, UK**

	CXL/GP/R	CXM/CO/GP/R	CXL/GP/R/WP	CXM/CO/GP/R/WP
Operating voltage	9 to 30VDC			
Switch Characteristics	470 ohms / 680 ohms	3A SPCO	470 ohms / 680 ohms	3A SPCO
Cable size	FIRETUF, FP200 or MICC 0.28mm² ~ 2.5mm²			
Ambient temperature (min/max)	-10 °C to +55 °C (95%RH)		-25 °C to +70 °C (95%RH)	
Material	ABS V0			
Environmental category (IP rating)	Indoor IP24D*		Outdoor IP66*	

*** Manufacturer's declaration**

CXL/GP/R/BB
CXM/CO/GP/R/BB

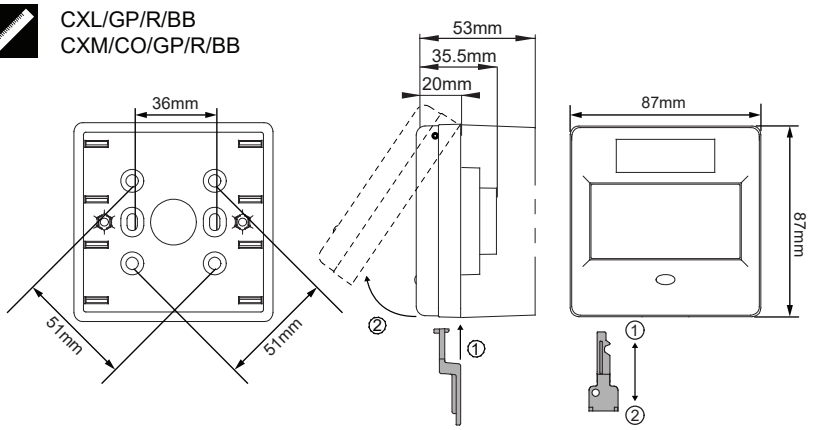

CXL/GP/R/BB
CXM/CO/GP/R/BB

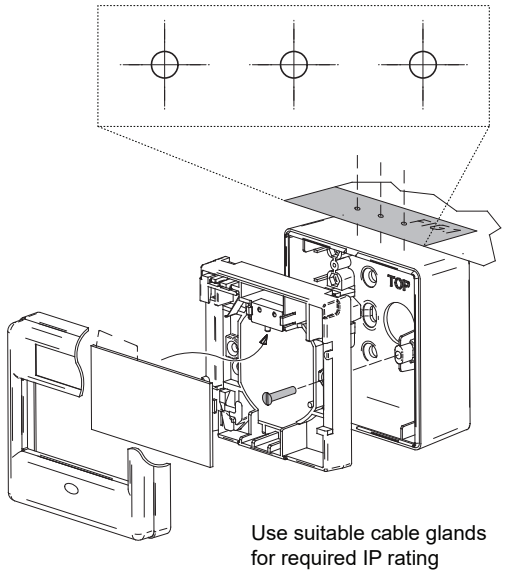

Use suitable cable glands for required IP rating

CXL/GP/R/WP
CXM/CO/GP/R/WP

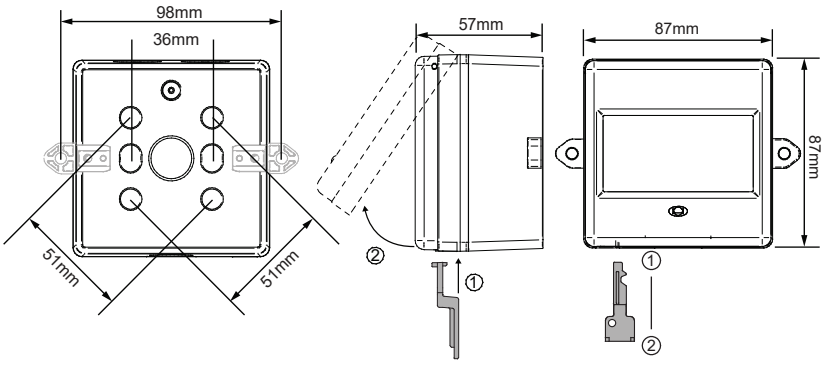

CXL/GP/R/WP
CXM/CO/GP/R/WP

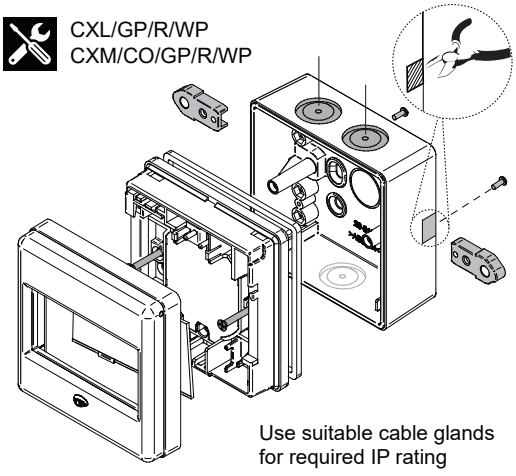

Use suitable cable glands for required IP rating

Powering Business Worldwide

470 ohms / 680 ohms

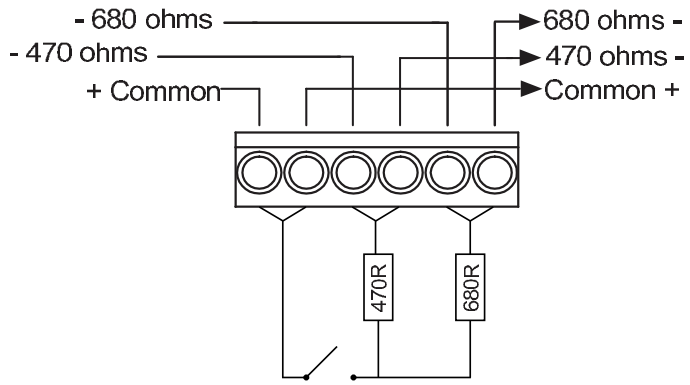

3A SPCO

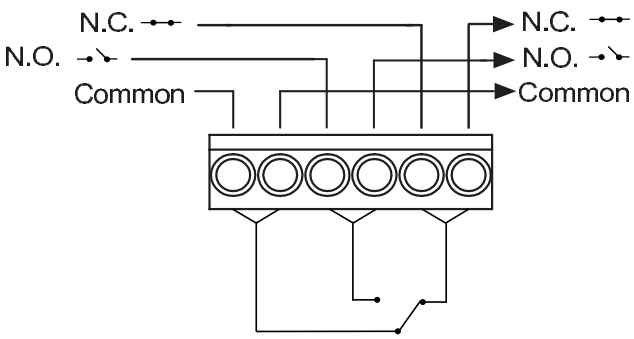

CALLPOINT ACCESSORIES

Accessoires Pour Avertisseurs D'incendie
Feuermeldestellenzubehör
Meldpunt-Accessoires
Akcesoria Do Ręcznych Ostrzegaczy Pożarowych
Tillbehör För Larmpunkter
Accessorios De Los Pulsadores
Accessori Avvisatori Di Incendio
Παρελκομενα Μπουτον Αναγγελιας

SPACER

Entretoise
Distanzstück
Wandmontageplaat
Distans
Espaciador
Distanziatore
Διαχωριστικος Αποστατης
Element Dystansowy

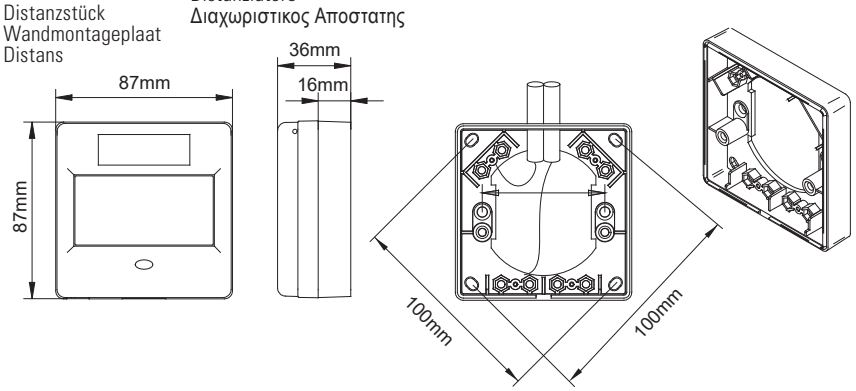

RE-SETTABLE PLASTIC ELEMENT

Élément En Plastique Ré-Encastrable
Rückstellbares Kunststoffelement
Herbruikbaar Plastic Ruitje
Återställbart Plastelement
Elemento Plástico Reemplazable
Elemento In Plastica Regolabile
Επαναφερομενο Πλαστικο Στοιχειο
Plastikowy Element Zamienny

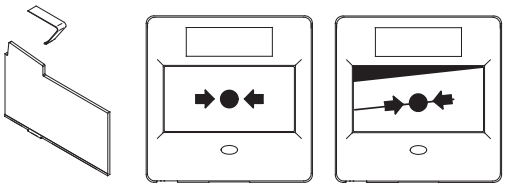

BEZEL

Collerette
Blende
Afgeschuinde Wandmontageplaat
Infattning
Bisel
Cornice
Δακτυλιος Συγκρατησης
Ramka Montażowa

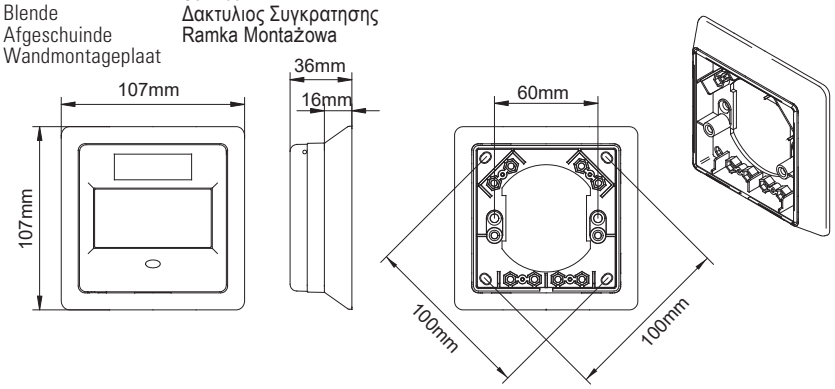

CLEAR HINGED FLAP

Clapet Articulé Transparent
Durchsichtige Klappe Mit Scharnier
Doorzichtige Scharnierende Deksel
Genomskinligt Uppfällbart Lock
Tapa Levantable Transparente
Sportellino Ribaltabile Trasparente
Διαφανες Αρθρωτο Καλυμμα
Pokrywa Ochronna

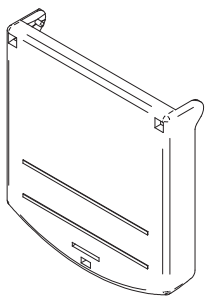

Powering Business Worldwide

Eaton Electrical Products Ltd.
Llantarnam Park
Cwmbran
NP44 3AW
TEL: +44 (0)1633 628500
FAX: +44 (0)1633 876007

Eaton
EMEA Headquarters
Route de la Longeraie 7
1110 Morges, Switzerland
Eaton.eu
TEL: +44 (0) 1302 321541
FAX: +44 (0) 1302 303220
Firesales@eaton.com
Firetechsupport@eaton.com

© 2020 Eaton
All Rights Reserved
Eaton is a registered trademark.

All trademarks are property of their respective owners.
www.eaton.com