# 5.00.888.504/0200

# C-LAB bezel, pushbutton, white

**DISCONTINUED**



### fields of application

- Measurement-control-regulation
- Electrical engineering
- Mechanical and system engineering
- Signalling systems
- Handheld terminals
- Industrial robots
- Model construction

## description

The C-LAB bezels are used for insertion into the LUMOTAST 16 pushbuttons or illuminated pushbuttons. The C-LAB bezels are fixed with the LUMOTAST 16 front rings.

## technical data

| | |
|---|---|
| **general** | |
| Bezel color | white |
| Property of bezel / mushroom | translucent |
| Bezel shape | round |
| Operating temperature, min. | -25 °C |
| Operating temperature, max. | 70 °C |
| Storage temperature, min. | -40 °C |
| Storage temperature, max. | 80 °C |
| Packaging unit | 10 pcs. |
| net weight | 0.1 g |
| MOQ order | 10 pcs. |
| RoHS compliant | Yes |
| REACH compliant | Yes |
| **mounting diameters** | |
| Outside dimension, length | 17.8 mm |
| Outside dimension, width | 17.8 mm |
| Outside dimension, height | 2.3 mm |

### direct links

- RAFI eCatalog

The information in this data sheet only contains general descriptions and / or performance features, which may not apply precisely as described to the respective application, and which my change due to further product enhancements. The technical data, illustrations and other information about our products are the mere results of individual technical testing. These descriptions and other product features are only binding if they expressly agreed upon at the time of the conclusion of a binding contract. In all other cases, we reserve the right to make technical changes as well as changes of availability. Pictures and other graphic illustrations are approximations only. All product names may be trademarks or brand names of the RAFI Group or any other sub-supplier of RAFI. The use of such by any third parties for their own purposes may infringe the rights of the respective entity holding those rights.


**RAFI GmbH & Co. KG**

Ravensburger Str. 128-134
88276 Berg / Ravensburg
Germany
www.rafi-group.com,
info.headquarters@rafi-group.com

## drawings

### Dimensioned drawing

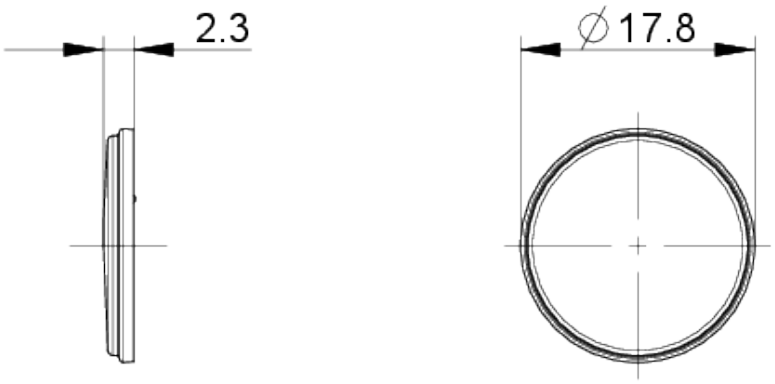


The information in this data sheet only contains general descriptions and / or performance features, which may not apply precisely as described to the respective application, and which my change due to further product enhancements. The technical data, illustrations and other information about our products are the mere results of individual technical testing. These descriptions and other product features are only binding if they expressly agreed upon at the time of the conclusion of a binding contract. In all other cases, we reserve the right to make technical changes as well as changes of availability. Pictures and other graphic illustrations are approximations only. All product names may be trademarks or brand names of the RAFI Group or any other sub-supplier of RAFI. The use of such by any third parties for their own purposes may infringe the rights of the respective entity holding those rights.


**RAFI GmbH & Co. KG**

Ravensburger Str. 128-134
88276 Berg / Ravensburg
Germany
www.rafi-group.com,
info.headquarters@rafi-group.com