IIS242

Inductive sensor

IIB3015BBPKG/2M/PUR

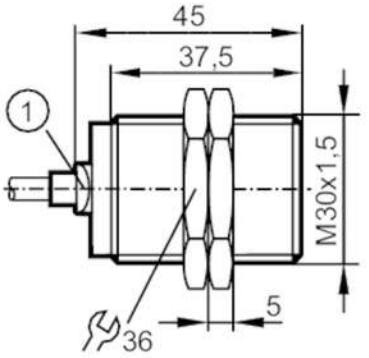

1 LED yellow

Product characteristics		
Electrical design		PNP
Output function		normally open
Sensing range	[mm]	15
Housing		threaded type
Dimensions	[mm]	M30 x 1.5 / L = 45
Application		
Special feature		Increased sensing range
Application		Suitable for industrial, mobile, cooling and lubricating applications; Industrial applications / factory automation
Electrical data		
Operating voltage	[V]	10...30 DC
Current consumption	[mA]	< 10
Protection class		III
Reverse polarity protection		yes
Outputs		
Electrical design		PNP
Output function		normally open
Max. voltage drop switching output DC	[V]	2.5
Permanent current rating of switching output DC	[mA]	100
Switching frequency DC	[Hz]	100
Short-circuit protection		yes
Overload protection		yes
Detection zone		
Sensing range	[mm]	15
Real sensing range Sr	[mm]	15 ± 10 %
Operating distance	[mm]	0...12.15
Increased sensing range		yes

IIS242

Inductive sensor

IIB3015BBPKG/2M/PUR

Accuracy / deviations			
Correction factor		steel: 1 / stainless steel: 0.7 / brass: 0.5 / aluminium: 0.4 / copper: 0.3	
Hysteresis	[% of Sr]	3...15	
Switch point drift	[% of Sr]	-10...10	
Operating conditions			
Ambient temperature	[°C]	-40...85	
Protection		IP 65; IP 66; IP 67; IP 68; IP 69K	
Tests / approvals			
EMC		EN 61000-4-2 ESD	4 kV CD / 8 kV AD
		EN 61000-4-3 HF radiated	10 V/m
		EN 61000-4-4 Burst	2 kV
		EN 61000-4-6 HF conducted	10 V
		EN 55011	class B
Vibration resistance		EN 60068-2-6 Fc	20 g (10...3000 Hz) / 50 sweep cycles, 1 octave per minute, in 3 axes
Shock resistance		EN 60068-2-27 Ea	100 g 11 ms half-sine; 3 shocks each in every direction of the 3 coordinate axes
Continuous shock resistance		EN 60068-2-27	40 g 6 ms; 4000 shocks each in every direction of the 3 coordinate axes
Fast temperature change		EN 60068-2-14 Na	TA = -40 °C; TB = 85 °C; t1 = 30 min; t2 = < 10 s; 50 cycles
Salt spray test		EN 60068-2-52 Kb	severity level 5 (4 test cycles)
MTTF	[years]	861	
Embedded software included		yes	
UL approval		Ta	-25...75 °C
		Enclosure type	Type 1
		power supply	Limited Voltage/Current
		UL Approval no.	A002
		File number UL	E174191
Mechanical data			
Weight	[g]	143	
Housing		threaded type	
Mounting		flush mountable	
Dimensions	[mm]	M30 x 1.5 / L = 45	
Thread designation		M30 x 1.5	
Materials		brass white bronze coated; sensing face: PBT orange; LED window: PEI; lock nuts: brass white bronze coated	
Displays / operating elements			
Display		switching status	1 x LED, yellow
Accessories			
Items supplied		lock nuts: 2	
Remarks			
Pack quantity		1 pcs.	

IIS242

Inductive sensor

IIB3015BBPKG/2M/PUR

Electrical connection

Cable: 2 m, PUR, Ø 4 mm; burning behaviour to ECE R118 rev. 2; 3 x 0.34 mm²

Connection

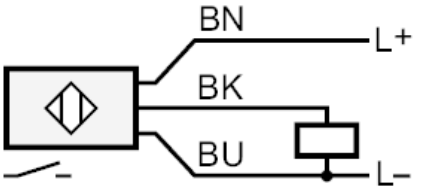

	Core colours :
BK =	black
BN =	brown
BU =	blue