E12464

Wirable socket

SDOGF040MSSFKPG

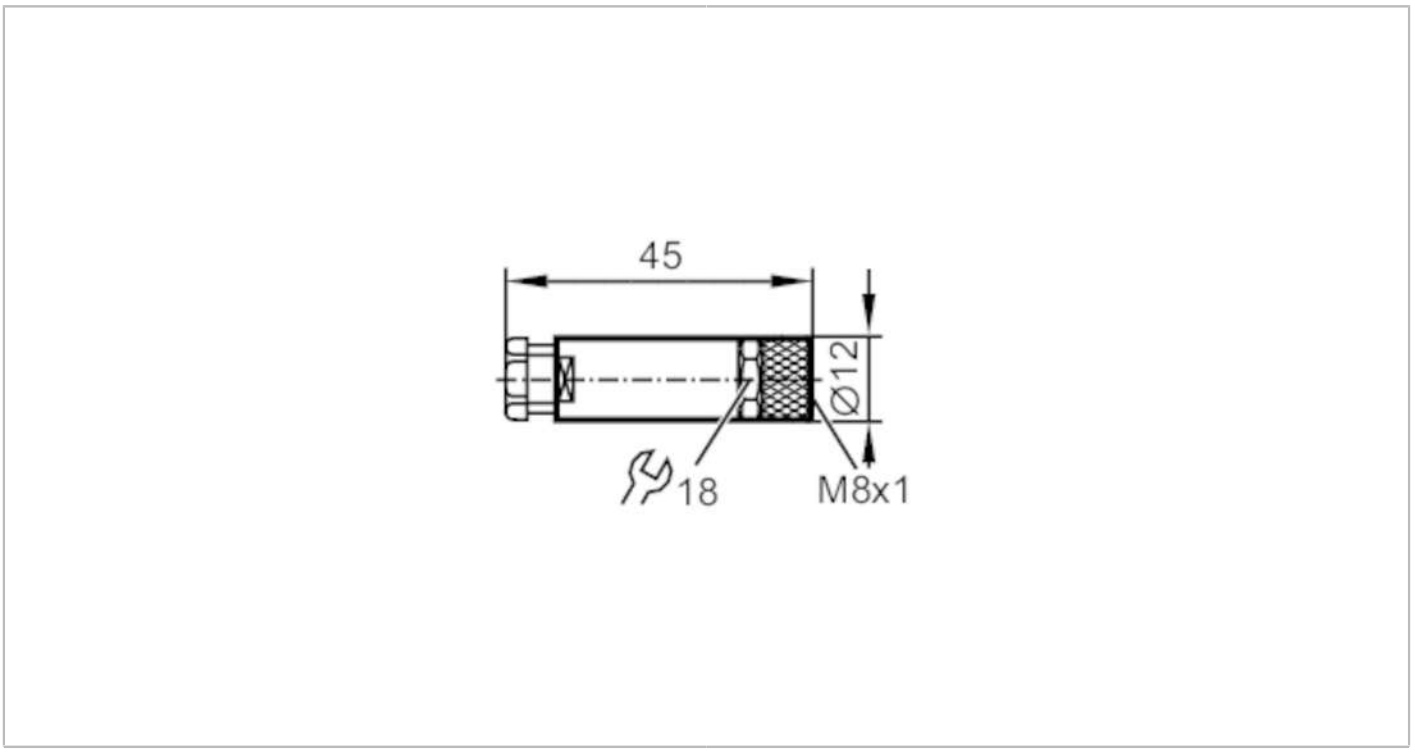

Application		
Special feature		Gold-plated contacts
Electrical data		
Operating voltage	[V]	< 30 AC/DC
Outputs		
Electrical design		PNP
Operating conditions		
Ambient temperature	[°C]	-40...85
Protection		IP 67
Mechanical data		
Weight	[g]	11.2
Dimensions	[mm]	12 x 12 x 45
Materials		PBT; PA
Moulded-body material		PBT / PA
Material nut		brass, nickel-plated
Remarks		
Pack quantity		1 pcs.

Electrical connection

screw terminals: 0.14...0.5 mm²; Cable sheath: Ø 3.5...5 mm

Electrical connection - socket

Connector: 1 x M8, straight; coding: A; Moulded body: PBT / PA; Locking: brass, nickel-plated; Contacts: gold-plated

E12464

Wirable socket

SDOGF040MSSFKPG



Connection

