Product Data Sheet 2CTC432308D0201

# OVR T2 3N 40-275s P TS QS

## 2CTB815704R0800

EAN : 3660308525260
FR : B752526

09/11/2016

| Type |
| --- |
| T2 |
| Imax : 40 kA |
| Up : 1,4 kV |
| System |
| TT/TN-S: 230/400 V |
| IEC 61643-11<br>EN 61643-11 |

Type 2 SPD's are designed to discharge the currents generated by indirect lightning strikes causing induced or conducted overvoltages on the power distribution network.

They are characterized by an 8/20µs waveform (Imax). Higher is the Imax, more powerful they are.
They are installed in the main distribution switchboard but also in sub-distribution board.
They have a low residual voltage Up often compatible with the withstand voltage of the equipment to protect.

Thanks to the patented Safety Reserve system, you can extend the lifespan of the installation plan maintenance to reduce downtime risk.



- Patented QuickSafe ® technology
- Safety Reserve system
- Din rail mounting
- Pluggable
- Improved safety
- Back up protection up to 160 A Fuse or 125 A Mcb

## CHARACTERISTICS

| | | | |
| --- | --- | --- | --- |
| **Key characteristics** | | | |
| Protection mode | | | L-N/L-PE/N-PE |
| Number of protected lines | | | 4 |
| Test class | | | II |
| Integrated thermal disconnector | | | Yes |
| End of life indicator | | | Yes |
| Safety reserve | | | Yes |
| **Electrical characteristics** | | | |
| Nominal discharge current | $I_n$ (8/20) | kA | 20 |
| Maximal discharge current | $I_{max}$ (8/20) | kA | 40 |
| Impulse current | $I_{imp}$ (10/350) | kA | 2 |
| Maximal continuous operating voltage | $U_C$ | V | 275 |
| Maximal continuous operating voltage d.c | $U_{C\,d.c}$ | V | - |
| Type of current / frequency | | Hz | a.c. 47-63 |
| Voltage protection level at In | $U_p$ (L-PE) | kV | 1,5 |
| Voltage protection level at In | $U_p$ (L-N) | kV | 1,4 |
| Voltage protection level at In | $U_p$ (N-PE) | kV | 1,4 |
| Short circuit withstand | $I_{SCCR}$ | kA | 100 |
| Total current | $I_{TOTAL}$ | kA | 80 |
| Follow current interrupted | $I_{fi}$ | kA | - / 0,1 |
| Ground residual current | $I_{PE}$ | µA | <10 |
| TOV withstand (L-N : 5s / N-PE : 200 ms) | $U_T$ | V | 337 / 1200 |
| Voltage Combination Wave | $U_{OC}$ | kV | - |
| **Required thermal/back up protection** | | | |
| Curve B or C Circuit breaker | | A | ≤ 125 |
| gG - gL fuse | | A | ≤ 160 |
| Comments | | | |
| **Mechanical characteristics** | | | |
| Dimensions | H x W x D | mm | 95x71.2x69.4 |
| Wire range : Solid wire | | mm² | 2.5 ... 35 |
| Wire range : Stranded wire | | mm² | 2.5 ... 25 |
| Stripping length | | mm | 12.5 |
| Packing quantities | | piece | Per 1 |
| **Miscellaneous characteristics** | | | |
| Maximal altitude | | m | 2 000 |
| Weight | | g | 600 |
| Response time | | ns | <25 |
| Fire resistance according to UL 94 | | | V-0 |
| Replacement cartridges | | | |
| Phase / Product ID | OVR T2 40-275s C QS | | 2CTB815704R2600 |
| Neutral / Product ID | OVR T2 N 80-275s C QS | | 2CTB815708R2800 |

## INSTALLATION

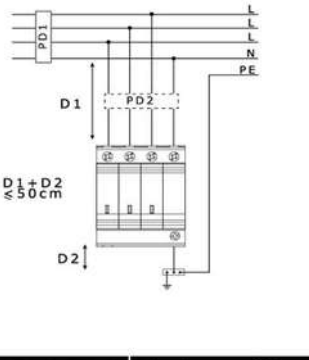


## DIAGRAM

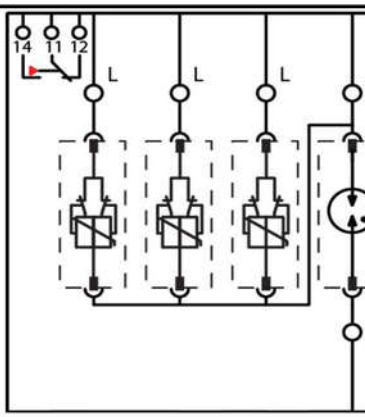





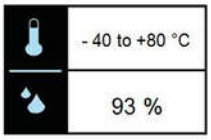


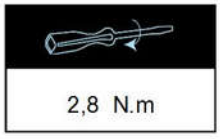


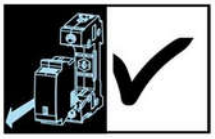

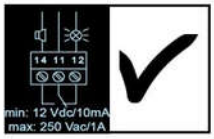


Power and productivity for a better world™