GG507S

Fail-safe inductive sensor

GIGA-4010-US

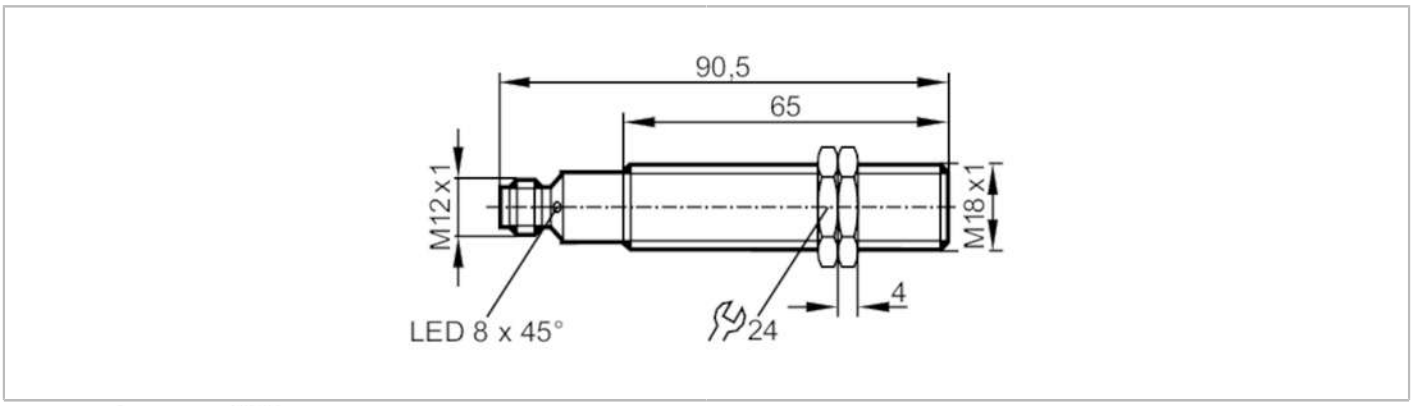

Product characteristics		
Output function		clock signal
Enable zone	[mm]	1...4
Housing		threaded type
Dimensions	[mm]	M18 x 1 / L = 90.5
Application		
Special feature		Gold-plated contacts
Type of operation		continuous operation (maintenance-free)
Safety-related function		safe state when undamped
Application		industrial application
Electrical data		
Operating voltage	[V]	19.2...30 DC
Current consumption	[mA]	< 15
Protection class		III
Reverse polarity protection		yes
Max. power-on delay time	[ms]	5000
Inputs		
Max. input capacitance Ci_max	[nF]	2
Outputs		
Output function		clock signal
Output data		Interface type B
Short-circuit protection		yes
Max. capacitive load CL_max	[nF]	20
Detection zone		
Enable zone	[mm]	1...4
Safe switching-off distance s(ar)	[mm]	10
Response times		
Response time to safety request	[ms]	20

GG507S

Fail-safe inductive sensor

GIGA-4010-US

Response time when approaching the enable zone	[ms]	200; (typical 100)	
Operating conditions			
Applications		class C to EN 60654-1 weatherproof application	
Ambient temperature	[°C]	-25...70	
Note on ambient temperature		operational life ≤ 87600 h	
Ambient temperature	[°C]	10...40	
Note on ambient temperature		operational life ≤ 175200 h	
Rate of temperature change	[K/min]	0.5	
Max. relative air humidity	[%]	briefly: 5...95 %; permanent: 5...70 %	
Air pressure	[kPa]	80...106	
Ionising radiation		not permissible	
Salt spray		no	
Protection		IP 68; IP 69K; (to EN 60529)	
Tests / approvals			
EMC		IEC 60947-5-2	
		IEC 60947-5-3	
		EN 61000-4-2 ESD	6 kV CD / 8 kV AD
		EN 61000-4-3 HF radiated	20 V/m
		EN 61000-4-4 Burst	2 kV
		EN 61000-4-6 HF conducted	10 V
		EN 61000-4-8	30 A/m
		EN 55011	class B
Shock resistance		IEC 60947-5-2	
Vibration resistance		IEC 60947-5-2	
Safety classification			
Complies with the requirements		ISO 13849-1: 2015 category 3, PL e	
		IEC 61508 SIL 3	
Mission time TM	[h]	≤ 175200	
Mission time TM (additional indication)		20 years	
PFH	[1/h]	1E-08	
Mechanical data			
Weight	[g]	191	
Housing		threaded type	
Mounting		flush mountable	
Dimensions	[mm]	M18 x 1 / L = 90.5	
Thread designation		M18 x 1	
Materials		brass special coating; PBT	
Displays / operating elements			
Display		operation	1 x LED, green
		signal	1 x LED, yellow
Accessories			
Items supplied		lock nuts: 2	

GG507S

Fail-safe inductive sensor

GIGA-4010-US

Remarks	
Remarks	Unless stated otherwise, all data refer to the reference target plate to IEC 60947-5-2 over the whole temperature range.
	(FE360 = ST37K) 24x24x1 mm
Pack quantity	1 pcs.

Electrical connection - plug

Connector: 1 x M12; coding: A; Contacts: gold-plated



Connection

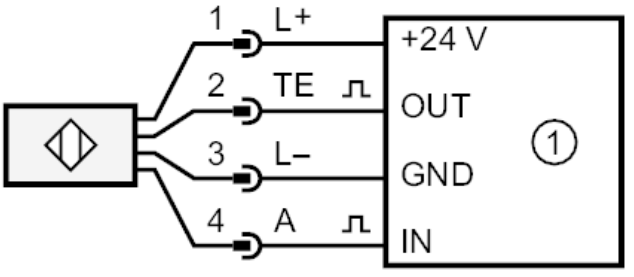

1 = safety-related logic unit