HIRSCHMANN® Test & Measurement
A BRAND OF SKS

SKS Kontakttechnik GmbH

Sockets

4 mm safety system

SEB 2620 F6,3



CE

Product	SEB 2620 F6,3
description	Safety built-in socket, 4 mm diameter, contact-protected, with 6.3 x 0.8 tab connector complying with DIN 46 244, gold-plated brass. For installation into switchpanels and equipment chassis with wall thicknesses up to 6 mm. Installation hole: 12.2 mm diameter, Tightening torque: 50 Ncm, Accessory: assembly tool MW SEB
operating instruction	BA451
article-no. / *colour	9723561xx 00 black · 01 red · 02 blue · 03 yellow · 04 green · 05 brown · 06 gray · 07 white · 09 violet · 88 yellow green Au
drawing	
	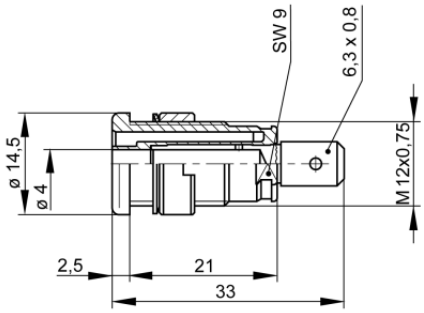
technical data	
connection	flat connector 6.3 x 0.8 mm
rated voltage	AC/DC 1000 V
measurement cat. acc. to IEC 61010	CAT III
rated current (consider derating curve)	32 A
material socket	brass, gold plated
housing material	PA

temperature range acc. To IEC61010[(1)]	-40 °C to +80 °C
inflammability class acc. to UL 94 (only valid for basic material of housing)	V-2

[(1)] contact the manufacturer for applications at deviating temperature ranges
stand: 21.06.2022

stand: 21.06.2022