DATASHEET - NZMN2-ME140-NA



Similar to illustration

Circuit-breaker, 3p, 140A, motor protection

Part no. NZMN2-ME140-NA
Catalog No. 118965

Delivery program

Product range			Circuit-breaker
Protective function			Motor protection
			IE3
Standard/Approval			UL/CSA, IEC
Installation type			Fixed
Release system			Electronic release
Construction size			NZM2
Description			Switches conform to UL/CSA as well as the IEC regulations. IEC switching performance values are contained on the rating plate. 100% rated For use in motor circuits with contactor. Additional motor protective characteristics (calibration) to UL508, CSA-C22.2 No. 14-05. Adjustable overload releases Ir adjustable time delay setting to overcome current peaks tr: 2 – 20 s at 6 x Ir
Number of poles			3 pole
Standard equipment			Screw connection
Rated current = rated uninterrupted current	$I_n = I_u$	A	140
Switching capacity			
SCCR 480Y/277 V 60 Hz	I_{cu}	kA	100
SCCR 480 V 60 Hz	I_{cu}	kA	35
Setting range			
Overload trip			
	I_r	A	70 - 140
Short-circuit releases			
Non-delayed	$I_i = I_n$ x …		2 - 14
Motor power	460 V 480 V	HP	100

Technical data

General

Standards			IEC/EN 60947
Protection against direct contact			Finger and back of hand proof to VDE 0106 Part 100
Climatic proofing			Damp heat, constant, to IEC 60068-2-78 Damp heat, cyclic, to IEC 60068-2-30
Ambient temperature			
Ambient temperature, storage		°C	- 40 - + 70
Operation		°C	-25 - +70
Mechanical shock resistance (10 ms half-sinusoidal shock) according to IEC 60068-2-27		g	20 (half-sinusoidal shock 20 ms)

Safe isolation to EN 61140			
Between auxiliary contacts and main contacts		V AC	500
between the auxiliary contacts		V AC	300
Weight		kg	2.345
Mounting position			
Mounting position			Vertical and 90° in all directions 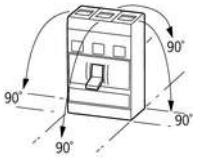 With XFI earth-fault release: - NZM1, N1, NZM2, N2: vertical and 90° in all directions with plug-in unit - NZM1, N1, NZM2, N2: vertical, 90° right/left with withdrawable unit: - NZM3, N3: vertical, 90° right/left - NZM4, N4: vertical with remote operator: - NZM2, N(S)2, NZM3, N(S)3, NZM4, N(S)4: vertical and 90° in all directions
Direction of incoming supply			as required
Degree of protection			
Device			In the operating controls area: IP20 (basic degree of protection)
Enclosures			With insulating surround: IP40 With door coupling rotary handle: IP66
Terminations			Tunnel terminal: IP10 Phase isolator and strip terminal: IP00
Other technical data (sheet catalogue)			Weight Temperature dependency, Derating Effective power loss

Circuit-breakers

Rated surge voltage invariability	U_{imp}		
Main contacts		V	8000
Auxiliary contacts		V	6000
Rated operational voltage	U_e	V AC	690
Overvoltage category/pollution degree			III/3
Rated insulation voltage	U_i	V	1000
Use in unearthed supply systems		V	≦ 690

Switching capacity

Rated short-circuit making capacity	I_{cm}		
240 V	I_{cm}	kA	187
400/415 V	I_{cm}	kA	105
440 V 50/60 Hz	I_{cm}	kA	74
525 V 50/60 Hz	I_{cm}	kA	53
690 V 50/60 H	Ic	kA	40
Rated short-circuit breaking capacity I_{cn}	I_{cn}		
Icu to IEC/EN 60947 test cycle O-t-CO	Icu	kA	
240 V 50/60 Hz	I_{cu}	kA	85
400/415 V 50/60 Hz	I_{cu}	kA	50
440 V 50/60 Hz	I_{cu}	kA	35
525 V 50/60 Hz	I_{cu}	kA	25
690 V 50/60 Hz	I_{cu}	kA	20
Ics to IEC/EN 60947 test cycle O-t-CO-t-CO	Ics	kA	
240 V 50/60 Hz	I_{cs}	kA	85
400/415 V 50/60 Hz	I_{cs}	kA	50
440 V 50/60 Hz	I_{cs}	kA	35
525 V 50/60 Hz	I_{cs}	kA	25
690 V 50/60 Hz	I_{cs}	kA	5
Maximum low-voltage h.b.c. fuse		A gG/gL	355
			Maximum back-up fuse, if the expected short-circuit currents at the installation location exceed the switching capacity of the circuit-breaker.
Technical data that diverge from products for the IEC market Switching capacity of NA switches (UL489, CSA 22.2 No. 5.1)			

Short-circuit current rating SCCR			
SCCR 240 V 60 Hz	I_{cu}	kA	85
SCCR 480Y/277 V 60 Hz	I_{cu}	kA	100
SCCR 480 V 60 Hz	I_{cu}	kA	35
Rated short-time withstand current			
t = 0.3 s	I_{cw}	kA	1.9
t = 1 s	I_{cw}	kA	1.9
Utilization category to IEC/EN 60947-2			A
Lifespan, mechanical(of which max. 50 % trip by shunt/undervoltage release)	Operations		20000
Lifespan, electrical			
AC-1			
400 V 50/60 Hz	Operations		10000
690 V 50/60 Hz	Operations		7500
AC--3			
400 V 50/60 Hz	Operations		6500
415 V 50/60 Hz	Operations		6500
690 V 50/60 Hz	Operations		5000
Max. operating frequency		Ops/h	120
Total break time at short-circuit		ms	< 10

Terminal capacity

Standard equipment			Screw connection
Round copper conductor			
Box terminal			
Solid		mm^2	1 x (12 … 6)
Stranded		mm^2	1 x (4 … 350)
Tunnel terminal			
Solid		mm^2	1 x 16
Stranded			
Stranded		mm^2	1 x (4 … 350)
Bolt terminal and rear-side connection			
Direct on the switch			
Solid		mm^2	1 x (11 … 6)
Stranded		mm^2	1 x (4 … 3/0)
Al conductors, Cu cable			
Tunnel terminal			
Solid		mm^2	1 x 16
Bolt terminal and rear-side connection			
Flat copper strip, with holes	min.	mm	2 x 16 x 0.8
Flat copper strip, with holes	max.	mm	10 x 16 x 0.8
Cu strip (number of segments x width x segment thickness)			
Box terminal			
	min.	mm	2 x 9 x 0.8
	max.	mm	10 x 16 x 0.8
Bolt terminal and rear-side connection			
Flat copper strip, with holes	min.	mm	2 x 16 x 0.8
Flat copper strip, with holes	max.	mm	10 x 16 x 0.8
Copper busbar (width x thickness)	mm		
Bolt terminal and rear-side connection			
Screw connection			M8
Direct on the switch			
	min.	mm	16 x 5
	max.	mm	20 x 5
Control cables			
		mm^2	1 x (18 … 14)

			2 x (18 … 16)

Design verification as per IEC/EN 61439

Technical data for design verification			
Rated operational current for specified heat dissipation	I_n	A	140
Equipment heat dissipation, current-dependent	P_{vid}	W	16.17
Operating ambient temperature min.		°C	-25
Operating ambient temperature max.		°C	70
IEC/EN 61439 design verification			
10.2 Strength of materials and parts			
10.2.2 Corrosion resistance			Meets the product standard's requirements.
10.2.3.1 Verification of thermal stability of enclosures			Meets the product standard's requirements.
10.2.3.2 Verification of resistance of insulating materials to normal heat			Meets the product standard's requirements.
10.2.3.3 Verification of resistance of insulating materials to abnormal heat and fire due to internal electric effects			Meets the product standard's requirements.
10.2.4 Resistance to ultra-violet (UV) radiation			Meets the product standard's requirements.
10.2.5 Lifting			Does not apply, since the entire switchgear needs to be evaluated.
10.2.6 Mechanical impact			Does not apply, since the entire switchgear needs to be evaluated.
10.2.7 Inscriptions			Meets the product standard's requirements.
10.3 Degree of protection of ASSEMBLIES			Does not apply, since the entire switchgear needs to be evaluated.
10.4 Clearances and creepage distances			Meets the product standard's requirements.
10.5 Protection against electric shock			Does not apply, since the entire switchgear needs to be evaluated.
10.6 Incorporation of switching devices and components			Does not apply, since the entire switchgear needs to be evaluated.
10.7 Internal electrical circuits and connections			Is the panel builder's responsibility.
10.8 Connections for external conductors			Is the panel builder's responsibility.
10.9 Insulation properties			
10.9.2 Power-frequency electric strength			Is the panel builder's responsibility.
10.9.3 Impulse withstand voltage			Is the panel builder's responsibility.
10.9.4 Testing of enclosures made of insulating material			Is the panel builder's responsibility.
10.10 Temperature rise			The panel builder is responsible for the temperature rise calculation. Eaton will provide heat dissipation data for the devices.
10.11 Short-circuit rating			Is the panel builder's responsibility. The specifications for the switchgear must be observed.
10.12 Electromagnetic compatibility			Is the panel builder's responsibility. The specifications for the switchgear must be observed.
10.13 Mechanical function			The device meets the requirements, provided the information in the instruction leaflet (IL) is observed.

Technical data ETIM 8.0

Low-voltage industrial components (EG000017) / Motor protection circuit-breaker (EC000074)			
Electric engineering, automation, process control engineering / Low-voltage switch technology / Circuit breaker (LV < 1 kV) / Motor protection circuit-breaker (ecl@ss10.0.1-27-37-04-01 [AGZ529016])			
Overload release current setting		A	70 - 140
Adjustment range undelayed short-circuit release		A	140 - 1960
With thermal protection			Yes
Phase failure sensitive			Yes
Switch off technique			Electronic
Rated operating voltage		V	690 - 690
Rated permanent current Iu		A	140
Rated operation power at AC-3, 230 V		kW	45
Rated operation power at AC-3, 400 V		kW	75
Type of electrical connection of main circuit			Screw connection
Type of control element			Rocker lever
Device construction			Built-in device fixed built-in technique
With integrated auxiliary switch			No
With integrated under voltage release			No
Number of poles			3
Rated short-circuit breaking capacity Icu at 400 V, AC		kA	35

Degree of protection (IP)			IP20
Height		mm	195
Width		mm	105
Depth		mm	149

Approvals

Product Standards			UL 489; CSA-C22.2 No. 5-09; IEC 60947-2; CE marking
UL File No.			E31593
UL Category Control No.			DIVQ
CSA File No.			022086
CSA Class No.			1432-01
North America Certification			UL listed, CSA certified
Specially designed for North America			Yes, additionally calibrated according to UL 508.
Suitable for			Feeder circuits, branch circuits
Current Limiting Circuit-Breaker			Yes
Max. Voltage Rating			480 V
Degree of Protection			IEC: IP20; UL/CSA Type: -

Characteristics

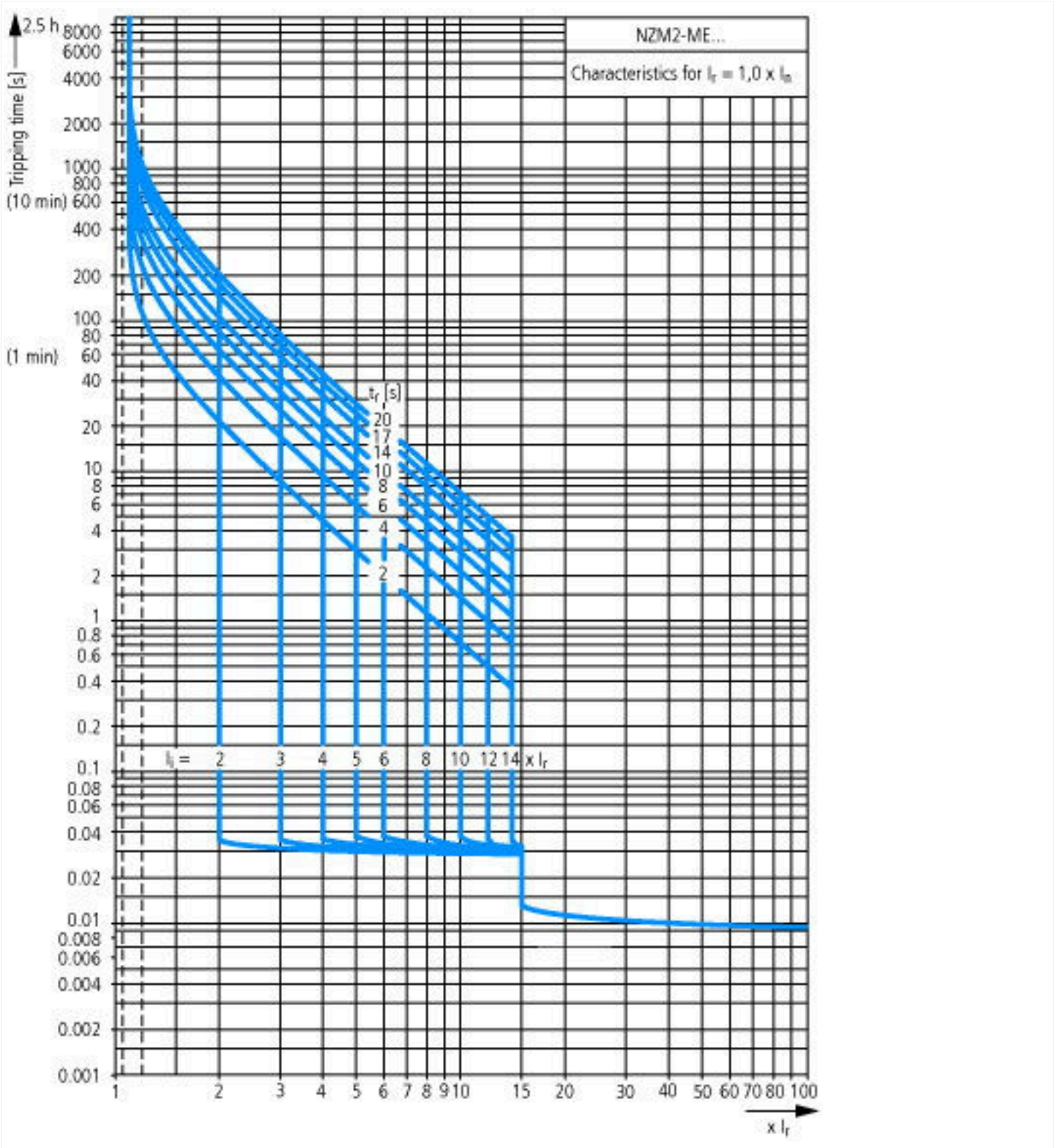

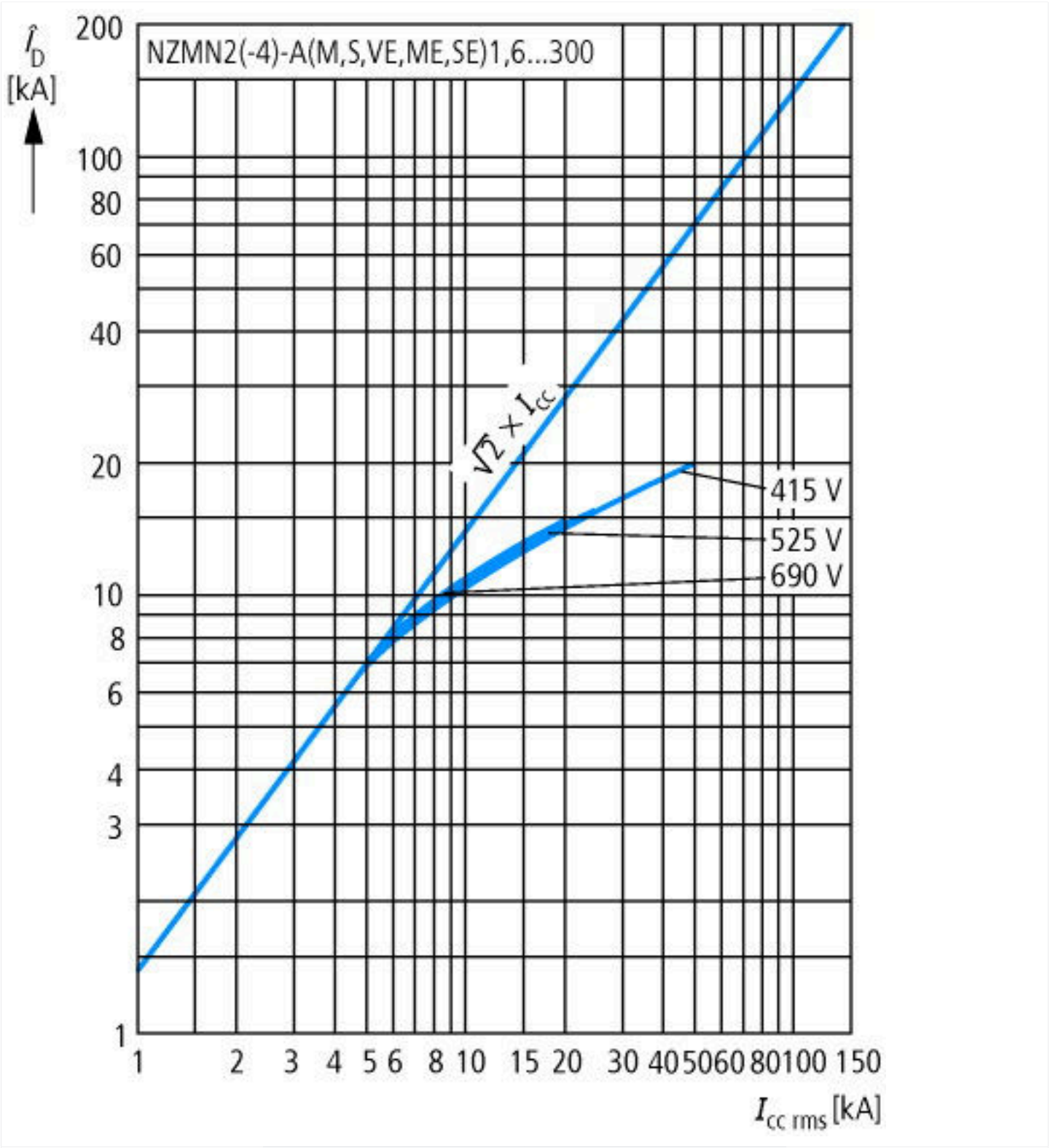

Let-through current

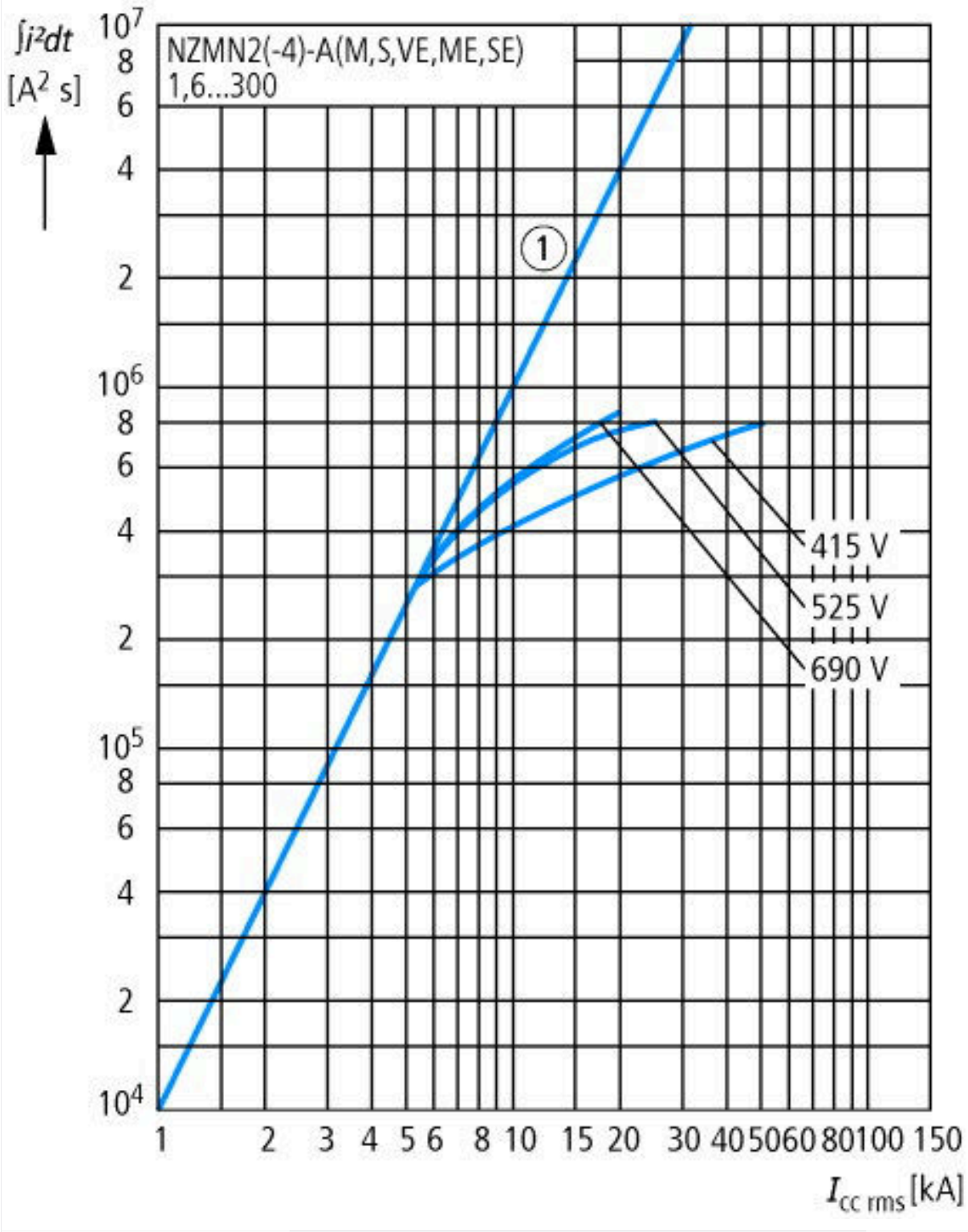

Let-through energy

Dimensions

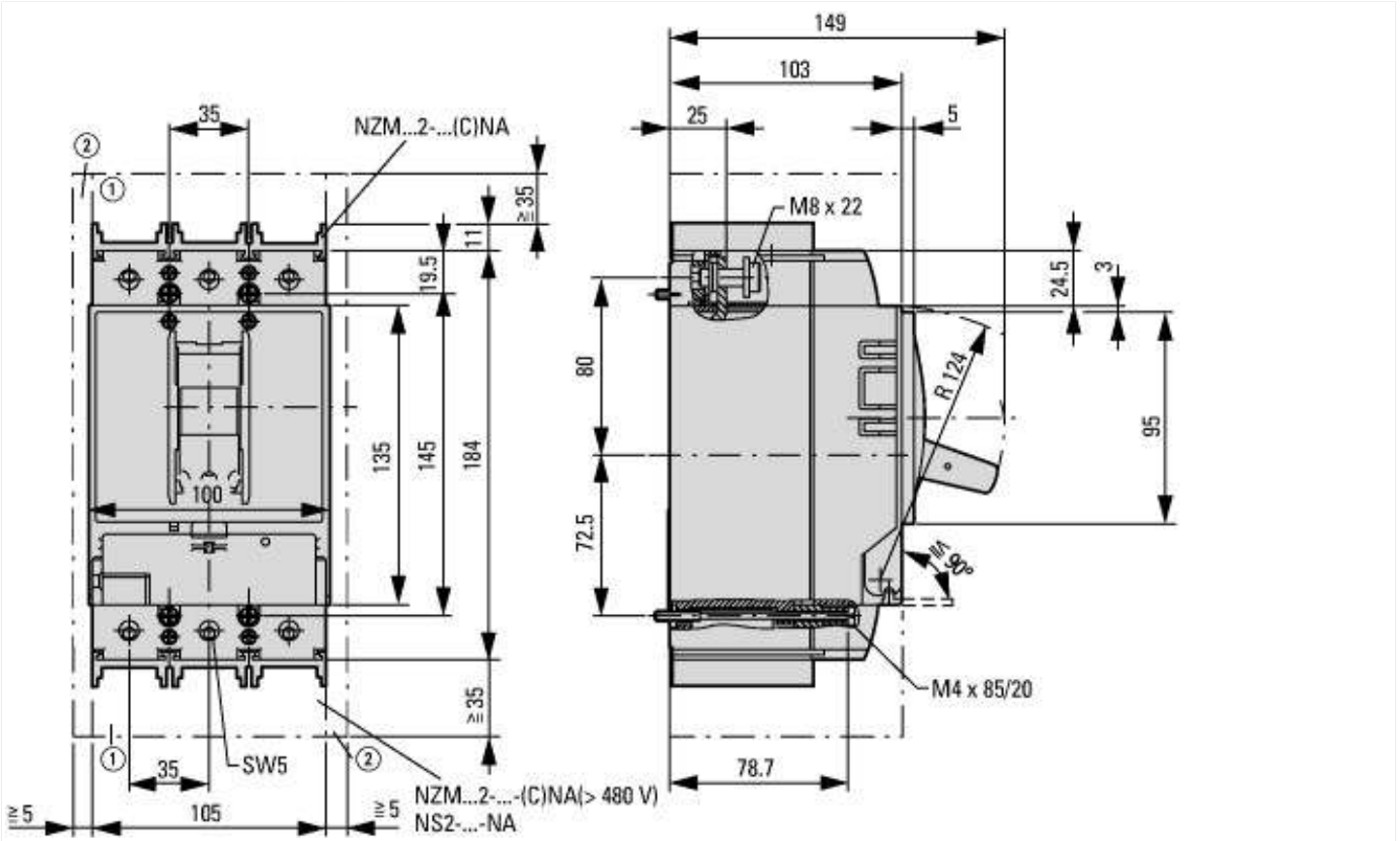

① Blow out area, minimum clearance to adjacent parts
② Minimum clearance to adjacent parts

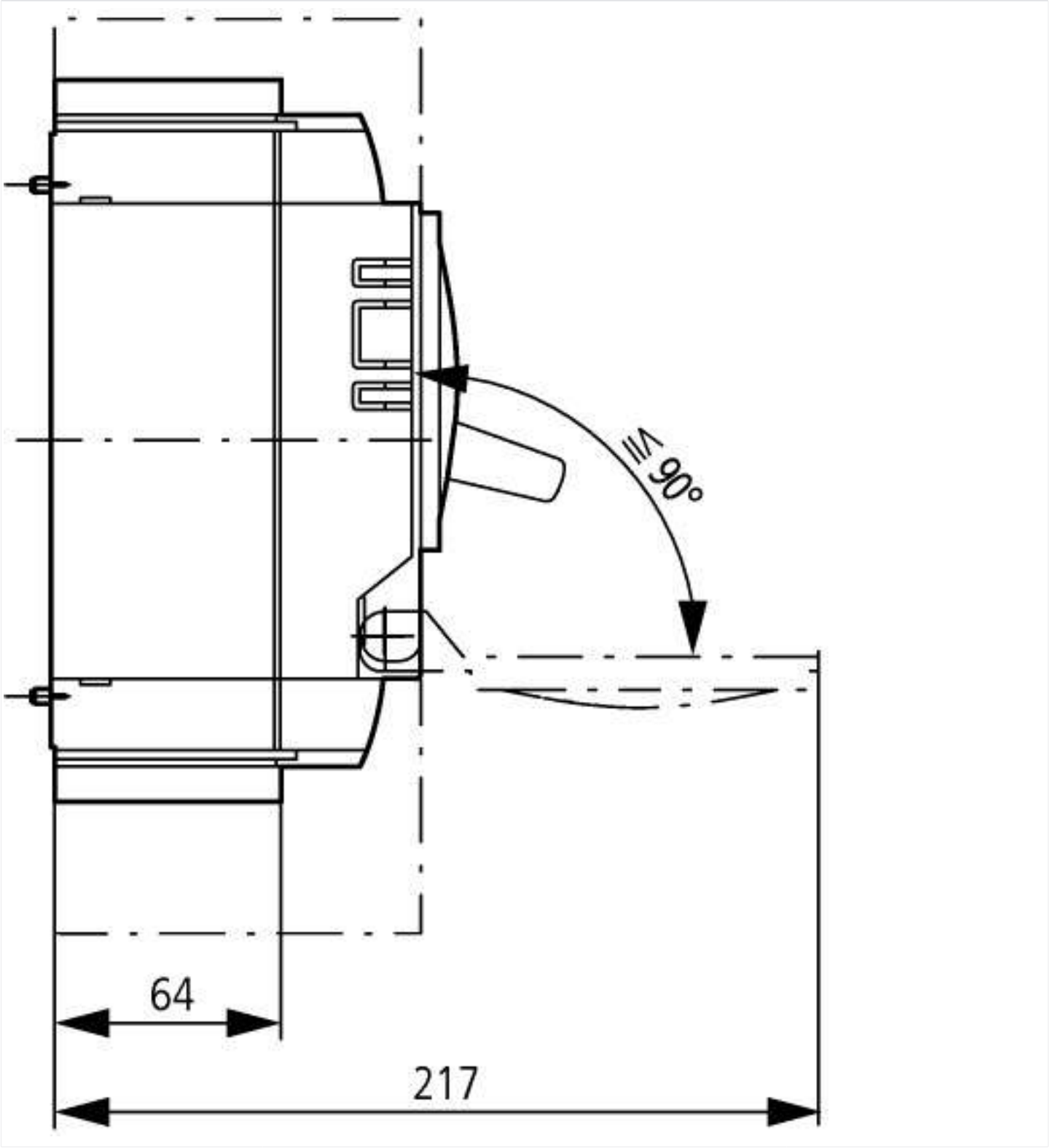

Additional product information (links)

IL01206006Z (AWA1230-1916) Circuit breaker, disconnector	
IL01206006Z (AWA1230-1916) Circuit breaker, disconnector	https://es-assets.eaton.com/DOCUMENTATION/AWA_INSTRUCTIONS/IL01206006Z2015_11.pdf
Weight	http://ecat.moeller.net/flip-cat/?edition=HPLEN&startpage=17.171
Temperature dependency, Derating	http://ecat.moeller.net/flip-cat/?edition=HPLEN&startpage=17.172
Effective power loss	http://ecat.moeller.net/flip-cat/?edition=HPLEN&startpage=17.174
additional technical information for NZM power switch	https://es-assets.eaton.com/DOCUMENTATION/PDF/nzm_technic_de_en.pdf

© 07/2022 by Eaton Industries GmbH