O5G500

Retro-reflective sensor for the detection of transparent objects

O5PGFAKG/US100

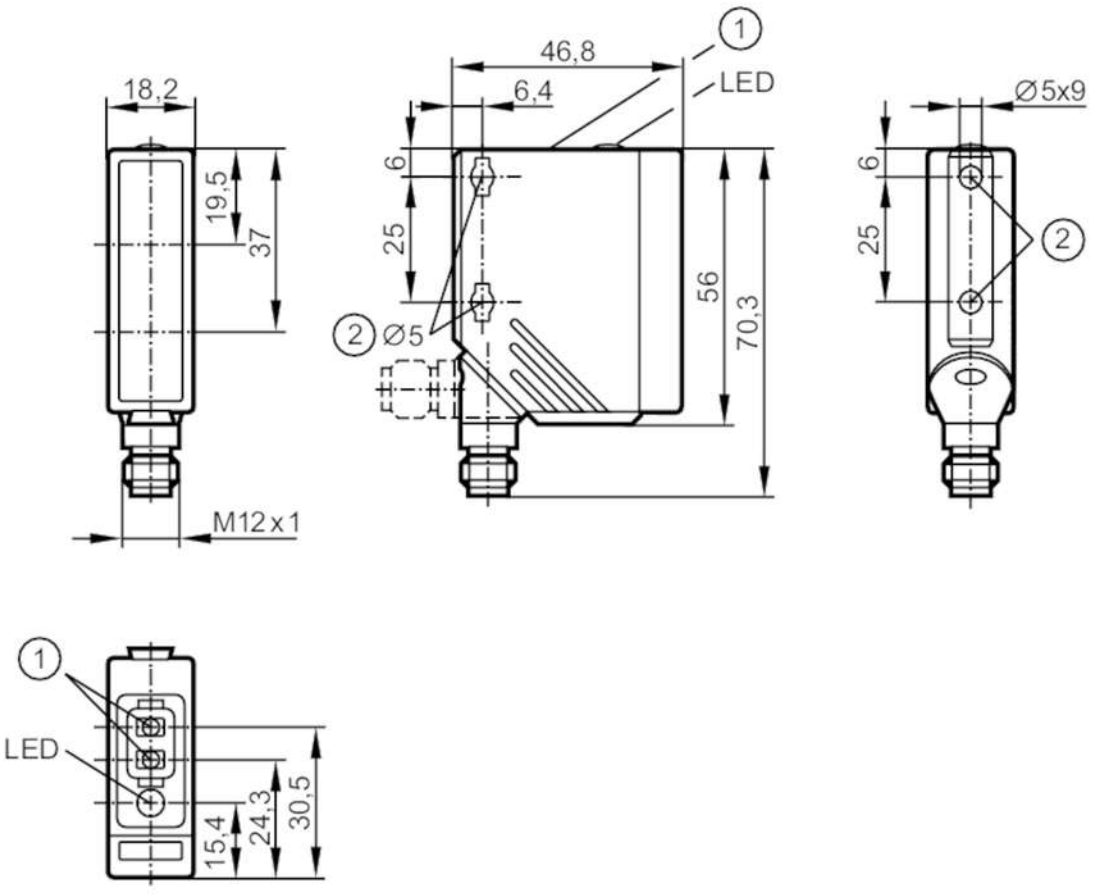

1 programming buttons
2 When a M5 mounting screw is used, the max. tightening torque is 2 Nm.

Product characteristics		
Type of light		red light
Housing		rectangular
Application		
Special feature		polarisation filter; Function check output
Function principle		Retro-reflective sensor
Electrical data		
Operating voltage	[V]	10...36 DC; ("supply class 2" to cULus)
Current consumption	[mA]	< 50
Protection class		II
Reverse polarity protection		yes
Type of light		red light
Wave length	[nm]	624
Outputs		
Electrical design		PNP/NPN; (automatic load detection PNP/NPN)
Output function		light-on/dark-on mode; (programmable)
Max. voltage drop switching output DC	[V]	2.5

O5G500

Retro-reflective sensor for the detection of transparent objects

O5PGFAKG/US100

Function check output			yes
Max. voltage drop of function check output	[V]		2.5
Max. current load for function check output	[mA]		50
Permanent current rating of switching output DC	[mA]		200
Switching frequency DC	[Hz]		1500
Short-circuit protection			yes
Type of short-circuit protection			pulsed
Overload protection			yes
Detection zone			
Range referred to prismatic reflector	[m]		0...3; (Prismatic reflector 100 x 100 mm E20454)
Range adjustable			yes
Max. light spot diameter	[mm]		80
Light spot dimensions refer to			at maximum range
Polarisation filter available			yes
Operating conditions			
Ambient temperature	[°C]		-25...60
Protection			IP 67
Tests / approvals			
EMC		EN 60947-5-2	
MTTF	[years]		405
Mechanical data			
Weight	[g]		73
Housing			rectangular
Dimensions	[mm]		56 x 18.2 x 46.8
Materials			housing: PA; bezel: stainless steel; operator interface: TPU
Lens material			PMMA
Lens alignment			side lens
Displays / operating elements			
Display		switching status	1 x LED, yellow
		function	1 x LED, red
Teach function			yes
Electronic lock			yes
Remarks			
Pack quantity			1 pcs.

O5G500

Retro-reflective sensor for the detection of transparent objects

O5PGFAKG/US100

Electrical connection

Connector: 1 x M12; coding: A

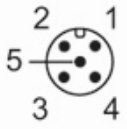

Connection

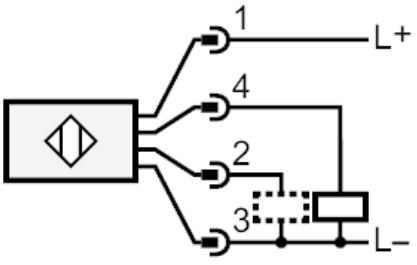

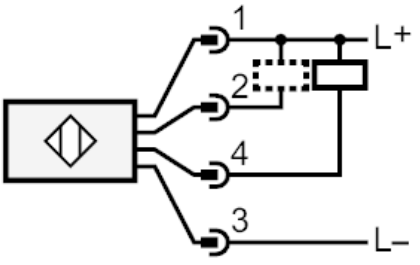

2	Function check output
4	switching output
2+4	automatic load detection PNP/NPN
5	n.c. = not used

O5G500

Retro-reflective sensor for the detection of transparent objects

O5PGFAKG/US100

Diagrams and graphs

excess gain graph

