OKdo ROCK 3A + ROCK 3C Case

PRODUCT OVERVIEW

Case designed and manufactured in the UK specifically for the OKdo ROCK 3A + ROCK 3C Single Board Computer (SBC) boards. Tailor-made to protect your the SBC boards while also allowing external access to all ports and pins. If you need to access the internal board, the clip-together construction allows you to easily disassemble and reassemble the case without screws!



FEATURES

100% Recylable Material
Moulded in recyclable Black ABS UL94-HB with a smooth finish.

Integrated Cooling Support
The case features a 25mm fan grill moulded into the top with 4 mounting points.



Expansion Knockouts
3 knockouts moulded into the top for access to 40P GPIO expansion (tool required).

CSI & DSI Connections
18mm ribbon cable slots on either side of the top aligned with CSI and DSI ports.

RTC + OTG Switch Access
Cutouts under RJ45 and USB connectors for access to RTC + OTG switches.

LED Visibility
Two small holes which allow the Power LED and User LED to be seen externally.

Snap-Fit Design
Easily assemble and disassemble the case without screws.

Access to Power
Holes moulded into case for easy access to tact-switch buttons on ROCK 3A or 3C.

Mounting Versatility
Mount via double-ended keyhole slots or two holes for the CDR DIN Rail Bracket.

Surface Stability
Supplied with four push-fit rubber feet for use and stability on a desktop surface.

TF + M.2 M-KEY Access
Base includes a slot for access to the TF connector (SD Card) and M.2 M-KEY.

Internal Clearance
25.7mm above SBC for standoffs and 6.5mm below for mounting EMCC chip.

SPECIFICATION

GENERAL SPECIFICATION	
Colour / Finish	Black / Smooth
Material	ABS Plastic
Flame Rating	UL94-HB
Rating	IP20
Operating Temperature	+5°C to +70°C

UNIT INCLUDES		
NO.	PART	PIECES
1	Top	1
2	Base	1
3	Rubber Feet	4

ROCK 3A or ROCK 3C boards not provided with the case.

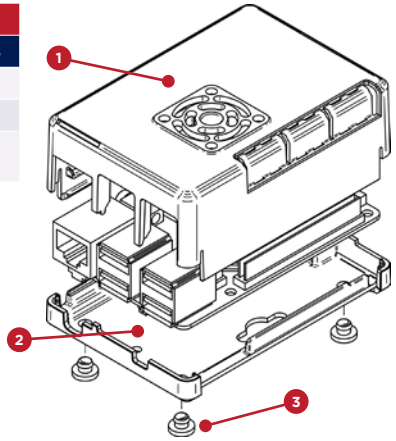

DIMENSIONS

TOP & BASE NO BOARD	EXTERNAL DIMENSIONS			INTERNAL DIMENSIONS		
	L	W	H	L	W	H
CMROCK_3AC/KIT	88.7	61.9	35.7	85	59	31.7

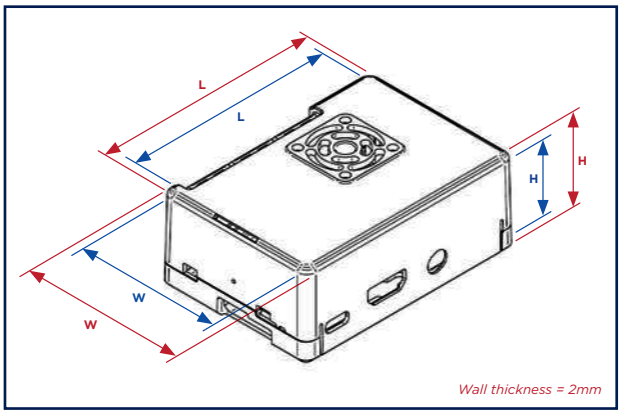

Wall thickness = 2mm

CLEARANCE WITH BOARD	BELOW BOARD			ABOVE BOARD		
	L	W	H	L	W	H
CMROCK_3AC/KIT	85	48	6.5	85	59	25.7

+44 (0)1638 716101 | sales@camdenboss.com | www.camdenboss.com

We operate a constant improvement policy, our products are subject to change without notice.

Vers 1

ROCK 3A + ROCK 3C Assembly

THREE STEP ASSEMBLY

1. Board hooks under ledge on the end of the base and rests on ledges on either side.

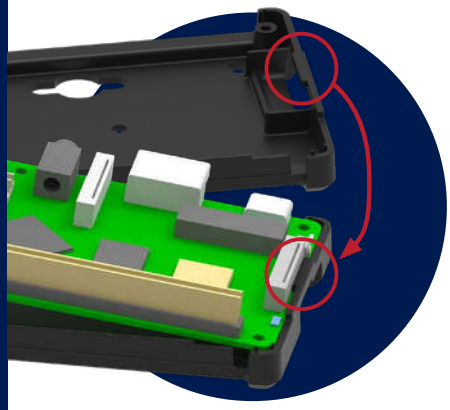

2. Option to screw down board to 1 x pillar with an M2.5 screw and clearance for 3 x standoffs.

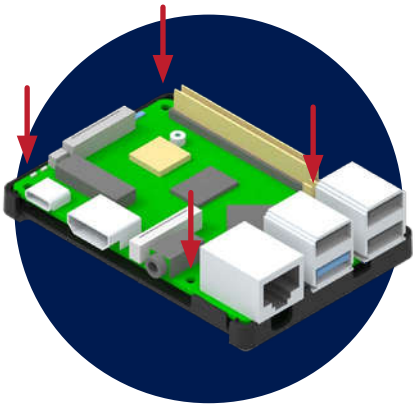

3. Top of case snaps into place over the board and secures it in place with 3 x board retaining tabs.

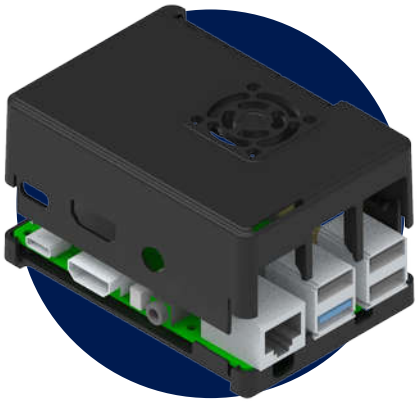

TECHNICAL DRAWINGS

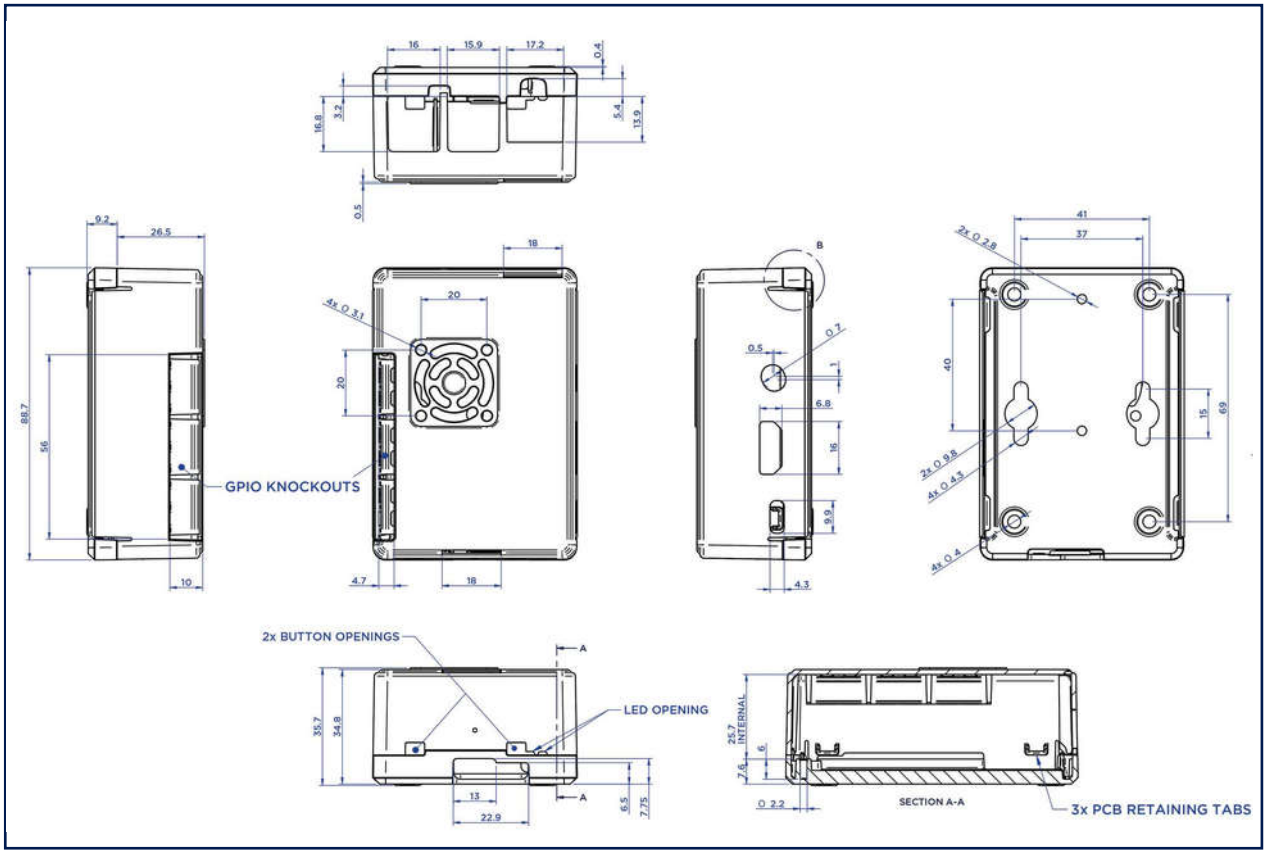

+44 (0)1638 716101 | sales@camdenboss.com | www.camdenboss.com

We operate a constant improvement policy, our products are subject to change without notice.

Vers 1