Mini installation beacon / MC55

MC55 Touch 24VDC O NPN



Part No.:	**240.260.55**
Series:	**MC55**

MECHANICAL DATA	
Height	79 mm
Diameter	55 mm
Materials	PC
Dome colour	Tranclucent
Housing colour	Black
Protection category	IP65 IP69K
Connection	M12 plug 5-pole
Type of fixing	Built-in mounting
Working temperature minimum	-20°C
Working temperature maximum	+50°C
Weight with packaging	91 g
Product weight	63 g

ELECTRICAL DATA	
Operating voltage	24V
Operating voltage type	DC
Operating voltage tolerance	+/- 10%
Rated operational voltage	24 VDC
Rated operational current	50 mA
Continuous output current	max. 200mA
Protection class	Protection class 2
Pollution degree	3 In the connection area: 2
Overvoltage category	I

OPTICAL DATA	
Light source	LED
Light colour	MC 3 colours
Optical signal image	Permanent
Service life optical	50,000 h maximum

APPROVAL DATA	
Conforms with CE	Yes
Conforms with RoHS directive	Yes
WEEE	Yes
Conforms with UL	cULus
UL Type Rating	Type 4X
Conforms with UKCA (Importer)	Yes (WERMA (UK) Ltd.)
Conforms with RoHS CN	25 years

! For additional installation and mounting information, refer to the appropriate user guide at www.werma.com. This printed copy is for information only and is subject to alteration.

Mini installation beacon / MC55

MC55 Touch 24VDC O NPN

DRAWING

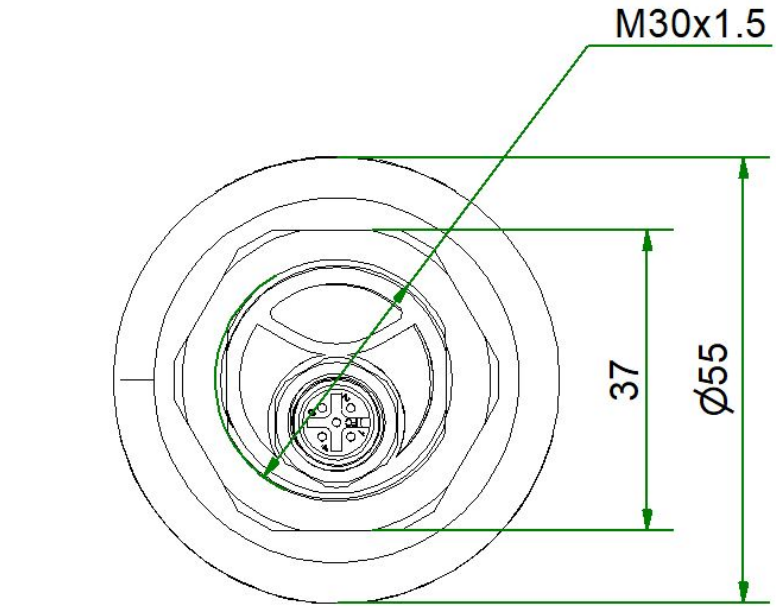

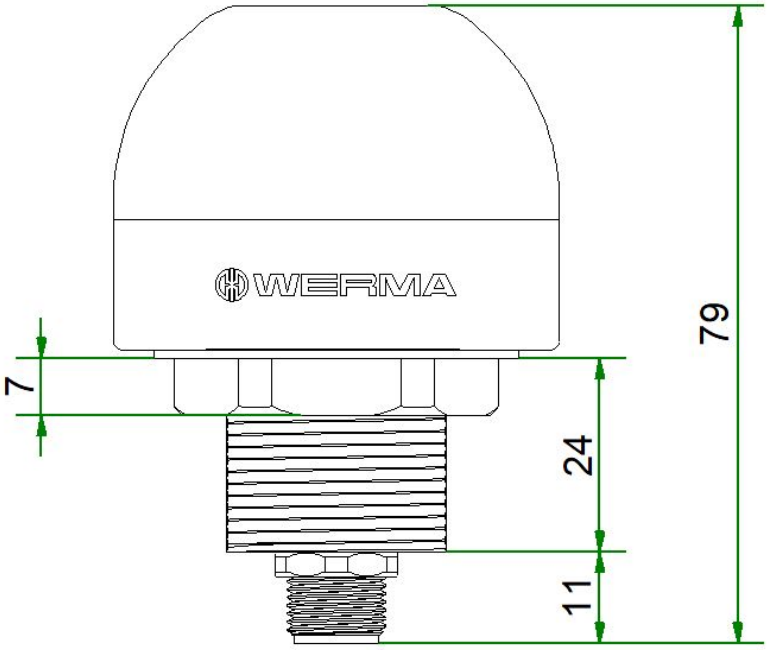

! For additional installation and mounting information, refer to the appropriate user guide at www.werma.com. This printed copy is for information only and is subject to alteration.