Product Data Sheet 2CTC432315D0201

OVR T2 3N 80-275s P TS QS

2CTB815708R0800

EAN : 3660308525444
FR : B752544

09/11/2016

Type
T2
Imax : 80 kA
Up : 1,4 kV
System
TT/TN-S: 230/400 V
IEC 61643-11 EN 61643-11

Type 2 SPD's are designed to discharge the currents generated by indirect lightning strikes causing induced or conducted overvoltages on the power distribution network.

They are characterized by an 8/20µs waveform (Imax). Higher is the Imax, more powerful they are.
They are installed in the main distribution switchboard but also in sub-distribution board.
They have a low residual voltage Up often compatible with the withstand voltage of the equipment to protect.

Thanks to the patented Safety Reserve system, you can extend the lifespan of the installation plan maintenance to reduce downtime risk.



- Patented QuickSafe ® technology
- Safety Reserve system
- Din rail mounting
- Pluggable
- Improved safety
- Back up protection up to 160 A Fuse or 125 A Mcb

CHARACTERISTICS

Key characteristics			
Protection mode			L-N/L-PE/N-PE
Number of protected lines			4
Test class			II
Integrated thermal disconnector			Yes
End of life indicator			Yes
Safety reserve			Yes
Electrical characteristics			
Nominal discharge current	I_n (8/20)	kA	20
Maximal discharge current	I_{max} (8/20)	kA	80
Impulse current	I_{imp} (10/350)	kA	6,25
Maximal continuous operating voltage	U_C	V	275
Maximal continuous operating voltage d.c	$U_{C\,d.c}$	V	-
Type of current / frequency		Hz	a.c. 47-63
Voltage protection level at In	U_p (L-PE)	kV	1,5
Voltage protection level at In	U_p (L-N)	kV	1,4
Voltage protection level at In	U_p (N-PE)	kV	1,4
Short circuit withstand	I_{SCCR}	kA	100
Total current	I_{TOTAL}	kA	80
Follow current interrupted	I_{fi}	kA	- / 0,1
Ground residual current	I_{PE}	µA	<10
TOV withstand (L-N : 5s / N-PE : 200 ms)	U_T	V	337 / 1200
Voltage Combination Wave	U_{OC}	kV	-
Required thermal/back up protection			
Curve B or C Circuit breaker		A	≤ 125
gG - gL fuse		A	≤ 160
Comments			
Mechanical characteristics			
Dimensions	H x W x D	mm	95x71.2x69.4
Wire range : Solid wire		mm²	2.5 ... 35
Wire range : Stranded wire		mm²	2.5 ... 25
Stripping length		mm	12.5
Packing quantities		piece	Per 1
Miscellaneous characteristics			
Maximal altitude		m	2 000
Weight		g	600
Response time		ns	<25
Fire resistance according to UL 94			V-0
Replacement cartridges			
Phase / Product ID	OVR T2 80-275s C QS		2CTB815708R2600
Neutral / Product ID	OVR T2 N 80-275s C QS		2CTB815708R2800

INSTALLATION

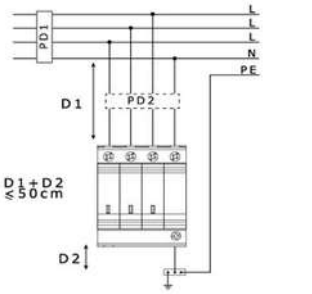

PD1+PD2

DIAGRAM

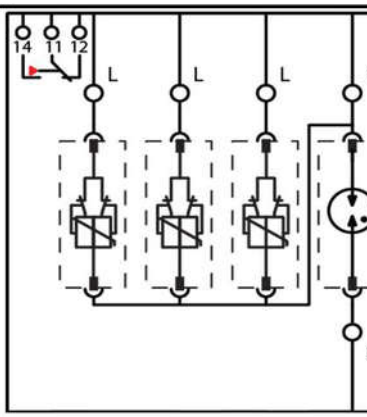



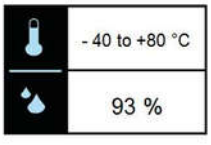

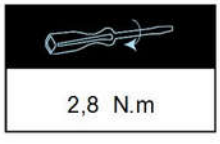

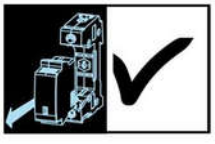

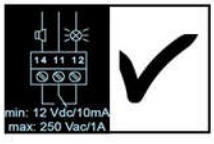

Power and productivity for a better world™