The SKINTOP® MS-M / MSR-M is a nickel-plated brass cable gland with metric connecting thread which combines high quality regarding consistency and reliability. It is especially designed for use in manufacturing of machines and equipment, in measuring, controlling as well as in the pharmaceutical industry and for medical equipment.
The sizes SKINTOP® MS-M / MSR-M75x1,5, M90x2, M110x2 with innovative double lamella insert for easier assembling of cables with larger diameters. Proven functionality also during hardest cleaning procedures at industrial machinery with high-pressure cleaners and hot water.



Components:

Gland body	Brass, nickel-plated
Cap nut	Brass, nickel-plated
Insert with lamellar cage	Polyamide, V-2 acc. to UL 94
Sealing ring	CR (ozone- and UV-resistant)
O-ring	NBR (ozone- and UV-resistant)

Technical features:

Connecting thread	M12x1.5 up to M110x2 acc. to DIN EN 60423
Protection class / NEMA Enclosure types	IP 68 – 10bar / 30min for M12x1,5 to M50x1,5 acc. to DIN EN 60529 IP 68 – 5bar / 30min for M63x1,5 acc. to DIN EN 60529 IP 68 – 1bar / 30min for M75x1,5 acc. to DIN EN 60529 IP 69 for M12x1,5 up to M63x1,5 acc. to DIN EN 60529 NEMA Type 1, Type 4x, Type 6 and Type 12
Strain relief	Category A according to DIN EN 62444
Temperature range	Dynamic -25°C up to +100°C Statically -40°C up to +100°C
Design	MS-M standard MSR-M with reducing sealing ring (for smaller cable diameters)

Other characteristics:

Maximum reliability
Optimal strain relief
Large, variable clamping ranges

Approvals:

UL File Nr. 79903

Norm references:

For more information please see our current catalogue.

MAST1 / 25.01.2017 / freigegeben

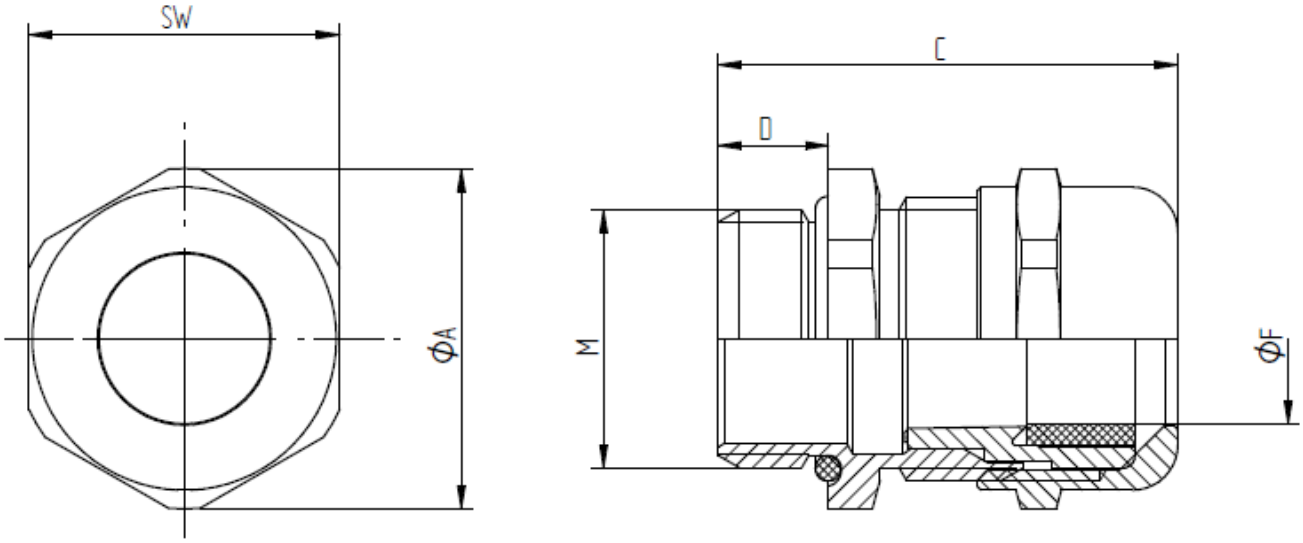

SKINTOP® MS-M

M	SW [mm]	Ø A [mm]	C max. [mm]	D [mm]	Ø F [mm] Clamping range	O-Ring [mm]	Article No.
M12x1,5	16	17,6	26,5	6,5	3,5 – 7	9x2	53112000
M16x1,5	20	22,0	33,0	7,0	4,5 – 10	13x2	53112010
M20x1,5	24	26,4	37,0	8,5	7 – 13	17x2	53112020
M25x1,5	29	31,9	38,5	8,0	9 – 17	22x2	53112030
M32x1,5	36	39,6	45,5	9,0	11 – 21	28x2	53112040
M40x1,5	45	49,5	48,0	9,0	19 – 28	36x2	53112050
M50x1,5	54	59,0	55,5	10,0	27 – 35	46x2	53112060
M63x1,5	67	73,5	67,0	15,0	34 – 45	57x2	53112070

SKINTOP® MSR-M

M	SW [mm]	Ø A [mm]	C max. [mm]	D [mm]	Ø F [mm] Clamping range	O-Ring [mm]	Article No.
M12x1,5	16	17,6	26,5	6,5	2 – 5	9x2	53112100
M16x1,5	20	22,0	33,0	7,0	2 – 7	13x2	53112110
M20x1,5	24	26,4	37,0	8,5	5 – 10	17x2	53112120
M25x1,5	29	31,9	38,5	8,0	6 – 13	22x2	53112130
M32x1,5	36	39,6	45,5	9,0	7 – 15	28x2	53112140
M40x1,5	45	49,5	48,0	9,0	15 – 23	36x2	53112150
M50x1,5	54	59,0	55,5	10,0	22 – 29	46x2	53112160
M63x1,5	67	73,5	67,0	15,0	28 – 39	57x2	53112170

MAST1 / 25.01.2017 / freigegeben

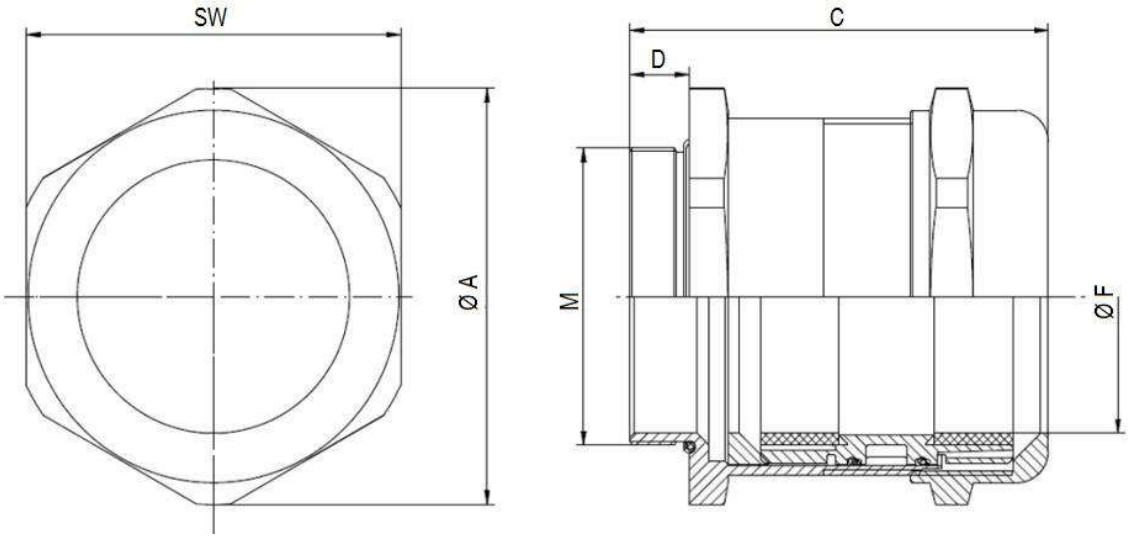

SKINTOP® MS-M75 / M90 / M110

M	SW [mm]	Ø A [mm]	C max. [mm]	D [mm]	Ø F [mm] Clamping range	O-Ring [mm]	Article No.
M75x1,5	95	105	105,0	15	58 – 68	65x2	53112510
M90x2	115	127	135,5	20	66 – 78	82x3	53112512
M110x2	135	150	154,0	25	86 – 98	100x3	53112514

SKINTOP® MSR-M75 / M110

M	SW [mm]	Ø A [mm]	C max. [mm]	D [mm]	Ø F [mm] Clamping range	O-Ring [mm]	Article No.
M75x1,5	95	105	105	15	53 – 63	65x2	53112511
M110x2	135	150	154	25	76 – 88	100x3	53112515

MAST1 / 25.01.2017 / freigegeben