SCHAEFFLER

Self-aligning ball bearings 1207-TVH (Series 12)

main dimensions to DIN 630

The datasheet is only an overview of dimensions and basic load ratings of the selected product. Please always observe all the guidelines in these overview pages. Further information is given on many products under the menu item "Description". You can also order comprehensive information via the Catalogue selection system (https://www.schaeffler.de/content.schaeffler.de/en/news_media/index.jsp) or by telephone on +49 (91 32) 82 - 28 97.

d	35	mm	
D	72	mm	
B	17	mm	
D_1	59,1	mm	
d_1	47,7	mm	
$D_{a\ max}$	65	mm	
$d_{a\ min}$	42	mm	
$r_{a\ max}$	1	mm	
r_{min}	1,1	mm	
m	0,324	kg	Mass

C_r	16000 N	Basic dynamic load rating, radial
C_{0r}	5100 N	Basic static load rating, radial
C_{ur}	325 N	Fatigue limit load, radial
n_G	11600 1/min	Limiting speed
$n_{\vartheta r}$	9800 1/min	Reference speed
e	0,22	
Y_1	2,8	
Y_2	4,34	
Y_0	2,94	

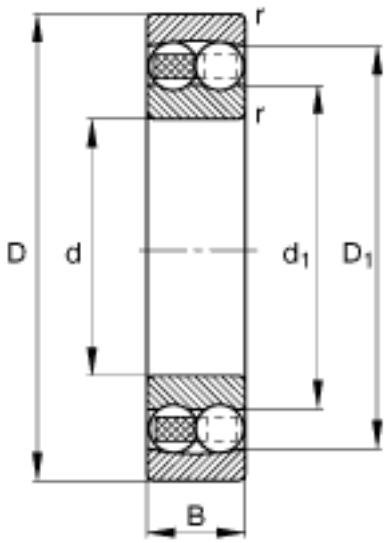

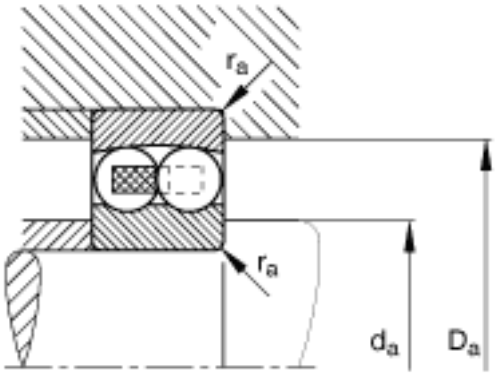
r_a
r_a
d_a
D_a