Techn. datasheet

Permanent Light 800 / Accessories

Tube D25mm 250mm long SR



Part No.:	975.840.25

MECHANICAL DATA	
Height	250 mm
Diameter	25 mm
Materials	Aluminium
Housing colour	Silver
Weight with packaging	76 g
Product weight	73 g

APPROVAL DATA	
WEEE	No
Conforms with RED directive	No
Conforms with ATEX-directive	No
Conforms with CCC	No
Conforms with UL	No
Conforms with FCC	No
Conforms with IC	No
EAC certificate available	No
Conforms with AS-I	No
ICAO Certification	No
Conforms with DNV	No
Conforms with RoHS CN	No

! For additional installation and mounting information, refer to the appropriate user guide at www.werma.com. This printed copy is for information only and is subject to alteration.

Permanent Light 800 / Accessories

Tube D25mm 250mm long SR

DRAWING

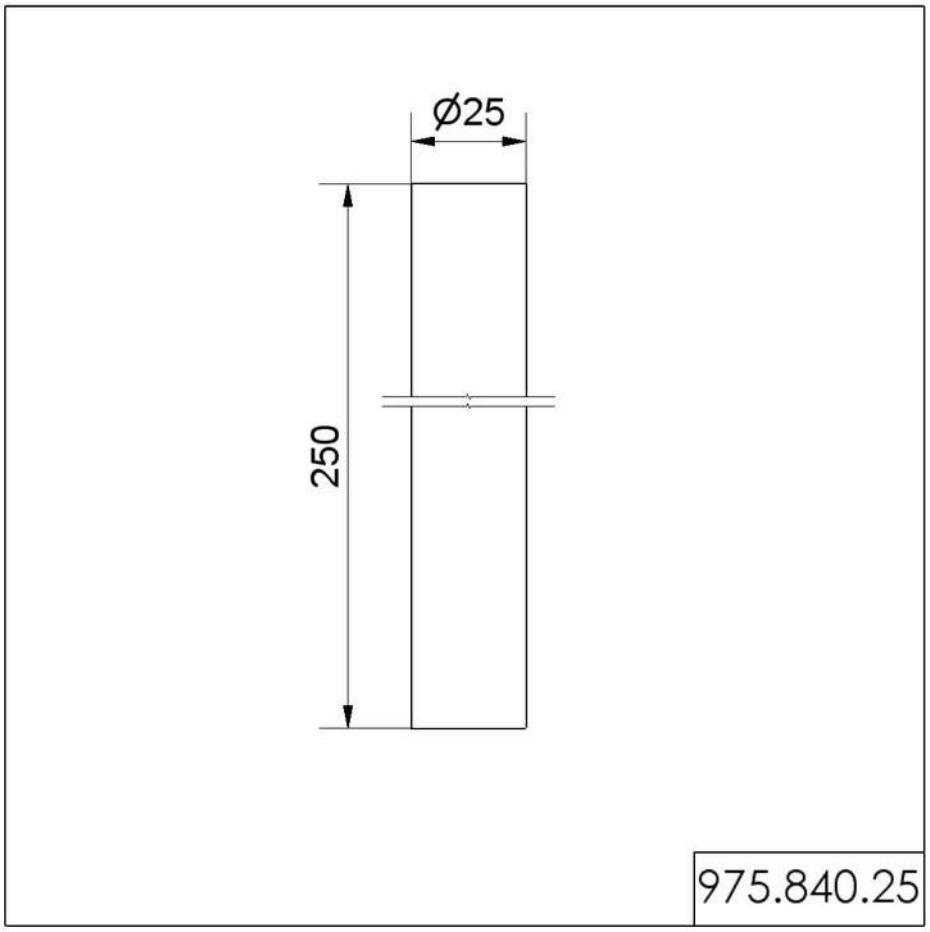

! For additional installation and mounting information, refer to the appropriate user guide at www.werma.com. This printed copy is for information only and is subject to alteration.