MURR ELEKTRONIK
stay connected

M12 FEMALE 90° FIELD-WIREABLE SCREW TERM.

4-pol. max.0,75mm² 6-8mm

Plastic housings with good resistance against chemicals and oils. The resistance to aggressive media should be individually tested for your application. Further details on request.

Link to Product

Illustration



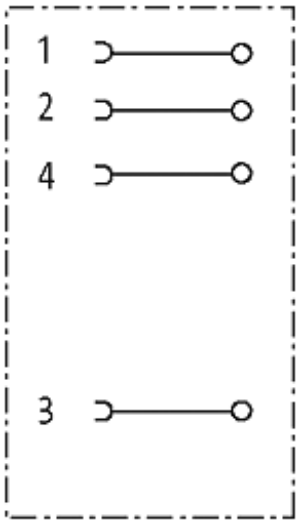

The information in this brochure has been compiled with the utmost care.
Liability for the correctness completeness and topicality of the information is restricted to gross negligence. Version: 08/17

MURR ELEKTRONIK
stay connected

Female

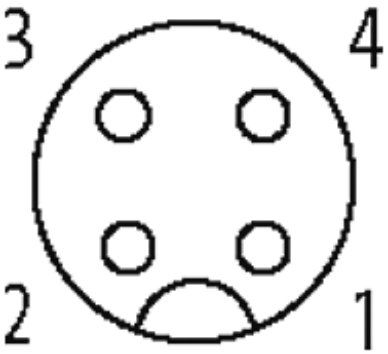

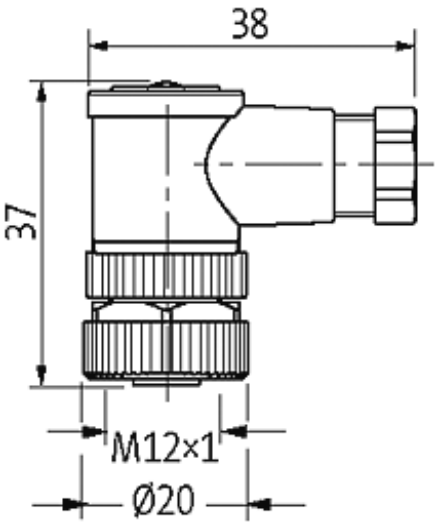

Product may differ from Image

Approvals

Form

Form	13021

Technical Data

Operating voltage	max. 250 V AC/DC
Operating current per contact	max. 4 A
Connection cross section	max. 0.75 mm²
Sealing range (cable Ø)	6...8 mm
Locking of ports	Screw thread M12 × 1 mm (recommended torque 0.6 Nm) self-securing
Protection	IP67 inserted and tightened (EN 60529)

The information in this brochure has been compiled with the utmost care.
Liability for the correctness completeness and topicality of the information is restricted to gross negligence. Version: 08/17

General data	
Temperature range	-25...+85 °C

Commercial data	
country of origin	DE
customs tariff number	85369010
EAN	4048879201506
eClass	27279221
minimum order quantity	1

The information in this brochure has been compiled with the utmost care.
Liability for the correctness completeness and topicality of the information is restricted to gross negligence. Version: 08/17