MALE END VIEW	FEMALE END VIEW
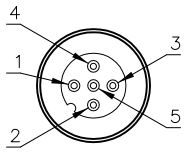	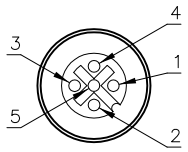
euro fast. DeviceNet™	euro fast. DeviceNet™

SPECIFICATIONS

CONTACT CARRIER MATERIAL	NYLON OR TPU
CONTACT MATERIAL/PLATING	BRASS/GOLD
HOUSING MATERIAL/PLATING	BRASS/NICKEL
RATED CURRENT [A]	4.0 A
RATED VOLTAGE [V]	150 V
NUMBER OF CONDUCTORS [AWG]	5x22 AWG
TEMPERATURE RANGE	−40°C to +105°C (−40°F to +221°F)
PROTECTION CLASS	MEETS NEMA 1,3,4,6P AND IEC IP67
GASKET MATERIAL	NITRILE (BUNA N)

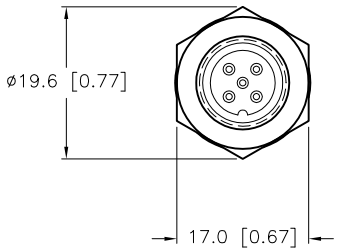

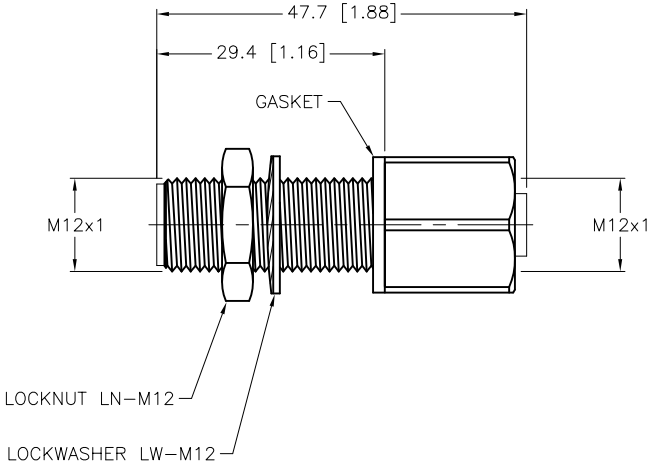

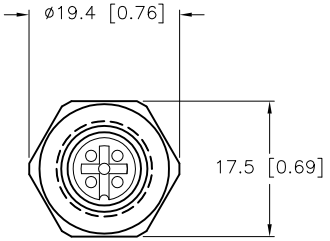

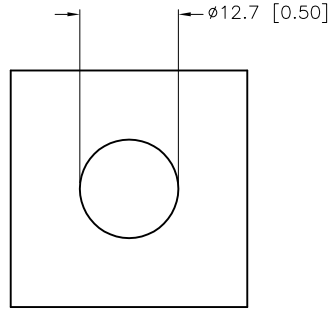

TYPICAL PANEL CUTOUT

REV	DESCRIPTION	BY	DATE	ECO NO.
G	UPDATE CONTACT CARRIER MATERIAL	RDS	02/23/12	27902

RELATED DOCUMENTS
1.
2.
3.
4.

MATERIAL

FINISH

3RD ANGLE PROJECTION

ALL DIMENSIONS DISPLAYED ON THIS DRAWING ARE FOR REFERENCE ONLY

CONTACT TURCK FOR MORE INFORMATION

THIS DRAWING IS CONFIDENTIAL AND THE PROPERTY OF TURCK INC. USE OF THIS DOCUMENT WITHOUT WRITTEN PERMISSION IS PROHIBITED.

DRFT IK
APVD
DATE 07/13/98
SCALE 1=1.0

UNIT OF MEASUREMENT
MILLIMETER [INCH]
DO NOT SCALE THIS DRAWING

TURCK INC
High Technology Sensors and Automation Controls
3000 CAMPUS DRIVE
MINNEAPOLIS, MN 55441
1−800−544−7769
(763) 553−7300
(763) 553−0708 fax
turck.com

DESCRIPTION
FKM FS 57/M12

IDENTIFICATION NO.
U1136

REV
G

FILE: U1136

SHEET 1 OF 1

Approved 02/24/2012, work order #25497 by A.A.