Datasheet

# Bayonet adaptor

## EBD12-M12X175



**Part Number :** EBD12-M12X175

**Product description :** Bayonet adaptor Ø12 M12X175 for temperature sensor.

**Product detail :** Bayonet adaptor for temperature sensor, thermocouple J,K or T for plastic manufacturing, bayonet Ø12 mm threading M12X175

## SPECIFICATIONS

| Attribut | Value |
|---|---|
| Accessorie Type : | Bayonet adaptors |
| Using with : | thermocouple sensor type J or K with bayonet adjustement |
| Threading : | M12X175 |
| Minimum Temperature : | 0°C |
| Maximum Temperature : | +350°C |
| Material : | nickel brass plated |
| Norm : | RoHS compliance |

## Embases *de raccordement*



| Références | Ø (mm) | Filetage |
|---|---|---|
| EBD10-M8X100 | 10 | M8 x 100 |
| EBD10-M10X100 | 10 | M10 x 100 |
| EBD10-M10X150 | 10 | M10 x 150 |
| EBD10-M12X100 | 10 | M12 x 100 |
| EBD10-M12X175 | 10 | M12 x 175 |
| EBD10-M14X150 | 10 | M14 x 150 |
| EBD10-M14X200 | 10 | M14 x 200 |
| EBD10-1/8GC | 10 | 1/8" GC |
| EBD10-1/4GC | 10 | 1/8" GC |

| Références | Ø (mm) | Filetage |
|---|---|---|
| EBD12-M10X150 | 12 | M10 x 150 |
| EBD12-M12X175 | 12 | M12 x 175 |
| EBD12-1/4GC | 12 | 1/4" GC |
| EBD12-3/8GC | 12 | 3/8"GC |
| EBD12-M10X100 | 12 | M10 x 100 |
| EBD12-M12X100 | 12 | M12 x 100 |
| EBD12-M14X150 | 12 | M14x150 |
| EBD14-M14x150 | 14 | M14x150 |
| EBD15-M12x100 | 15 | M12x100 |
| EBD15-1/4GC | 15 | 1/4" GC |
| EBD16-1/4GC | 16 | 1/4" GC |

## Bride de fixation *en fonte*



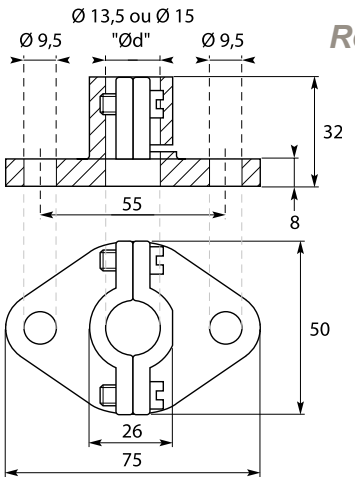


Réf. BRD "Ød"

| | |
|---|---|
| Ø 13,5 mm | 13,5 |
| Ø 15 mm | 15 |

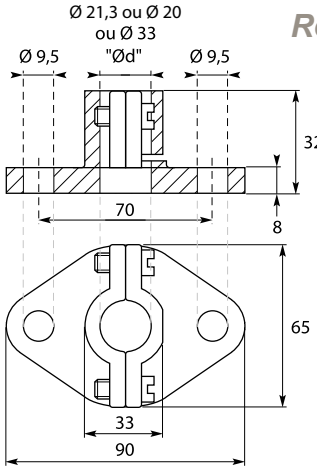


Réf. BRD

| | |
|---|---|
| Ø 20 mm | 20 |
| Ø 21,3 mm | 21,3 |
| Ø 33 mm | 33 |

## Bride circulaire *en aluminium*



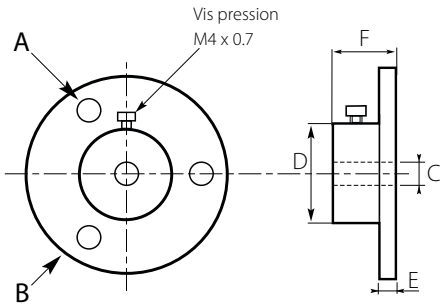


Ø de passage
Réf. BRD -A

| |
|---|
| 6 |
| 8 |

| Réf. | A | B | C | D | E | F |
|---|---|---|---|---|---|---|
| BRD8-A | 7 | 75 | 8.1 | 25 | 3 | 25 |
| BRD6-A | 4.6 | 50 | 6.1 | 20 | 5.2 | 15.5 |

## Bride de fixation *en inox*



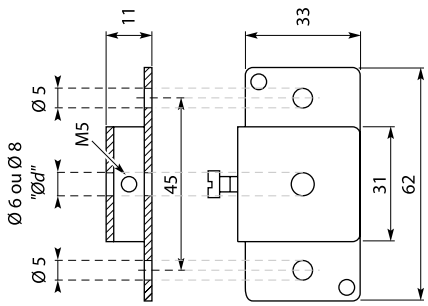


"Ød"
Réf. BRD -I

| | |
|---|---|
| Ø 6 mm | Ø6 |
| Ø 8 mm | Ø8 |