Pressure transmitter for applications in hazardous areas type
Type IS–3
Item no.: 48801939

MEASURING RANGE	
Measuring range	0 ... 400 bar
OUTPUT SIGNAL	
Output signal	4...20 mA, 2-wire
Permissible load in Ω	≤ (power supply - 11 V) / 0.02 A For the test circuit signal a load of ≤ 15 Ω applies
Adjustability	Zero/span adjustable
Electrical characteristics	Ui / V max = 30 V Ii / I max = 100 mA Pi = 800 mW (group III 750/650/550 mW) Ci = 16,5 nF + 0,2 nF/m Li = 0 µH + 2 µH/m
	T6 at 60 / T5 at 75 / T5 at 105
POWER SUPPLY	
Power supply	11...30 V DC
TIME BEHAVIOR	
Settling time	≤ 2 ms
ACCURACY INFORMATION	
Accuracy	0.5% of span
Non-linearity (BFSL]	≤ ±0.2 % of span
Long-term stability at reference conditions	≤ ± 0.2 % the span / year
Mean temperature coefficient of zero point (0 ... 80 °C)	≤ ± 0,2 % of span / 10 K
Mean temperature coefficient of span (0 ... 80 °C)	≤ ± 0,2 % of span / 10 K
Adjustability of zero point and span	± 5 %
TEMPERATURE INFORMATION	
Ambient temperature	Please refer to Operating Instruction
Media temperature	Please refer to Operating Instruction
Store temperature	-20 ... +80 °C
PROCESS CONNECTION	
Process connection	G 1/2 A DIN EN ISO 1179-2 (formerly DIN 3852-E)
Sealing	NBR

ELECTRICAL CONNECTION	
Electrical connection	Field case, conduit M20x1,5 female with spring clip terminal
Cable length	without
Reverse polarity protection	U+ against U-
Insulation voltage	DC 500 V
OPERATING ENVIRONMENT CONDITIONS	
Ignition protection type	Intrinsically safe
CE-CONFORMITY, APPROVALS AND CERTIFICATES	
Pressure devices directive	2014/68/EU
Electromagnetic compatibility (EMC)	2014/30/EU
explosion protection (ATEX)	2014/34/EU
Approvals	ATEX/IECEx
Additional certifications	without
Certificates	without

WIKA Instruments – 38 Avenue du Gros Chêne – 95220 HERBLAY
Phone0 820 95 10 10
info_fr@wika.com • http://www.wika.fr

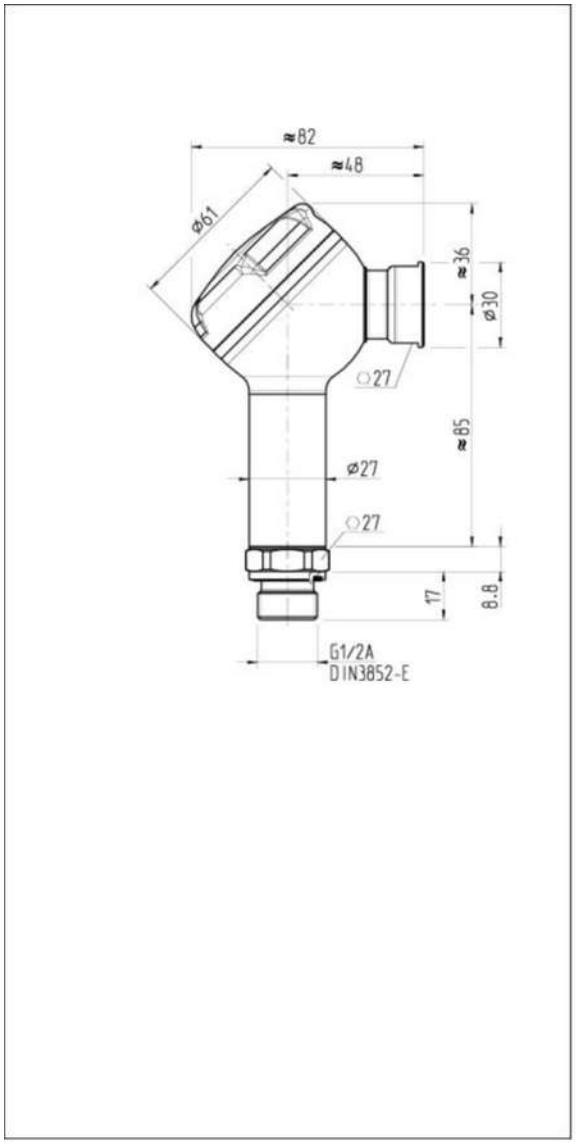

WIKA Instruments – 38 Avenue du Gros Chêne – 95220 HERBLAY
Phone0 820 95 10 10
info_fr@wika.com • http://www.wika.fr