

Model Number

NBN40-U1-E0

Features

- **40 mm not embeddable**
- **4 LEDs indicator for 360° all-round visibility**

Connection

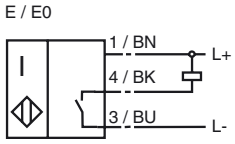

Accessories

V1-W
Non pre-wired cable socket

V1-W-2M-PUR
Cable connector

V1-G-2M-PUR
Cable connector

MHW 01
Mounting aid

V1-M20-80
Receptacles

Dimensions

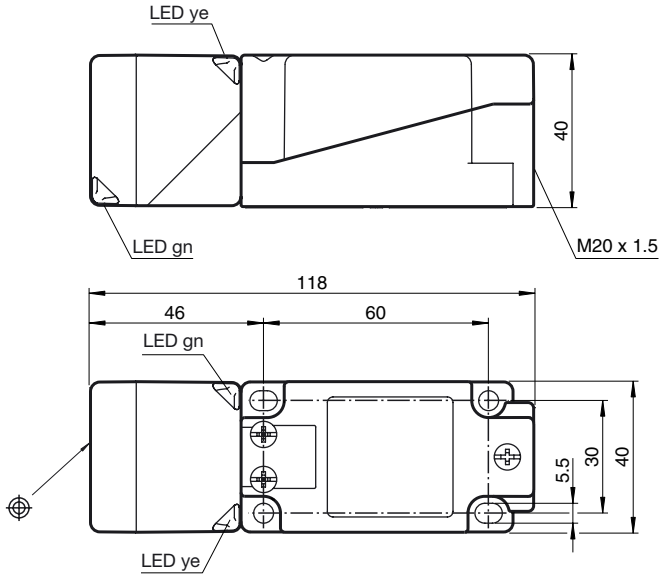

Technical Data

General specifications		
Switching element function		NPN Make function
Rated operating distance	s_n	40 mm
Installation		not embeddable
Output polarity		DC
Assured operating distance	s_a	0 ... 32.4 mm
Reduction factor r_{Al}		0.31
Reduction factor r_{Cu}		0.3
Reduction factor r_{V2A}		0.74
Reduction factor r_{Brass}		0.39
Nominal ratings		
Operating voltage	U_B	10 ... 30 V
Switching frequency	f	0 ... 150 Hz
Hysteresis	H	typ. 5 %
Reverse polarity protection		protected against reverse polarity
Short-circuit protection		pulsing
Voltage drop	U_d	≤ 2 V
Operating current	I_L	0 ... 200 mA
Off-state current	I_r	0 ... 0.5 mA typ. 0.1 µA at 25 °C
No-load supply current	I_0	≤ 20 mA
Operating voltage display		LED, green
Indication of the switching state		LED, yellow
Standard conformity		
Standards		IEC / EN 60947-5-2:2004
Ambient conditions		
Ambient temperature		-25 ... 85 °C (248 ... 358 K)
Mechanical specifications		
Connection type		terminal compartment M20, core cross-section ≤ 2,5 mm2
Housing material		PA/metal
Sensing face		PA
Protection degree		IP67 / IP69K
Mass		225 g
Note		Tightening torque: 1.8 Nm (housing) Tightening torque: 1.0 Nm (Screw terminal)
Approvals and certificates		
UL approval		cULus Listed, General Purpose

Release date: 2008-10-08 14:44 Date of issue: 2008-11-10 194777_ENG.xml