Magnetic Sensors

BMF 305K-PS-C-2-SA2-S49-00,3
Order Code: BMF005L

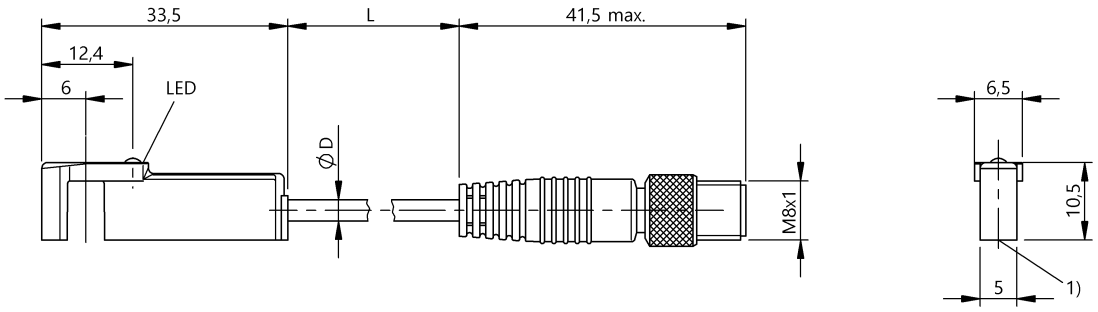

1) Sensing surface

Basic features

Application	larger actuators
Approval/Conformity	CE cULus EAC WEEE
Basic standard	IEC 60947-5-2
Not incl. in scope of delivery	Mounting bracket, e.g. BMF 305-HW-17
Principle of operation	Magnetic field sensor

Display/Operation

Function indicator	yes

Electrical connection

Cable	PUR, 0.3 m
Cable diameter D	2.90 mm
Connection	M8x1-Male, 3-pin
Polarity reversal protected	yes
Protection against device mix-ups	yes
Short-circuit protection	yes

Electrical data

Assured switching field strength Ha	2 kA/m
Hysteresis H max. (% of Hn)	45 %
Load capacitance max. at Ue	1 µF
No-load current Io max., undamped	10 mA
Operating voltage Ub	10...30 VDC
Output resistance Ra	Open drain
Rated insulation voltage Ui	75 V DC
Rated operating current Ie	200 mA
Rated operating voltage Ue DC	24 V
Rated short circuit current	100 A
Rated switch field strength Hn	1.2 kA/m
Residual current Ir max.	80 µA
Ripple max. (% of Ue)	15 %
Switching frequency	10000 Hz
Turn-off delay toff max.	0.05 ms
Turn-on delay ton max.	0.05 ms
Utilization category	DC -13
Voltage drop static max.	3.1 V

Environmental conditions

Ambient temperature	-25...85 °C
Contamination scale	3
EN 60068-2-27, Shock	Half-sinus, 30 g_n, 11 ms
EN 60068-2-6, Vibration	55 Hz, amplitude 1 mm, 3x30 min
ESD	4A(15kV)
IP rating	IP67

Magnetic Sensors

BMF 305K-PS-C-2-SA2-S49-00,3
Order Code: BMF005L

Functional safety

MTTF (40 °C)	330 a

Interface

Switching output	PNP normally open (NO)

Material

Housing material	LCP
Material jacket	PUR
Material sensing surface	PU

Mechanical data

Dimension	33.5 x 5 x 10.5 mm
Mounting part	Mounting bracket BMF 305-HW*

Range/Distance

Temp. drift max. (% of Hn)	0.3 %

Remarks

The sensor is functional again after the overload has been eliminated.
UL-MARKINGS: - For use in NFPA 79 Applications only - Adapters providing field wiring means are available from the manufacturer. Refer to manufacturers information.

For more information about MTTF and B10d see MTTF / B10d Certificate

Indication of the MTTF- / B10d value does not represent a binding composition and/or life expectancy assurance; these are simply experiential values with no warranty implications. These declared values also do not extend the expiration period for defect claims or affect it in any way.

Connector Drawings



Wiring Diagrams

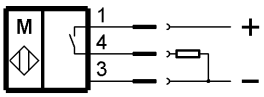

Technical Drawings

