Product data sheet
Characteristics

XMLP001GL71F
pressure transmitter 1bar - 0..10V - G1/4A male - FPM - cable PVC 2M



Main

Range of product	OsiSense XM
Product or component type	Electronic pressure sensors
Pressure sensor type	Pressure transmitter
Pressure sensor name	XMLP
Electrical circuit type	Control circuit
Pressure sensor size	1 bar
Local display	Without
Controlled fluid	Hydraulic oil -15...125 °C Gas -15...125 °C Air -15...125 °C Fresh water 0...125 °C
Fluid connection type	G 1/4A (male) conforming to DIN 3852-E
Electrical connection	Cable 2 m
[Us] rated supply voltage	24 V DC SELV, voltage limits: 12...33 V
Current consumption	< 7 mA
Type of output signal	Analogue
Analogue output function	0...10 V, 3-wire
Quantity per set	Set of 1
Type of packing	Individual

Complementary

Pressure setting range	0...1 bar
Maximum permissible accidental pressure	3 bar
Destruction pressure	5 bar
Materials in contact with fluid	Ceramic Stainless steel AISI 316L Fluorocarbon FPM
Operating position	Any position
Protection type	Load short-circuit Reverse polarity
Electromagnetic compatibility	Immunity to magnetic fields conforming to EN/IEC 61000-4-8 - test level 100 A/m (f = 50 Hz) 1.2/50 µs shock waves immunity test conforming to EN/IEC 61000-4-5 - test level 1 kV (f = 42 Ohm) Electrostatic discharge immunity test conforming to EN/IEC 61000-4-2 - test level 8 kV air, 4 kV contact Radiated RF fields conforming to EN/IEC 61000-4-6 - test level 10 V (f = 0.15...80 MHz) Electrical fast transient/burst immunity test conforming to EN/IEC 61000-4-4 - test level 2 kV Susceptibility to electromagnetic fields conforming to EN/IEC 61000-4-3 - test level 10 V/m (f = 80...1000 MHz)
[Uimp] rated impulse withstand voltage	0.5 kV
Response time on output	<= 2 ms for 92 % of full scale
Drift of the sensitivity	+/- 0.02 % of measuring range/°K
Drift of the zero point	+/- 0.02 % of measuring range/°K
Measurement accuracy	+/- 0.5 % of the measuring range
Repeat accuracy	+/- 0.1 % of the measuring range
Mechanical durability	>= 10000000 cycles
Product weight	0.171 kg

The information provided in this documentation contains general descriptions and/or technical characteristics of the performance of the products contained herein.
This documentation is not intended as a substitute for and is not to be used for determining suitability or reliability of these products for specific user applications.
It is the duty of any such user or integrator to perform the appropriate and complete risk analysis, evaluation and testing of the products with respect to the relevant specific application or use thereof.
Neither Schneider Electric Industries SAS nor any of its affiliates or subsidiaries shall be responsible or liable for misuse of the information contained herein.

Diameter	26 mm
Length	57 mm

Environment

Standards	EN/IEC 61326-2-3 NSF ANSI 61
Product certifications	CE CULus RCM EAC
Ambient air temperature for operation	-30...85 °C
Ambient air temperature for storage	-50...100 °C
Vibration resistance	20 gn (f = 10...2000 Hz) conforming to EN/IEC 60068-2-6
Shock resistance	100 gn for 11 ms conforming to EN/IEC 60068-2-27
IP degree of protection	IP67 conforming to EN/IEC 60529 IP65 conforming to EN/IEC 60529

Dimensions

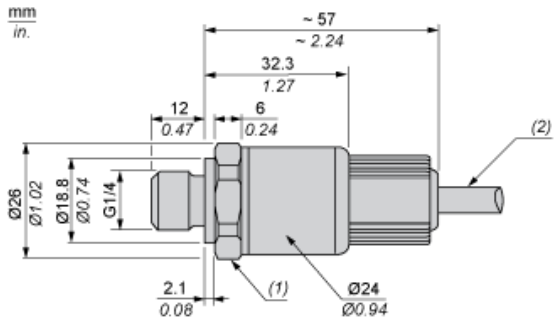

(1) SW24 tightening torque ≤ 25 N.m / 221 lb-in
(2) Cable

Connection and Schema

Wiring Diagram

3-Wire Technique (0-10 V)

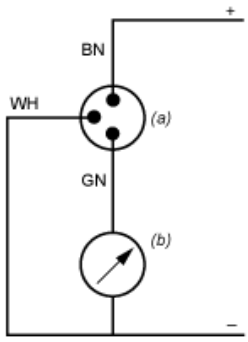

(a) PVC cable
(b) V out

Performance Curves

Curves

