210624
OGU 021 G3-T3
Fork light barrier

- 4 operating modes as an IO-Link parameter
- Switch-on/off delay as an IO-Link parameter
- Diagnostics with IO-Link
- Metal casing
- Sensitivity is adjustable
- High switching frequency
- Light/dark switching
- Bright ring LED
- High protection type



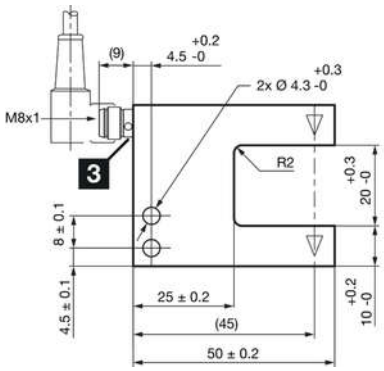

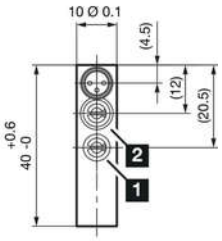

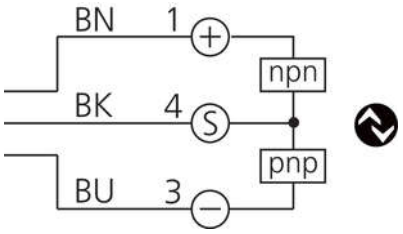

1) Potentiometer
2) NO/ NC
3) LED

BK: black
BN: brown
BU: blue

Function

Technical data (typ.)	+20°C, 24 V DC
Service voltage	10 … 30 V DC
No-load current (max.)	30 mA
Insulation voltage endurance	500 V
Leg length internal	25 mm
Housing dimensions	40 x 50 x 10 mm
Housing length	50 mm
Housing height	40 mm
Housing width	10 mm
Housing material	Die-cast zinc (Black, powder-coated)
Weight	48 g
Protection class	III, operation on protective low voltage
Approvals	UL
Operating principle	Optical
Evaluation	digital
Design	Fork
Operation modes	STANDARD, HIGH RESOLUTION, POWER, SPEED
Switching output	Push-pull, 100 mA, NO/NC, switchable
Interface	IO-Link (V1.1, COM2 38.4 kBd, Smart Sensor Profile)
Light source	LED
Color	Red
Modulation	Clocked
Fork opening	20 mm
Resolution (factory setting)	0.3 mm (STANDARD)

210624
OGU 021 G3-T3
Fork light barrier

Technical data (typ.)	+20°C, 24 V DC
Reproducibility (factory setting)	STANDARD
Resolution (STANDARD)	0.3 mm
Reproducibility (STANDARD)	0.02 mm
Resolution (HIGH RESOLUTION)	0.2 mm
Reproducibility (HIGH RESOLUTION)	0.02 mm
Resolution (POWER)	1 mm
Reproducibility (POWER)	0.02 mm
Resolution (SPEED)	0.3 mm
Reproducibility (SPEED)	0.02 mm
Sensitivity adjustment	Potentiometer or IO-Link
Switching frequency (factory setting)	5000 Hz (STANDARD)
Switching frequency (STANDARD)	5000 Hz
Switching frequency (HIGH RESOLUTION)	1500 Hz
Switching frequency (POWER)	250 Hz
Switching frequency (SPEED)	8000 Hz
Ambient temperature during operation	-25 … +60 °C
Protection type	IP 67
Connection	Connector, M8, 3-pin
Connection cable	TK …

More information / accessories	https://www.di-soric.com/210624

© di-soric . Right to change reserved