WORLD-BEAM® QS30 Series Sensors

High-power opposed-mode sensors

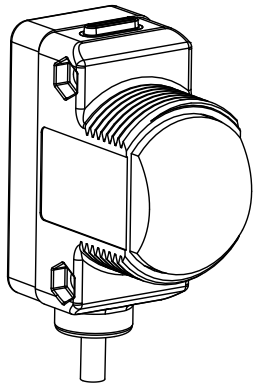

- Infrared beam with high excess gain — range over 213 m (700')
- Excellent noise immunity
- Excellent optical performance throughout the sensing range
- Easy two frequency selection to help prevent crosstalk, see Application Note on page 3
- Easy-to-read operating status indicators with bargraph display
- Bipolar discrete outputs, PNP and NPN
- Light Operate and Dark Operate models available
- Models available with 2 m or 9 m (6.5' or 30') cable or quick-disconnect fitting
- Tough ABS housing is rated IEC IP67; NEMA 6P; QD models are washdown tested to DIN 40050-9 (IP69K)
- Unique water/debris-shedding lens design reduces lens contamination; lens material survives impact, washdown and cleaning chemicals
- Encapsulated electronics
- Compact housing — mounting versatility via popular 30 mm threaded barrel or side-mount

CE

Excellent for applications where high sensing power is required due to long sensing range or contamination on lenses.

Models

Model	Cable*	Supply Voltage	Output Type
Emitters			
QS30EX	2 m (6.5') 5-wire Cable	10V dc to 30V dc	—
QS30EXQ	5-pin Euro-style QD		
Receivers			
QS30ARX	2 m (6.5') 5-wire Cable	10V dc to 30V dc	Bipolar NPN/PNP Light Operate
QS30ARXQ	5-pin Euro-style QD		
QS30RRX	2 m (6.5') 5-wire Cable		Bipolar NPN/PNP Dark Operate
QS30RRXQ	5-pin Euro-style QD		

* 9 m (30') cables are available by adding suffix **W/30** to the model number of any cabled sensor (for example, **QS30EX W/30**). A model with a QD connector requires a mating cable (see *Cordsets* on page 4).

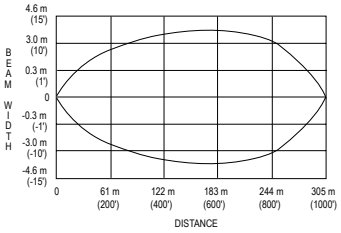

Figure 1. Beam Pattern

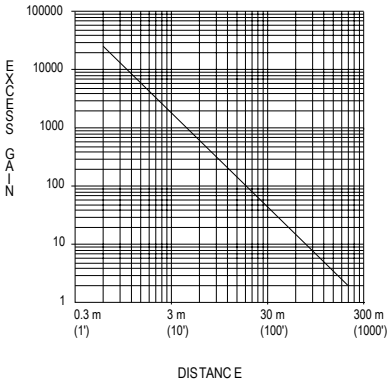

Figure 2. Excess Gain

WARNING: Not To Be Used for Personnel Protection

Never use this product as a sensing device for personnel protection. Doing so could lead to serious injury or death. This product does NOT include the self-checking redundant circuitry necessary to allow its use in personnel safety applications. A sensor failure or malfunction can cause either an energized or de-energized sensor output condition.

0 115011 7

Overview

Banner QS30 Series high-power opposed-mode sensors are extremely rugged, powerful and leakproof. They are designed to withstand the most demanding industrial applications, including high-pressure washdown areas. They are powerful enough to burn through heavy fog, dust, and most types of industrial and process contamination.

The sensor's electronics are epoxy-encapsulated for maximum resistance to mechanical shock and vibration. The popular WORLD-BEAM-style housing provides multiple mounting configurations in a minimum of space.

The innovative circuitry used in these sensors provides the best EMI/RFI noise immunity of any non-synchronized emitter/receiver pair. For applications where optical crosstalk between multiple sensor pairs may be a problem, the sensors provide a choice between two frequencies (A and B). (Each emitter must be set to the same frequency as its receiver, see *Sensor Alignment* on page 2.)

Light Operate and Dark Operate outputs are available, depending on the model. Each model has two outputs that switch simultaneously: one each NPN (sinking) and PNP (sourcing).

Additional configuration options are available; contact the factory for information about the following options:

- Additional modulation frequency choices (up to four)
- Modified sensor gain
- ON-delay or OFF-delay settings
- Fixed modulation frequency models

Each sensor has a green Power ON/OFF indicator and yellow indicators for the selected modulation frequency. In addition, receivers have a yellow LED that lights when the outputs are conducting, plus a 4-element light bar that indicates signal strength, relative to the switch point (the higher the number lit, the more light is received).

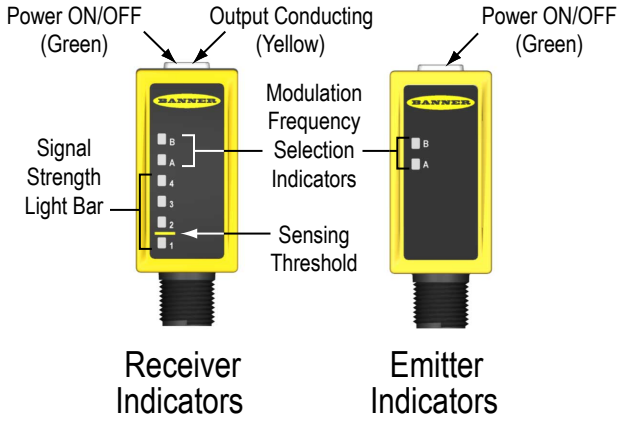

Figure 3. Receiver and Emitter Indicators

Sensor Configuration

The modulation frequency (A or B) is selected by the state of the gray wire (on cabled models; pin 5 on QD models – see hookups...). A "+" voltage or no connection selects frequency A; connecting it to "-" selects frequency B.

To disable (or inhibit) the emitter LED for testing the receiver, attach the white wire to "-" voltage.

Sensor Alignment

Adjust the emitter first, then the receiver. Verify that both sensors are wired for the same modulation frequency, then adjust the emitter's position until the receiver signal strength light bar indicates its highest amount of signal received (the highest number lit). Tighten the emitter mounting hardware, then repeat the process for the receiver.

To achieve the best crosstalk immunity, position a single matched emitter within the receiver's field of view (15 degrees). When it is necessary to position an alternate emitter in the receiver's field of view, sensor alignment is required to ensure the matched frequency emitter provides the stronger signal to its receiver, and the alternate frequency emitter does not reduce the signal strength of the receiver (as indicated by the 4-element signal strength light).

Specifications

Supply Voltage and Current
Emitter: 10 to 30V dc (10% maximum ripple) at less than 70 mA
Receiver: 10 to 30V dc (10% maximum ripple) at less than 22 mA (exclusive of load)

Beam
875 nm, infrared

Sensing Range
Excess gain of 2 at 213 m (700')

Output Configuration
Bipolar current sinking (NPN) white wire; current sourcing (PNP) black wire

Output Rating:
100 mA max
OFF-state leakage current: less than 200 µA
ON-state saturation voltage: less than 1.5V @ 100 mA, less than 900 millivolts at 10 mA
Protected against false power-up and continuous overload or short circuit of outputs

Output Response
30 milliseconds ON and 30 milliseconds OFF; 5 ms repeatability

Adjustments
Light Operate/Dark Operate — dependent on model selected
Frequency via gray wire

A: Gray (+)
B: Gray (-)

Emitter only: LED inhibit via white wire White (-) turns emitter LED OFF (to allow verification of sensor operation)

Indicators
Green LED: Power ON
Frequency indicator (A or B)
Receiver only:
Yellow LED: Output conducting
4-LED Signal Strength light bar

Environmental Rating
Cabled models: IP67, NEMA 6P
QD models: IP69K per DIN 40050-9

Construction
ABS plastic housing; impact-resistant lens material

Connection
5-wire cable (2 m or 9 m) or 5-pin integral Euro-style quick-disconnect fitting

Operating Conditions
Temperature: -20° to +60° C (-4° to +140° F)
Relative Humidity: 90%; non-condensing

Mounting Torque
Maximum 4.5 Nm (40 in lbs) with included 30 mm mounting nut

Certifications

Application Notes

1. When multiple sensors are used in close proximity (see Figure 1 for separation distance), position sensors such that the alternate frequency emitter is not within the receiver's field of view. Contact the Banner Application team for additional information.
2. Prolonged outdoor use in direct sunlight may cloud the lens. Contact Banner for other outdoor solutions.

Dimensions

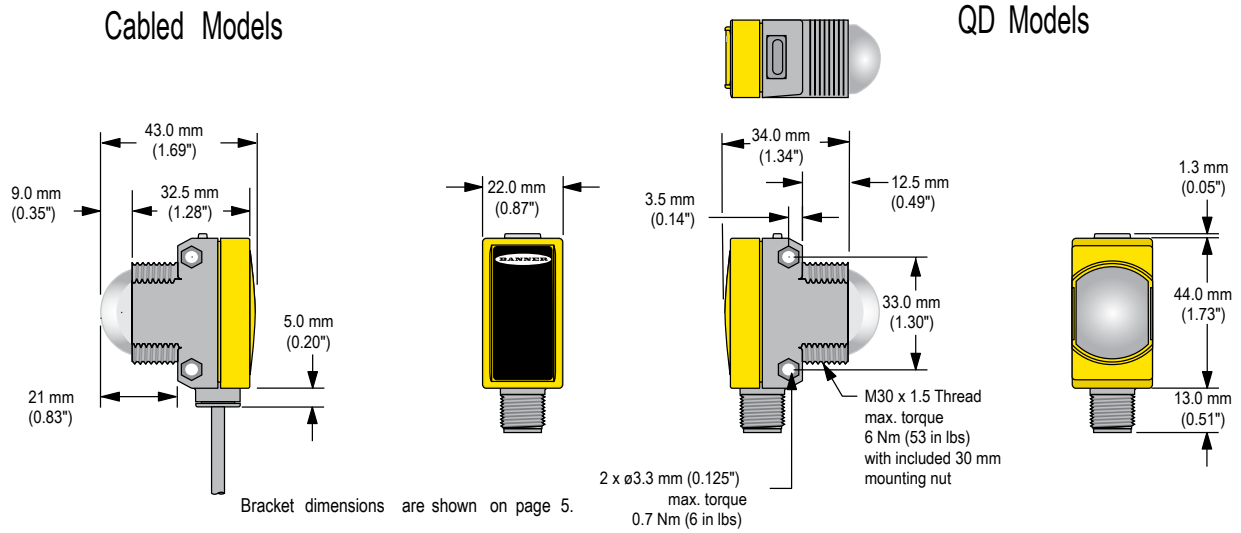

Bracket dimensions are shown on page 5.

Wiring

Emitter

Frequency A

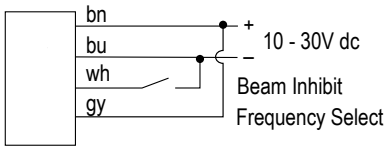

Frequency B

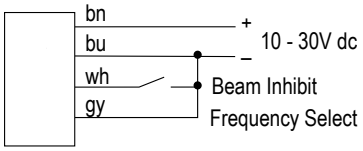

Receiver

Frequency A

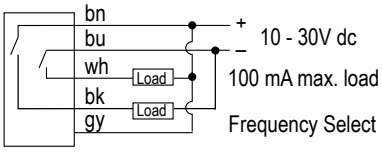

Frequency B

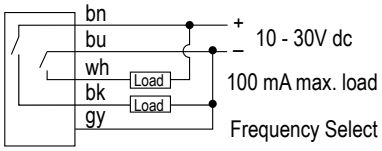

Accessories

Cordsets

Quick Disconnect		
5-Pin M12/Euro-Style Cordsets (straight connector) **MQDC1-506,** 2 m (6') **MQDC1-515,** 5 m (15') **MQDC1-530,** 9 m (30')	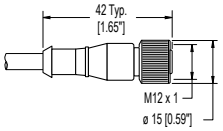	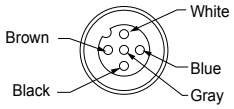
5-Pin M12/Euro-Style Cordsets (right-angle connector) **MQDC1-506RA,** 2 m (6') **MQDC1-515RA,** 5 m (15') **MQDC1-530RA,** 9 m (30')	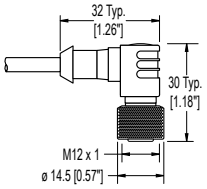	

Brackets

SMBQS30L	• 14-gauge, stainless steel right-angle bracket for cable models • Clearance for M4 (#8) hardware • ± 12° tilt adjustment	SMBQS30LT	• 14-gauge stainless steel for QD models with right-angle cables • Tall right-angle mounting bracket • ± 8° Tilt adjustment
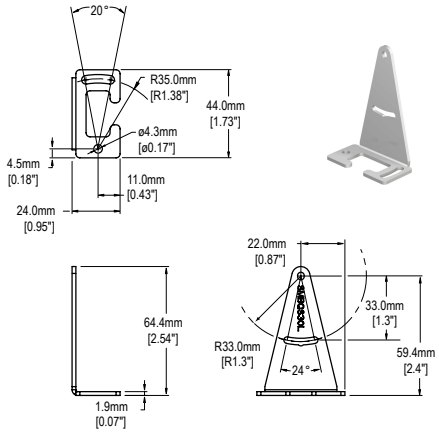		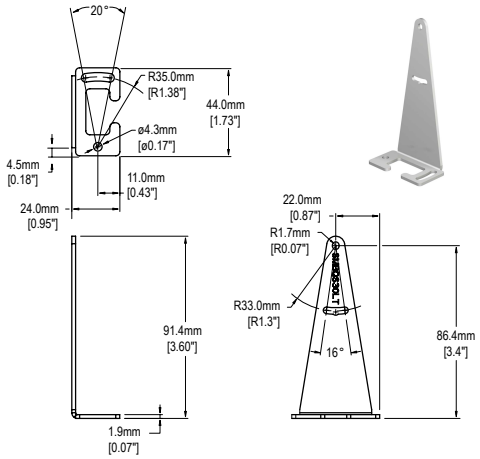	

SMBQS30Y	• Heavy-duty die-cast bracket • M18 vertical mounting option • ± 8° tilt adjustment with cabled units • Nuts and lockwasher included	SMB30SC	• 130 mm swivel bracket, barrel mount • Black reinforced thermoplastic polyester • Includes stainless steel mounting and swivel locking hardware
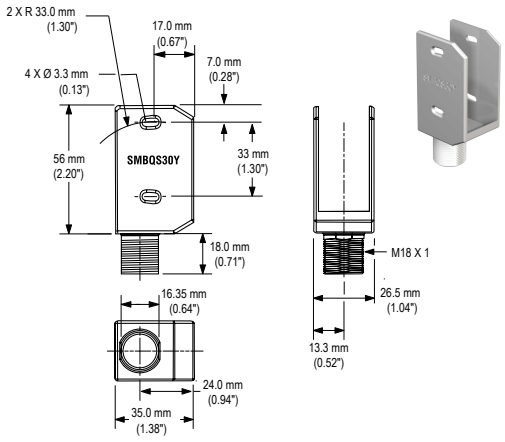		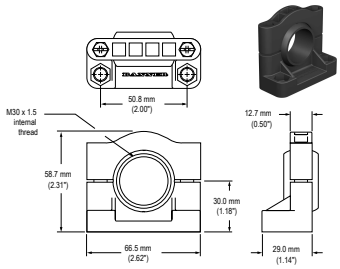	

Other Compatible Mounting Brackets (see Banner Photoelectric catalog or website for more information):

- SMB30MM
- SMB30A

Contact Us

For more information: Contact your local Banner representative or Banner Corporate Offices around the world.

Banner Corporate Headquarters
Banner Engineering Corp.
9714 Tenth Ave. North
Mpls., MN 55441
Tel: 763-544-3164
www.bannerengineering.com
sensors@bannerengineering.com

Asia — China
Banner Engineering China
Shanghai Rep Office
Rm. G/H/I, 28th Flr.
Cross Region Plaza
No. 899, Lingling Road
Shanghai 200030 CHINA
Tel: 86-21-54894500, Fax: 86-21-54894511
www.bannerengineering.com.cn
sensors@bannerengineering.com.cn

Europe
Banner Engineering Europe
Park Lane
Culliganlaan 2F
Diegem B-1831
BELGIUM
Tel: 32-2 456 07 80, Fax: 32-2 456 07 89
www.bannereurope.com
mail@bannereurope.com

Asia — Taiwan
Banner Engineering Taiwan
8F-2, No. 308
Section 1, Neihu Road
Taipei 114
Tel: 886-2-8751-9966, Fax: 886-2-8751-2966
www.bannerengineering.com.tw
info@bannerengineering.com.tw

Latin America
Contact Banner Engineering Corp. (US) or e-mail:
Mexico:*mexico@bannerengineering.com*
Brazil: *brasil@bannerengineering.com*

Asia — Japan
Banner Engineering Japan
Cent-Urban Building 305
3-23-15, Nishi-Nakajima
Yodogawa-Ku, Osaka
532-0011 JAPAN
Tel: 81-6-6309-0411, Fax: 81-6-6309-0416
www.bannerengineering.co.jp
mail@bannerengineering.co.jp

Asia — India
Banner Engineering India
Pune Head Quarters
Office No. 1001
Sai Capital Opp. ICC
Senapati Bapat Road
Pune 411016 INDIA
Tel: 91-20-66405624, Fax: 91-20-66405623
www.bannerengineering.co.in
india@bannerengineering.com

Banner Engineering Corp Limited Warranty

Banner Engineering Corp. warrants its products to be free from defects in material and workmanship for one year following the date of shipment. Banner Engineering Corp. will repair or replace, free of charge, any product of its manufacture which, at the time it is returned to the factory, is found to have been defective during the warranty period. This warranty does not cover damage or liability for misuse, abuse, or the improper application or installation of the Banner product.

THIS LIMITED WARRANTY IS EXCLUSIVE AND IN LIEU OF ALL OTHER WARRANTIES WHETHER EXPRESS OR IMPLIED (INCLUDING, WITHOUT LIMITATION, ANY WARRANTY OF MERCHANTABILITY OR FITNESS FOR A PARTICULAR PURPOSE), AND WHETHER ARISING UNDER COURSE OF PERFORMANCE, COURSE OF DEALING OR TRADE USAGE.

This Warranty is exclusive and limited to repair or, at the discretion of Banner Engineering Corp., replacement. **IN NO EVENT SHALL BANNER ENGINEERING CORP. BE LIABLE TO BUYER OR ANY OTHER PERSON OR ENTITY FOR ANY EXTRA COSTS, EXPENSES, LOSSES, LOSS OF PROFITS, OR ANY INCIDENTAL, CONSEQUENTIAL OR SPECIAL DAMAGES RESULTING FROM ANY PRODUCT DEFECT OR FROM THE USE OR INABILITY TO USE THE PRODUCT, WHETHER ARISING IN CONTRACT OR WARRANTY, STATUTE, TORT, STRICT LIABILITY, NEGLIGENCE, OR OTHERWISE.**

Banner Engineering Corp. reserves the right to change, modify or improve the design of the product without assuming any obligations or liabilities relating to any product previously manufactured by Banner Engineering Corp.