SGD 24-M

PanelPilot Compatible Smart Graphics Display

Features

- 2.4” colour TFT screen
- Use PanelPilot software, to setup and customise the display. Compatible with Windows 7, 8.1 and 10
- Multiple voltmeter configurations included free
- Programmable via the USB interface
- Simple panel mounting solution
- Wide operating voltage of 4V – 30V d.c.
- Measures voltage from 0 – 40V d.c.
- Digital hold



The SGD 24-M is a PanelPilot Compatible graphics display with a 320 x 240 pixel (QVGA) colour display and USB programming interface. Using the PanelPilot software (available for Windows 7, 8.1 and 10), users are able to choose from an ever-increasing number of voltmeter types (six at launch) which can then be customised to their needs. Colours, text labels, splash screen and input voltage scaling can all be customised by the user through the software and then uploaded to the SGD 24-M through the USB connection.

Panel or enclosure installation of the display is simple, using a panel fixing clip to mount the display, and 4 screw terminals to connect the inputs.

Specifications

	Minimum	Typical	Maximum	Unit
Accuracy		0.05	0.1	%
Linearity			±1*	Count
Sample rate		3		Samples / second
Operating temperature range	0 (+32)		+40 (+104)	°C (°F)
Supply voltage	4		30	V d.c.
Measurement voltage (single ended only)**	0		40	V d.c.
Supply current ***	35		190	mA

* Depending on user calibration settings

** The SGD 24-M uses a programmable gain amplifier. There are 8 different voltage ranges, to optimise the resolution. See page 2 for details.

*** Voltage dependent. See graph on Page 2.

Ordering Information

Standard Display (Panel meter, fixing kit, quick start guide)	**SGD 24-M**
USB Cable (Type A to mini-B)	**CABLE USB A-MF**

SGD 24-M

PanelPilot Compatible
Smart Graphics Display

Hardware

Screw Terminal Functions

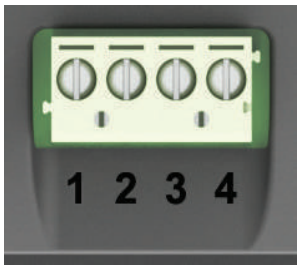

1	IN2	Analogue voltage input 2 (maximum of 40V d.c.)
2	IN1	Analogue voltage input 1 (maximum of 40V d.c.)
3	0V	0V power supply input
4	V+	Positive power supply input (4V – 30V d.c.)

Typical Supply Current

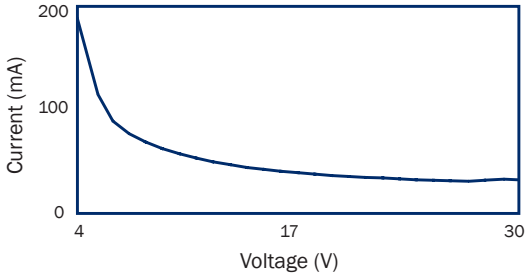

Voltage Input

The SGD 24-M features 2 voltage inputs, which use a Programmable Gain Amplifier (PGA) to make the best use of available resolution (the smallest voltage range offers the highest resolution). Each channel can be programmed independently, with the option of eight different input voltage ranges:

Voltage Range (V)	Resolution (mV)
0 - 1.25	0.3
0 - 2.5	0.6
0 - 4	1.0
0 - 5	1.2
0 - 8	2.0
0 - 10	2.4
0 - 20	4.9
0 - 40	9.8

The input voltage range is decided using the two voltages that the user enters in the scaling section of the Panel Pilot software. The software uses the smallest range available, which can accommodate both of the voltages entered by the user. The absolute maximum voltage input is 40V d.c. For example:

Entering a voltage scale of 0 – 30V in the software will use the 0 – 40V range.
Entering a voltage scale of 0 – 3V in the software will use the 0 – 4V range.
Entering a voltage scale of 5 – 15V in the software will use the 0 – 20V range.

Note: V+, IN1 and IN2 share a common ground (i.e. not floating or isolated from each other).

USB connection

A ‘Type A to Mini-B’ USB cable is required to program and customise the SGD 24-M. It typically takes 10 seconds to send a configuration, with an additional 5 seconds needed for the hardware to reset.

The SGD 24-M can be powered directly from USB and is compatible with both USB 1.1 and USB 2.0. The screw terminals and advanced connector can remain connected whilst using USB, but it is not necessary for V+ to be powered.

SGD 24-M

PanelPilot Compatible
Smart Graphics Display

Display

The display is a 2.4” TFT panel, with a resolution of 320 x 240 pixels and a 16-bit color depth. Any graphics that are uploaded to the meter are automatically converted to this specification. A resistive touchscreen is fitted, for use with supporting applications. Clean the screen with a damp, soft, lint free cloth.

Panel Mounting

The SGD 24-M can be fitted into panels of up to 3mm deep. A silicone seal is included to improve fitting on thin panels, however the maximum panel thickness is reduced to 2mm when fitted. Panel cut-out is 74 x 46mm.

Note: The display is NOT protected against moisture or dust.

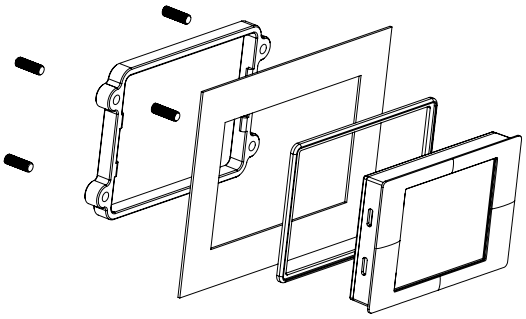

Advanced Connector

The DIL IDC socket provides an alternative connection method to the screw-teminals (V+, 0V, IN1 and IN2 are duplicated). It also includes provision for future expansion using data buses (SPI and I2C) and alarm ouputs.
Some expansion options may require an additional interface board - Visit www.panelpilot.com for information on which features are currently supported.

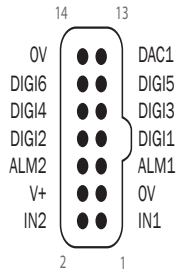

Dimensions

All dimensions in mm (inches)

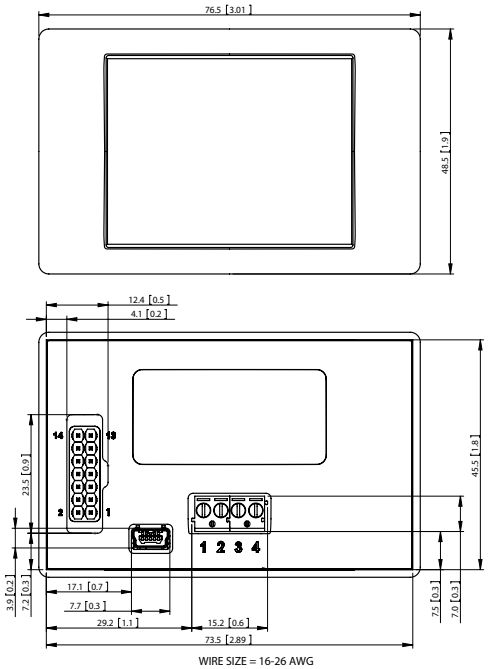

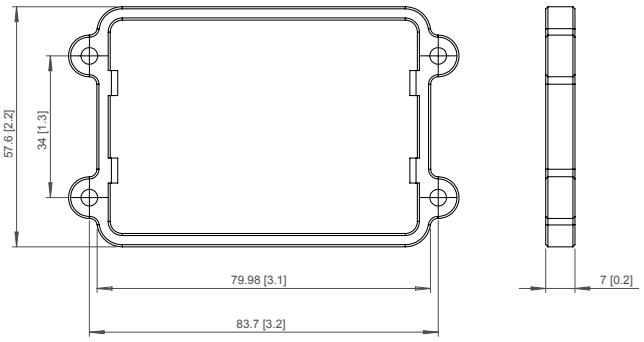

Panel Cut-out: 74 x 46 (2.91 x 1.81)
Viewing Area: 49.5 x 38 (1.9 x 1.5)

SGD 24-M

PanelPilot Compatible Smart Graphics Display

PanelPilot Software

Lascar's PanelPilot software is available for download free of charge from www.PanelPilot.com. Easy to install and use, the control software runs under Windows 7, 8.1 and 10. The software is used to setup the appearance and operation of the meter and then upload these settings to the meter. Multiple types of voltmeter are supplied with the software, see the website for details.

The software allows the following parameters to be configured:

- Meter type
- Text labels (including units and graph labels)
- Background, graph segment and text colors
- Input scaling / calibration (at two points)
- Decimal points (entered during scaling)
- Splashscreen image selection (to display a user image, such as a logo, when the meter is powered up)

Various Operating Modes

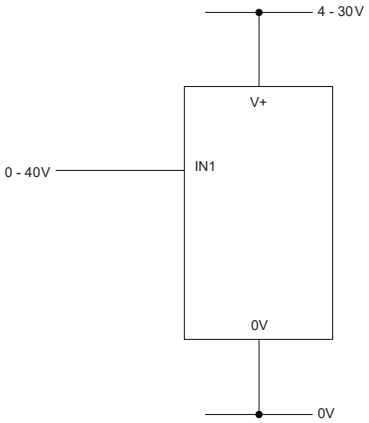

MEASURING A VOLTAGE SOURCE

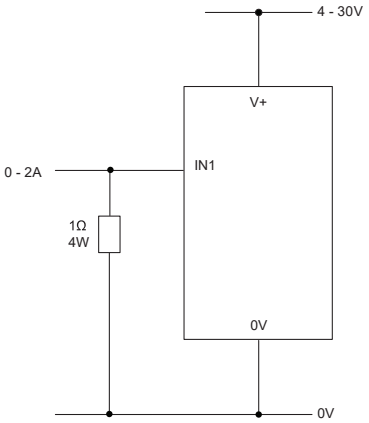

MEASURING 0-2 AMPS CURRENT RANGE

Use a 1 Ω resistor, with a 4W rating.
Setup scaling in software: 0V = 0.00 and 2V = 2.00

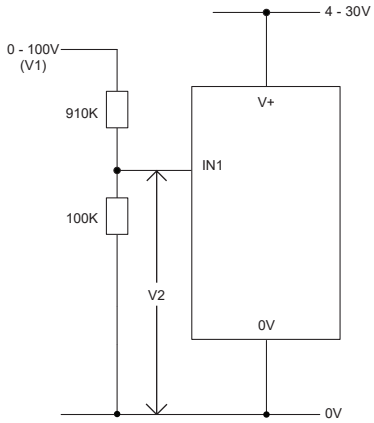

MEASURING 0-100V (d.c. only)

Input a known voltage of between 0 and 100V (V1)
Measure the voltage between IN1 and 0V (V2)
Setup scaling in software: 0V = 0.0
V2 = V1 (Enter with the same number of decimal points, i.e 50.0)

SGD 24-M

PanelPilot Compatible
Smart Graphics Display

Various Operating Modes

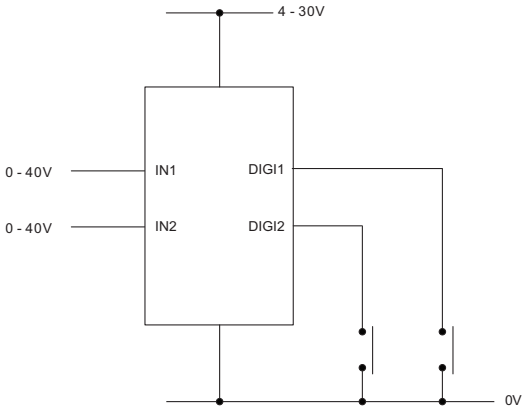

DIGITAL HOLD

DIGI1 will hold the display for IN1
DIGI2 will hold the display for IN2

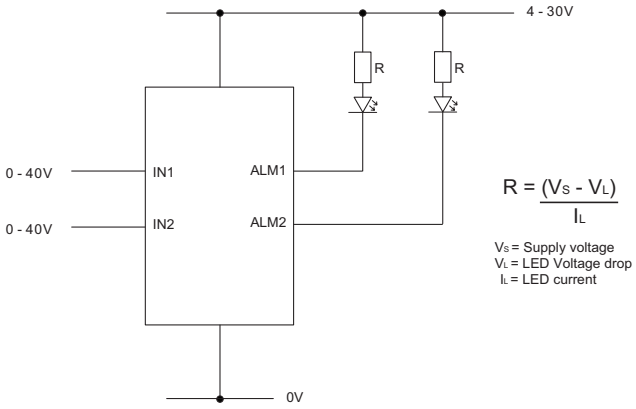

ALARM OUTPUTS

Applications that feature an alarm can be connected as above.
ALM1 and ALM2 must not sink more than 10mA maximum each.
If supply voltage varies, use an appropriate voltage regulator.

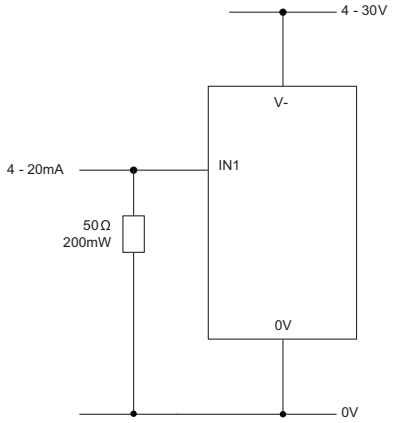

MEASURING 4-20mA

Use a 50 Ω resistor with a 200mW rating.
Setup scaling in software 0.2V=4.0 and 1V=20.0
Cannot be loop powered. Supply must be isolated from current loop.