

Switch pos. query, 2 pos., LED-R, front

Part no. **M22-SWD-K11LED-R**

Article no. **115975**

Powering Business Worldwide

Delivery programme

Basic function			Function elements
Function			for combination with RMQ-Titan operating elements M22-...
Fixing			Front fixing
Contacts			1 changeover contact
Contact sequence			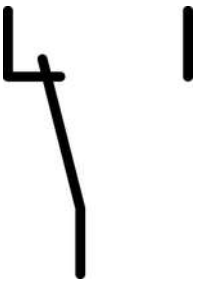
Contact travel diagram stroke in connection with front element			
Configuration			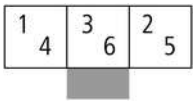
Colour			
			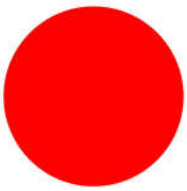
Connection to SmartWire-DT			yes

Approbationen

UL approval	Yes
CSA approval	Yes
UL File No.	E29184
UL CCN	NKCR
CSA File No.	2324643
CSA Class No.	3211-07
NA Certification	UL listed, CSA certified
Specially designed for NA	No

General

Standards			IEC/EN 61131-2 EN 50178
Dimensions (W x H x D)		mm	12 x 42 x 45
Weight		g	10
Mounting position			As required

Ambient conditions, mechanical

Protection type (IEC/EN 60529, EN50178, VBG 4)			IP20
Vibrations (IEC/EN 61131-2:2008)			
Constant amplitude 3,5 mm		Hz	5 - 8.4
Constant acceleration 1 g		Hz	8.4 - 150

Mechanical shock resistance (IEC/EN 60068-2-27) semi-sinusoidal 15 g/11 ms		Impacts	9
Drop to IEC/EN 60068-2-31	Drop height	mm	50
Free fall, packaged (IEC/EN 60068-2-32)		m	0.3

Electromagnetic compatibility (EMC)

Overvoltage category			Not applicable
Pollution degree			2
Electrostatic discharge (IEC/EN 61131-2:2008)			
Air discharge (Level 3)		kV	8
Contact discharge (Level 2)		kV	4
Electromagnetic fields (IEC/EN 61131-2:2008)			
80 - 1000 MHz		V/m	10
1.4 - 2 GHz		V/m	3
2 - 2.7 GHz		V/m	1
Radio interference suppression (SmartWire-DT)			EN 55011 Class A
Burst (IEC/EN 61131-2:2008, Level 3)			
Supply cables		kV	2
SmartWire-DT cables		kV	1
Radiated RFI (IEC/EN 61131-2:2008, Level 3)		V	10

Climatic environmental conditions

Operating ambient temperature (IEC 60068-2)		°C	- 30 - + 55
Condensation			Take appropriate measures to prevent condensation
Storage		°C	- 40 - 80
relative humidity, non-condensing (IEC/EN 60068-2-30)		%	9 … 95

SmartWire-DT network

Station type			SmartWire-DT slave
Address allocation			automatic
Status indication		LED	Green
Connections			Plug, 8-pole
Plug connectors			**SWD4-8SF2-5**

Fieldbus interface

Baud rate setting			automatic

Technische Daten nach ETIM 4.0

Suitable for earth leakage circuit breaker			No
Type of electric connection			Blade terminal
Rated operation current Ie at AC-15, 230 V		A	0
Mounting type			Front mount
Suitable for pendant switch			No
Suitable for front element			YES
Suitable for circuit-breakers			No
Suitable for safety position switches			No
Suitable for step switches			No
Suitable for pressure switch/selector switch actuator			YES
Suitable for cam switches			No
Suitable for motor protective circuit breakers			No
Suitable for series-mounting relays			No
Suitable for solenoid			No
Suitable for compact switch-disconnector			No
Suitable for miniature circuit-breakers			No
Suitable for pulse relay			No
Suitable for contactor relay relay			No
Suitable for pendant pushbutton			No
Suitable for residual current device			No
Number of contacts as change-over contact			0
Number of contacts as N/O			1

Number of contacts as NC			1
Suitable for impulse relays			No
Suitable for position switches			No
Suitable for switch-disconnector/residual current device			No
Suitable for contactors			No
Suitable for installation contactor / installation relay			No

Dimensions

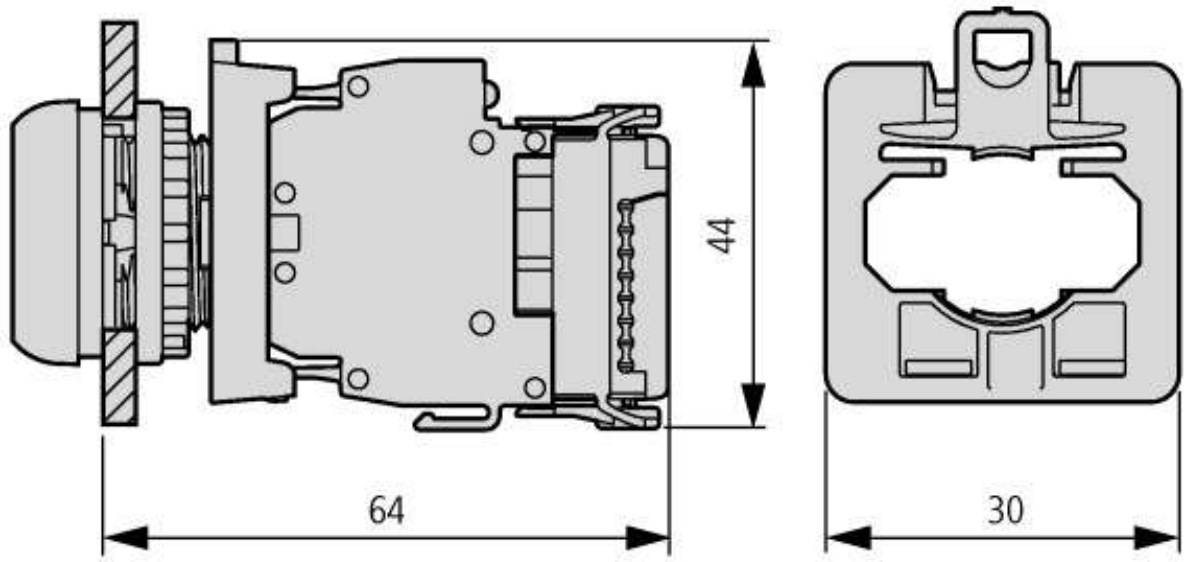

Pushbutton with function element

Additional product information (links)

IL04716004Z (AWA1160-2511) SmartWire-DT: RMQ-Titan	
IL04716004Z (AWA1160-2511) SmartWire-DT: RMQ-Titan	ftp://ftp.moeller.net/DOCUMENTATION/AWA_INSTRUCTIONS/IL04716004Z2010_10.pdf
MN05006001Z-EN(AWB2723-1613) SmartWire-DT, Unit	
MN05006001Z-DE (AWB2723-1613) SWD-Teilnehmer - Deutsch	ftp://ftp.moeller.net/DOCUMENTATION/AWB_MANUALS/MN05006001Z_DE.pdf
MN05006001Z-EN(AWB2723-1613) SmartWire-DT, Unit - English	ftp://ftp.moeller.net/DOCUMENTATION/AWB_MANUALS/MN05006001Z_EN.pdf
MN05006001Z-IT (AWB2723-1613) SmartWire-Darwin utenti - italiano	ftp://ftp.moeller.net/DOCUMENTATION/AWB_MANUALS/MN05006001Z_IT.pdf

© 11/2009 by Eaton Industries GmbH