E33228

Process adapter Varivent

ADAPT IFM-VARIV TYP F (D=50)3A

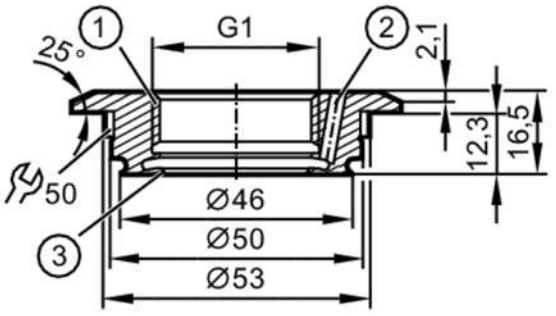

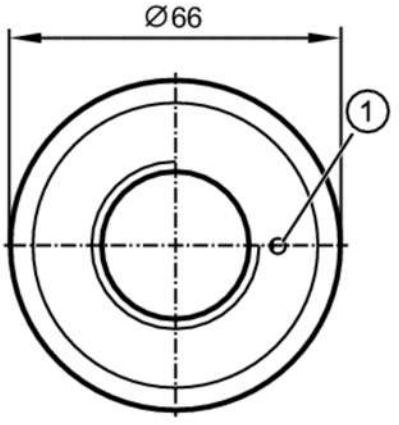

1 Aseptoflex Vario
2 Leakage port
3 sealing area

EC 1935/2004 EHEDG Certified FDA

Application		
Design		with leakage port
Pressure rating	[bar]	25
Tests / approvals		
Pressure Equipment Directive		A possible classification to PED depends on the application and has to be carried out by the user / operator.
Pressure Equipment Directive EAC		The adapter is intended for use in devices, machines and installations that do not fall under the categories of the technical rule TR CU 032/2013.
Safety instructions		The compatibility between medium and product material has to be checked in all applications.
Mechanical data		
Weight	[g]	225
Materials (wetted parts)		stainless steel (1.4435 / 316L) ; surface characteristics : Ra<0,4 / Rz 4
Sensor connection		G 1 Aseptoflex Vario
Process connection		Varivent Form F, DN25 (1"), Ø 50 mm
Sealing		Gasket
Hygienic equipment class to DIN 11866		H4
Accessories		
Items supplied		O-ring: 1 x 24 x 2, EPDM, FDA compliant, E30054

E33228

Process adapter Varivent

ADAPT IFM-VARIV TYP F (D=50)3A

Accessories (optional)	O-ring: 1 x 24 x 2, FKM, FDA compliant, E30123
	sealing ring: 1, PEEK, FDA compliant, E30124

Remarks	
Pack quantity	1 pcs.