efector300

SN0150

VS3000/85...265VAC

Evaluation systems

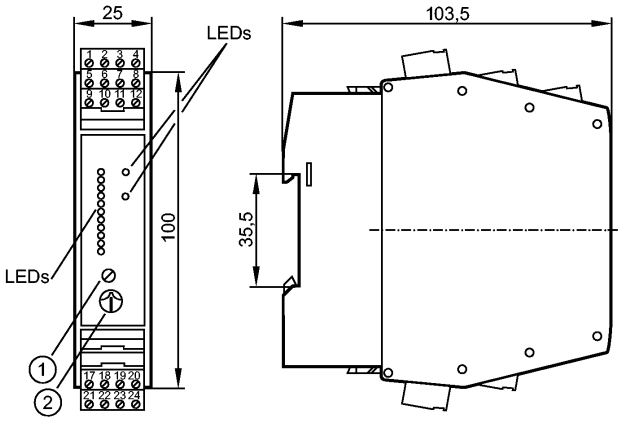

1: Potentiometer (switch point flow)
2: Potentiometer (switch point temperature)

Made in Germany

Product characteristics		
Control monitor for flow sensors		
Mounting on DIN rail		
Electrical connection by means of Combicon connectors with screw terminals (fitted)		
Connection: 1 sensor		
Application		
Application		flow, temperature and wire break monitoring
Electrical data		
Electrical design		AC
Nominal voltage	[V]	90...240 AC (47...63 Hz)
Voltage tolerance	[%]	-5 /+10
Power consumption	[VA]	4
Protection class		II
Reverse polarity protection		no
Outputs		
Output function		relay
Switching function		
- Flow monitoring		relay energised when flow is present and during the power-on delay time
- Temperature monitoring		relay energised when temperature is exceeded
- Wire break monitoring		relay de-energised in case of wire break or short circuit
Contact rating		4 A (250 V AC / 30 V DC)
Short-circuit proof		no
Overload protection		no
Undervoltage monitoring		In case of undervoltage all relays are de-energised, the LED "LOW VOLTAGE/WIRE BREAK-RELAY" lights
Reaction times		
Power-on delay time	[s]	10...80 *)
Response time	[s]	max. 3
Software / programming		
Adjustment of the switch point		potentiometer
Selection liquids / gases		link terminals 23-24 **)

SN0150

VS3000/85...265VAC

Switch point setting		potentiometer
Temperature range		0...80
Repeatability switch point / measured value	[K]	± 4
Environment		
Ambient temperature	[°C]	-20...60, in case of sufficient free space for convection cooling
Protection		IP 20
Tests / approvals		
MTTF	[Years]	168
Mechanical data		
Housing materials		PBT
Weight	[kg]	0.251
Displays / operating elements		
Function display		11 LED
Output status indication	LED	red
Output status indication	LED	red
Electrical connection		
Connection		Combicon connector

Wiring

Core colours

BN	brown
BU	blue
BK	black
WH	white
GY	grey

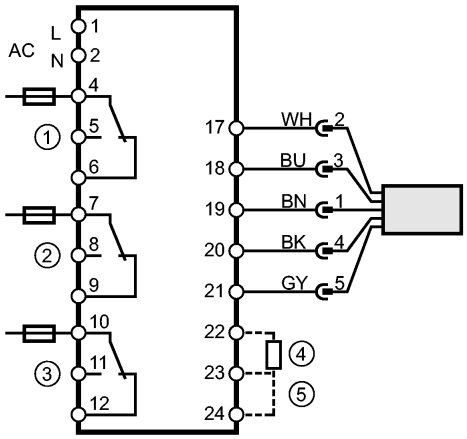

1 = Flow monitoring
2 = Wire break monitoring
3 = Temperature monitoring
4 = Power-on delay time
5 = Selection liquid / gas
Note: miniature fuse to IEC60127-2 sheet 1,
≤ 5 A (fast acting)

Remarks

Remarks	*) adjustable (fixed-value resistors terminals 22-23) **) Factory setting: Monitoring of liquids. For monitoring of gases: Link terminals 23 / 24. Recommendation: check the unit for reliable function after a short circuit.
Pack quantity [piece]	1