Foot-switch
Series F1

Description **F1-U1Z UN**	Article number **6061600006**

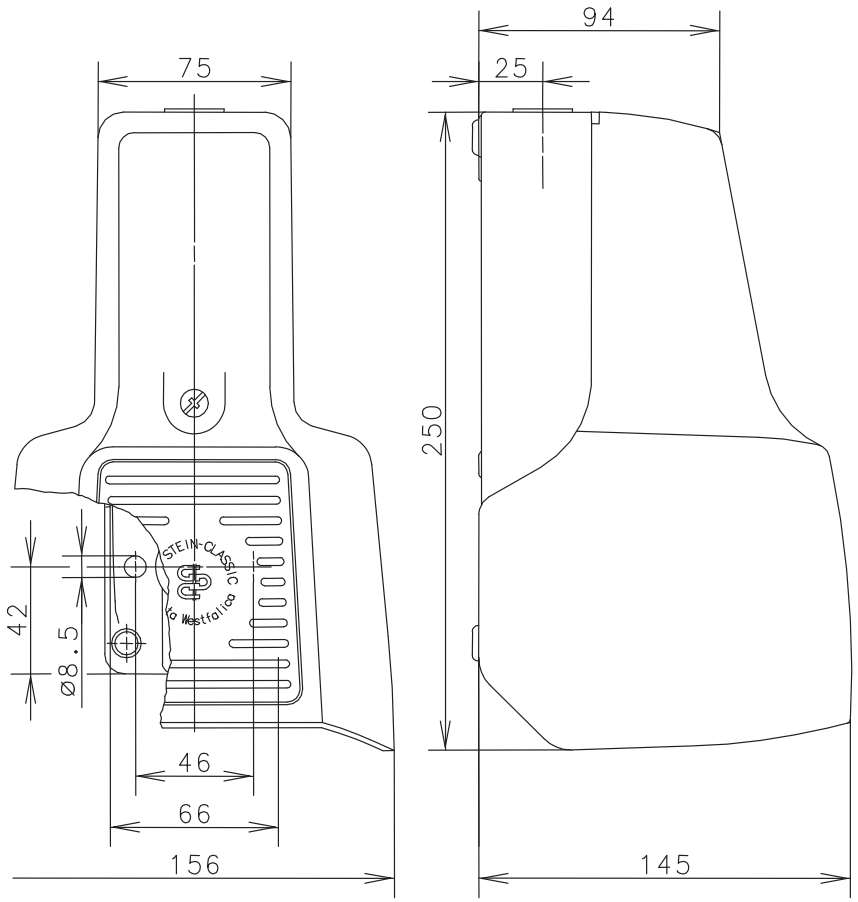

Operating symbol

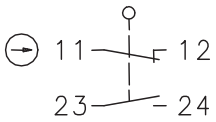

Electrical data		
Rated insulation voltage	U_i	400 V AC
Conv. thermal current	I_{the}	10 A
Rated operational voltage	U_e	240 V
Utilization category		AC-15, U_e 240 V /I_e 3 A, U_i 400 V
Direct opening action	⊖	acc. to IEC/EN 60947-5-1, Annex K (pedal stop)
Short-circuit protective device		Fuse 10 A gG
Protection class		I

BERNSTEIN AG . Tieloser Weg 6 . 32457 Porta Westfalica . www.bernstein.eu

This document will not become the contractual basis; the details included herein do not constitute any descriptions of expected conditions, so that warranties/ claims for defects on account of possible variations of the actual qualities from the qualities described herein are explicitly excluded.

All rights reserved. Specifications subject to change without notice!

Mechanical Data	
Enclosure	AL
Protective guard (Accident protection cover UN)	AL
Actuator	Foot lever (PA)
Ambient air temperature	–30 °C … +80 °C
Contact type	1 N.C. / 1 N.O. (Zb)
Operating force	≈ 10 N (pedal centre)
Mechanical life	10 x 10^6 switching cycles
Switching frequency	≤ 50/min
Assembly	2 x M8
Connection	Screw connections (M3,5)
Number of connections	4
Protection ground	2 x M4
Conductor cross-sections	Solid: 0,5 ... 1,5 mm^2 Litz wire with ferrules: 0,5 ... 1,5 mm^2
Cable entry size	1 x M20 x 1,5
Weight including protective guard	≈ 1,5 kg
Protection type	IP 65 acc. to IEC/EN 60529

ID for safety engineering	
B10d	20 x 10^6 switching cycles

Standards	
	VDE 0660 T100, DIN EN 60947-1, IEC 60947-1
	VDE 0660 T200, DIN EN 60947-5-1, IEC 60947-5-1
	DIN EN ISO 13849-1

EU Conformity	
	acc. to directive 2006/42/EC

Approvals	
	DGUV
	$_{c}CSA_{US}$ A300 (same polarity)
	CCC

Notes
Tapped holes not in use must be closed with blind plugs. The degree of protection (IP code) specified applies only to a properly closed accident protection cover and in connection with the appropriate cable glands or blind plugs.

This document will not become the contractual basis; the details included herein do not constitute any descriptions of expected conditions, so that warranties/ claims for defects on account of possible variations of the actual qualities from the qualities described herein are explicitly excluded.

All rights reserved. Specifications subject to change without notice!