# Technical data sheet
# Diffuse sensor with background suppression
Part no.: 50131551
HT46CI.SL/4P-M12




For Illustration purposes only

**Contents**


- Technical data
- Dimensioned drawings
- Electrical connection
- Diagrams
- Operation and display
- Part number code
- Notes
- Further information
- Accessories

# Technical data

Leuze

## Basic data

| | |
|---|---|
| **Series** | 46C |
| **Operating principle** | Diffuse reflection principle with background suppression |
| **Application** | Object detection between the rollers of a roller conveyor |

## Special version

| | |
|---|---|
| **Special version** | Small light spot (S) |

## Optical data

| | |
|---|---|
| **Black-white error** | < 10% up to 800 mm |
| **Operating range** | Guaranteed operating range |
| **Operating range, white 90%** | 0.01 ... 1.2 m |
| **Operating range, gray 18%** | 0.015 ... 1 m |
| **Operating range, black 6%** | 0.02 ... 0.8 m |
| **Operating range limit** | 0.01 ... 1.2 m |
| **Operating range limit** | Typical operating range |
| **Adjustment range** | 120 ... 1,200 mm |
| **Beam path** | Focused |
| **Light source** | LED, Infrared |
| **Wavelength** | 860 nm |
| **Transmitted-signal shape** | Pulsed |
| **LED group** | Exempt group (in acc. with EN 62471) |
| **Type of light spot geometry** | Rectangular |
| **Focus** | Fixed |

## Electrical data

| | |
|---|---|
| **Protective circuit** | Polarity reversal protection |
| | Short circuit protected |
| | Transient protection |

### Performance data

| | |
|---|---|
| **Supply voltage $U_B$** | 10 ... 30 V, DC, Incl. residual ripple |
| **Residual ripple** | 0 ... 15 %, From $U_B$ |
| **Open-circuit current** | 0 ... 30 mA |

### Outputs

| | |
|---|---|
| **Number of digital switching outputs** | 2 Piece(s) |

#### Switching outputs

| | |
|---|---|
| **Voltage type** | DC |
| **Switching current, max.** | 100 mA |
| **Switching voltage** | high: ≥($U_B$-2V) |
| | low: ≤ 2 V |

##### Switching output 1

| | |
|---|---|
| **Assignment** | Connection 1, pin 4 |
| **Switching element** | Transistor, PNP |
| **Switching principle** | Light switching |

##### Switching output 2

| | |
|---|---|
| **Assignment** | Connection 1, pin 2 |
| **Switching element** | Transistor, PNP |
| **Switching principle** | Dark switching |

## Time behavior

| | |
|---|---|
| **Switching frequency** | 250 Hz |
| **Response time** | 2 ms |
| **Readiness delay** | 300 ms |

### Connection 1

| | |
|---|---|
| **Function** | Signal OUT |
| | Voltage supply |
| **Type of connection** | Connector |
| **Thread size** | M12 |
| **Type** | Male |
| **Material** | Plastic |
| **No. of pins** | 4 -pin |
| **Encoding** | A-coded |

## Mechanical data

| | |
|---|---|
| **Dimension (W x H x L)** | 20.5 mm x 76.3 mm x 44 mm |
| **Housing material** | Plastic |
| **Plastic housing** | PC-PBT |
| **Lens cover material** | Plastic / PMMA |
| **Net weight** | 60 g |
| **Housing color** | Red |
| **Type of fastening** | Through-hole mounting |
| | Via optional mounting device |
| **Compatibility of materials** | ECOLAB |

## Operation and display

| | |
|---|---|
| **Type of display** | LED |
| **Number of LEDs** | 2 Piece(s) |
| **Operational controls** | Multiturn potentiometer |
| **Function of the operational control** | Range adjustment |

## Environmental data

| | |
|---|---|
| **Ambient temperature, operation** | -40 ... 60 °C |
| **Ambient temperature, storage** | -40 ... 70 °C |

## Certifications

| | |
|---|---|
| **Degree of protection** | IP 67 |
| | IP 69K |
| **Protection class** | III |
| **Approvals** | c UL US |
| **Standards applied** | IEC 60947-5-2 |

## Classification

| | |
|---|---|
| **Customs tariff number** | 85365019 |
| **ECLASS 5.1.4** | 27270904 |
| **ECLASS 8.0** | 27270904 |
| **ECLASS 9.0** | 27270904 |
| **ECLASS 10.0** | 27270904 |
| **ECLASS 11.0** | 27270904 |
| **ECLASS 12.0** | 27270903 |
| **ECLASS 13.0** | 27270903 |
| **ECLASS 14.0** | 27270903 |
| **ECLASS 15.0** | 27270903 |
| **ETIM 5.0** | EC002719 |
| **ETIM 6.0** | EC002719 |
| **ETIM 7.0** | EC002719 |
| **ETIM 8.0** | EC002719 |
| **ETIM 9.0** | EC002719 |
| **ETIM 10.0** | EC002719 |

# Dimensioned drawings

All dimensions in millimeters

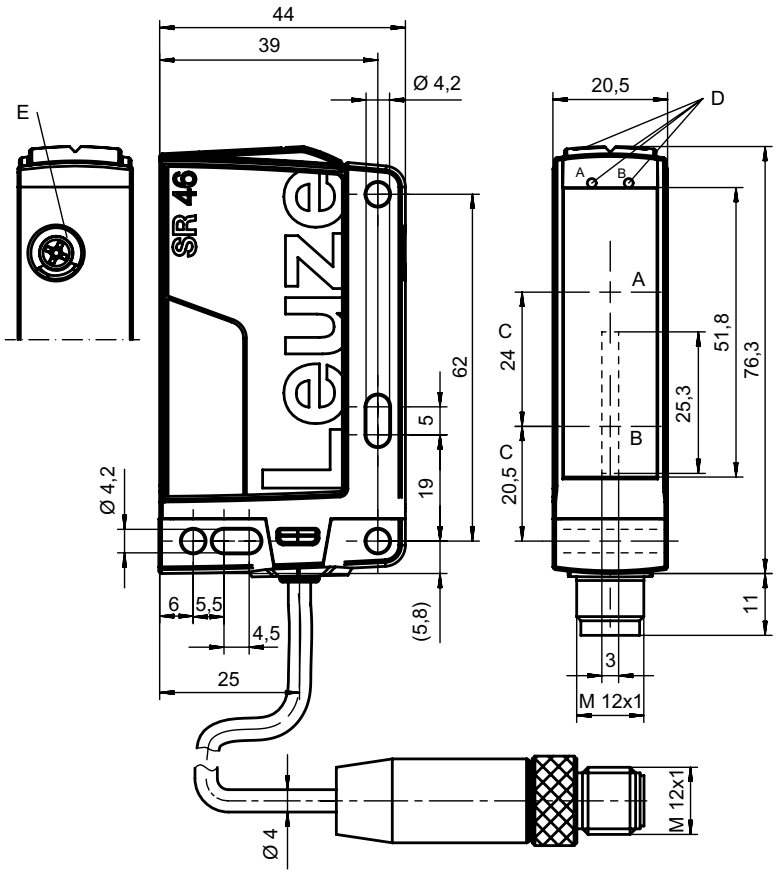


A Receiver
B Yellow LED
C Optical axis
DA Green LED
DB Yellow LED
E Multiturn potentiometer

# Electrical connection

## Connection 1

| | |
|---|---|
| **Function** | Signal OUT |
| | Voltage supply |
| **Type of connection** | Connector |
| **Thread size** | M12 |
| **Type** | Male |
| **Material** | Plastic |
| **No. of pins** | 4 -pin |
| **Encoding** | A-coded |

| Pin | Pin assignment |
|---|---|
| **1** | V+ |
| **2** | OUT 2 |
| **3** | GND |
| **4** | OUT 1 |

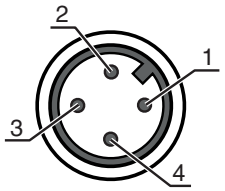

# Diagrams

## Typ. response behavior

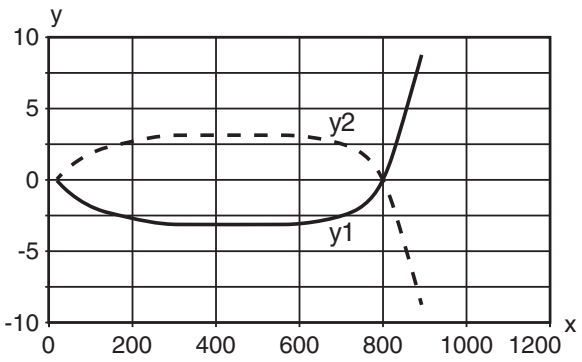


x Distance [mm]
y Misalignment [mm]

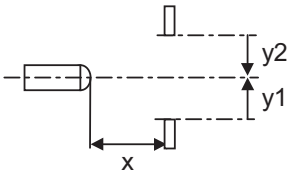


## Typ. black/white behavior

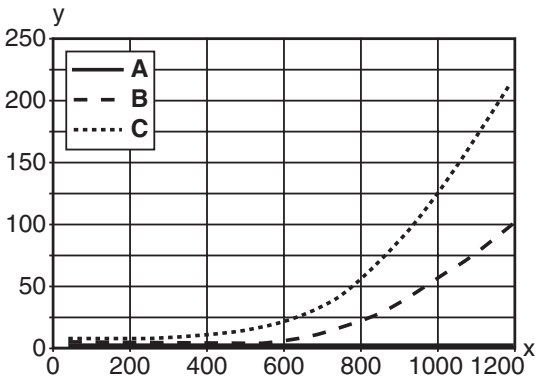


x Range [mm]
y Reduction of range [mm]

A White 90%
B Gray 18%
C Black 6%

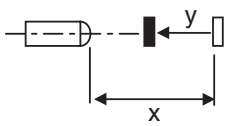


# Operation and display

| LED | Display | Meaning |
|---|---|---|
| 1 | Green, continuous light | Operational readiness |
| 2 | Yellow, continuous light | Reflection |

# Part number code

Part designation: **AAA46C d EE-f.GG H/i J-K**

| | |
|---|---|
| **AAA46C** | **Operating principle / construction**<br>HT46C: Diffuse reflection sensor with background suppression<br>LS46C: Throughbeam photoelectric sensor transmitter<br>LE46C: Throughbeam photoelectric sensor receiver<br>PRK46C: Retro-reflective photoelectric sensor with polarization filter<br>RK46C: Retro-reflective photoelectric sensor |
| **d** | **Light type**<br>n/a: red light<br>I: infrared light |
| **EE** | **Light source**<br>n/a: LED<br>L1: laser class 1<br>L2: laser class 2 |
| **f** | **Preset range (optional)**<br>n/a: operating range acc. to data sheet<br>xxxF: Preset range [mm] |
| **GG** | **Equipment**<br>n/a: standard<br>1: 270° potentiometer<br>8: activation input (activation with high signal)<br>01: diffuse reflection sensor with background suppression (HT): HG tape (HighGain tape) is not detected from a distance of 900 mm with a set operating range of ≤ 450 mm (diffuse reflection: 6%, black)<br>D: Depolarizing media<br>E: Diffuse reflection sensor with background suppression (HT): optimized for dusty environments<br>SL: Diffuse reflection sensor with background suppression (HT): slit diaphragm 25 mm x 3 mm<br>P: throughbeam photoelectric sensor receiver (LE): edge filter for parallel operation<br>L: Light-band<br>XL: Extra long light spot |
| **H** | **Operating range adjustment & version**<br>n/a with diffuse reflection sensor with background suppression (HT): range adjustment via mechanical adjusting spindle<br>n/a with retro-reflective photoelectric sensors (PRK): operating range not adjustable<br>1: retro-reflective photoelectric sensors (PRK/RK): sensitivity adjustment via potentiometer<br>3: teach-in via button<br>P2: resolution 2 mm |
| **i** | **Switching output/function OUT 1/IN: Pin 4 or black conductor**<br>2: NPN transistor output, light switching<br>N: NPN transistor output, dark switching<br>4: PNP transistor output, light switching<br>P: PNP transistor output, dark switching<br>L: IO-Link<br>G: Push-pull switching output, PNP dark switching, NPN light switching<br>6: push-pull switching output, PNP light switching, NPN dark switching |
| **J** | **Switching output / function OUT 2/IN: pin 2 or white conductor**<br>2: NPN transistor output, light switching<br>N: NPN transistor output, dark switching<br>4: PNP transistor output, light switching<br>P: PNP transistor output, dark switching<br>8: activation input (activation with high signal)<br>9: deactivation input (deactivation with high signal)<br>W: warning output<br>X: pin not used<br>G: Push-pull switching output, PNP dark switching, NPN light switching<br>6: push-pull switching output, PNP light switching, NPN dark switching |
| **K** | **Electrical connection**<br>n/a: cable, standard length 2000 mm, 4-wire<br>200-M12: cable, length 200 mm with M12 connector, 4-pin, axial (plug)<br>M12: M12 connector, 4-pin (plug)<br>500-M12: cable, length 500 mm with M12 connector, 4-pin, axial (plug)<br>1000-M12: cable, length 1000 mm with M12 connector, 4-pin, axial (plug) |

**Note**

↳ A list with all available device types can be found on the Leuze website at www.leuze.com.

# Notes

| | |
|---|---|
| **Observe intended use!** | |
| | ↳ This product is not a safety sensor and is not intended as personnel protection.<br>↳ The product may only be put into operation by competent persons.<br>↳ Only use the product in accordance with its intended use. |

| | |
|---|---|
| **For UL applications:** | |
| | ↳ For UL applications, use is only permitted in Class 2 circuits in accordance with the NEC (National Electric Code).<br>↳ These proximity switches shall be used with UL Listed Cable assemblies rated 30V, 0.5A min, in the field installation, or equivalent (categories: CYJV/CYJV7 or PVVA/PVVA7) |

# Further information

- Light source: Average life expectancy 100,000 h at an ambient temperature of 25 °C
- Response time: For short decay times, an ohmic load of approx. 5 kOhm is recommended

# Accessories

## Connection technology - Connection cables

| | Part no. | Designation | Article | Description |
|---|---|---|---|---|
|  | 50130652 | KD U-M12-4A-V1-050 | Connection cable | Connection 1: Connector, M12, Axial, Female, A-coded, 4 -pin<br>Connector, LED: No<br>Connection 2: Open end<br>Shielded: No<br>Cable length: 5.000 mm<br>Sheathing material: PVC |
|  | 50130690 | KD U-M12-4W-V1-050 | Connection cable | Connection 1: Connector, M12, Angled, Female, A-coded, 4 -pin<br>Connector, LED: No<br>Connection 2: Open end<br>Shielded: No<br>Cable length: 5.000 mm<br>Sheathing material: PVC |

## Mounting technology - Mounting brackets

| | Part no. | Designation | Article | Description |
|---|---|---|---|---|
|  | 50105315 | BT 46 | Mounting device | Design of mounting device: Angle, L-shape<br>Fastening, at system: Through-hole mounting<br>Mounting bracket, at device: Screw type<br>Type of mounting device: Rigid<br>Material: Metal |

# Accessories

## Mounting technology - Rod mounts

| | Part no. | Designation | Article | Description |
|---|---|---|---|---|
|  | 50117252 | BTU 300M-D12 | Mounting system | Design of mounting device: Mounting system<br>Fastening, at system: For 12 mm rod, Sheet-metal mounting<br>Mounting bracket, at device: Screw type, Suited for M4 screws<br>Type of mounting device: Clampable, Adjustable, Turning, 360°<br>Material: Metal |

**Note**

A list with all available accessories can be found on the Leuze website in the Download tab of the article detailed page.