Ambient Temperature Sensor, Model TF41

Modelcode type: **TF41**

Item number: **14080924**

Ambient Temperature Sensor, Model TF41	
Sensor housing	
El. connection	Screw terminals for cables up 1,5 mm²;
Ingress protection [IP]	IP65
Sensor design	
Sun protection	
Mounting accessories	
Operating conditions	
Measuring range	-40 °C ... +100 °C
Ambient temperature	-40 ... +100°C (-40 ... +212°F)
static operating pressure	atmospheric pressure

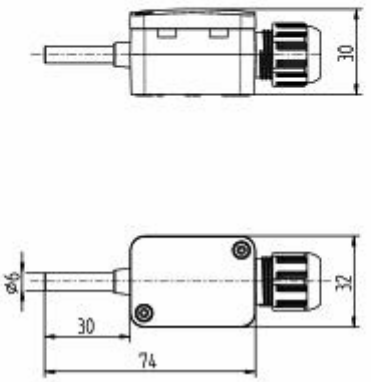

© Copyright by WIKA: Reproduction of this document is prohibited